Council Meeting Agenda
Regular Council Meeting

Monday, April 25, 2022
7:00 p.m.
Virtual Location

This meeting is open to the public and is available through an online platform. Please subscribe to the Township of Wilmot You Tube Channel to watch the live stream or view after the meeting. Delegations must register with the Information and Legislative Services Department. The only matters being discussed at this meeting will be those on the Agenda.

Pages

1. **MOTION TO CONVENE INTO CLOSED MEETING (IF NECESSARY)**
2. **MOTION TO RECONVENE IN OPEN MEETING (IF NECESSARY)**
3. **MOMENT OF SILENCE**
4. **TERRITORIAL ACKNOWLEDGEMENT**
   Councillor J. Gerber
5. **ADDITIONS TO THE AGENDA**
6. **ADOPTION OF THE AGENDA**
   RECOMMENDATION
   That the Agenda as presented for Monday April 25, 2022 be adopted.
7. **DISCLOSURE OF PECUNIARY INTEREST UNDER THE MUNICIPAL CONFLICT OF INTEREST ACT**
8. **MINUTES OF PREVIOUS MEETINGS** 5
   RECOMMENDATION
   THAT the minutes of the following meetings be adopted as presented:

   Special Council Meeting Monday April 4, 2022; and,

   Regular Council Meeting Monday April 11, 2022.
9. **PUBLIC MEETINGS**
10. **PRESENTATIONS**
    10.1. **2021 Audited Financial Statements, COR-2022-16** 197
    Mike Arndt, CPA, CA

RECOMMENDATION
THAT Report COR 2022-016 regarding the 2021 Audited Financial Statements be received for information purposes.

11. CONSENT AGENDA

RECOMMENDATION
THAT Report Nos. COR 2022-18, COR 2002-17, PWE 2022-13, PWE 2022-14 AND PWE 2022-15 be approved.

12.4.1. Infrastructure Standards and Specifications Manual for Public Works and Engineering, PWE-2022-19 289

RECOMMENDATION

THAT Report PWE 2022-19 Infrastructure Standards and Specifications (ISS) Manual for Public Works and Engineering be received for information; and further,

THAT the Infrastructure Standards and Specifications manual as detailed in Report PWE 2022-19, dated April 25, 2022 be endorsed; and further,

THAT the following actions with respect to the Infrastructure Standards and Specifications manual be taken:

i. Staff be directed to utilize the Infrastructure Standards and Specifications manual in the review of municipal consents, development engineering applications and approval and design of capital infrastructure projects.

ii. Staff are provided authority to update the Infrastructure Standards and Specifications manual regularly to ensure it remains current with standards and Township requirements.

13. CORRESPONDENCE

RECOMMENDATION

THAT Correspondence Items 13.1, 13.2, and 13.3 be received for information.

13.1. Town of Gravenhurst - Motion re Floating Accommodations 581

13.2. Town of Gravenhurst - Motion re Russian Sanctions 582

13.3. Town of Gravenhurst - Motion re Year of the Garden 584

14. BY-LAWS

RECOMMENDATION

THAT By-law Nos. 2022-19 be read a first, second and third time and finally passed in Open Council.

14.1. By-Law 2022-19 Final Tax Levy Rates

15. NOTICE OF MOTIONS

16. ANNOUNCEMENTS

17. BUSINESS ARISING FROM CLOSED SESSION

18. CONFIRMATORY BY-LAW

RECOMMENDATION

THAT By-law No. 2022-20 be read a first, second, and third time and finally passed in Open Council.

19. ADJOURNMENT

RECOMMENDATION

THAT we do now adjourn to meet again at the call of the Mayor.

Special Council Meeting Agenda

Special Council Meeting

Date: April 4, 2022, 7:00 P.M.
Location: Virtual Location

Members Present: Mayor L. Armstrong
Councillor A. Hallman
Councillor B. Fisher
Councillor J. Gerber
Councillor J. Pfenning

Staff Present: Chief Administrative Officer, S. Chambers
Director of Corporate Services/Treasurer P. Kelly
Director of Information and Legislative Services/Municipal Clerk D. Mittelholtz
Director of Public Works and Engineering J. Molenhuis
Director of Development Services H. O'Krafka
Manager of Information and Legislative Services/Deputy Clerk T. Murray

---

1. MOMENT OF SILENCE

2. TERRITORIAL ACKNOWLEDGEMENT

Councillor J. Pfenning read the Territorial Acknowledgement.

3. ADOPTION OF THE AGENDA

Resolution No. 2022- 90

Moved by: Councillor J. Pfenning
Seconded by: Councillor B. Fisher

THAT the Agenda as presented for Monday April 4, 2022 be adopted.

Motion Carried

4. DISCLOSURE OF PECUNIARY INTEREST UNDER THE MUNICIPAL CONFLICT OF INTEREST ACT

4.1 Councillor C. Gordijk - Zone Change Application 11/19 Jackson Harvest Farms Ltd. / IBI Group 1894-1922 Witmer Road Report, DS-2022-03

Councillor C. Gordijk declared a conflict of interest due to a family member being an employee of the applicant for Zone Change Application 11/19.

5. REPORTS

5.1 DEVELOPMENT SERVICES

5.1.1 Zone Change Application 11/19 Jackson Harvest Farms Ltd. / IBI Group 1894-1922 Witmer Road Report, DS-2022-03

The delegations are listed in the order in which they registered. The order in which the delegations will be called upon is subject to change to accommodate the technological needs of some delegations. During the delegation portion, the delegation being called upon next will be posted on the virtual meeting screen.

Registered Delegations

- David Sisco (For the Applicant)
- David Bricker
- Robert Gebotys
- David Prong
- Christina Harnack
- Helen Schroeder
- Marilyn Hay
- Rachel Rennie
- Yvonne Fernandes
- Paula Brown
- Rory Farnan
- Ritch Stevenson
- Barbara Schumacher

- Steph Goertz
- Rod Northey
- Stefan Szczerbak
- Ingrid Rosner
- Kevin Thomason
- Mike Balkwill
- Jen Lauzon
- Susan Bryant
- Mary Deitner
- Patricia Chevalier
- Ann Dupej
- Linda Laepple
- Samantha Lernout
- Simone Philpot
- Allan Drost
- Clarke Rieck
- Lori Elash
- Jan Hallman
- Kathy Loree
- Roy Lam
- Matt Rennie
- Dorothy Wilson
- Laverne Forwell
- Kelvin Wood
- Martha Bricker
- Susan Dupej

- Howard Madill
- Joe Gowing
- Ruth Rosner
- Catherine Young
- Ralph Schroeder
- Sue and Arne Kennel
- Joyce Gmach
- Jim Paul and Linda Kress
- John Jordan
- Christine Gray

Councillor C. Gordijk declared a conflict on this item. (Councillor C. Gordijk declared a conflict of interest due to a family member being an employee of the applicant for Zone Change Application 11/19.)

The CAO provided an overview of the history of the application and the process for hearing all delegations and requested that Council reserve their debate until after hearing all delegations.

The Manager of Planning and Economic Development outlined the report.

Mr. David Sisco, Agent and Mr. Rick Esbaugh, Applicant, appeared as a delegation and provided an overview of their application. Mr. Sisco noted that they have fully reviewed the staff report and agree with the recommendation. Mr. Sisco expressed opposition to the public comments against the application, noting that all standards have been satisfied as required and conformity with Region of Waterloo and other agencies requirements has been achieved with the results being that the application meets every threshold.

Samantha Lernout appeared as a delegation, her presentation is attached as Appendix A.

Stefan Szczerback, Planscape, appeared as a delegation, his presentation is attached as Appendix B. In response to a question, he noted that an amendment to the Official Plan Policy may be

required to better review the technical studies of the application. He also noted that the potential impacts on the recycling component of the site and suggested that the applicants apply for the accessory use after an approval of the application.

Scott Manser, ORTECH, appeared as a delegation, his presentation is attached as Appendix C.

Rod Northey, Gowling WLG, appeared as a delegation, his presentation is attached as Appendix D, in response to a question, he noted that he has not seen any documentation to demonstrate conformity to the 2020 Provincial Policy Statement.

The Director of Development Services advised that all questions will be documented, and staff will provide a fulsome response to all questions raised.

Ritch Stevenson appeared as a delegation in opposition to the Hallman Pit relative to the application process of the Hallman Pit and the importance of building public trust in the process.

David Prong appeared as a delegation in opposition to the Hallman Pit relative to the risk to the ground water and wildlife habitat.

David Bricker appeared as a delegation, his written statement is attached as Appendix E.

Martha Bricker appeared as a delegation, her written statement is attached as Appendix F.

Mary Deitner appeared as a delegation in opposition to the Hallman Pit in relation to protection of the agricultural land and drinking water.

Pat Huber appeared as a delegation in opposition to the Hallman Pit in relation to the application and noted that she agreed with comments made by previous delegations.

Murray Huber appeared as a delegation in opposition to the Hallman Pit in relation to the health and safety concerns. His supporting photos are attached as Appendix G.

Lavern Forwell appeared as a delegation in opposition to the Hallman Pit in relation to the historical application approval process and previous prohibitions for access to Witmer Road.

The CAO confirmed that staff will provide Council with a copy of the Cattlelands Agreement.

Christine Gray appeared as a delegation in opposition to the Hallman Pit in relation to the health concerns, air pollution and water protection.

Ingrid Rosner appeared as a delegation, her written statement is attached as Appendix H.

Ruth Rosner appeared as a delegation in opposition to the Hallman Pit in relation to the ground water and private wells, agricultural lands, and carbon emissions. She provided a video showcasing the surrounding area.

Roy Lam appeared as a delegation and noted he strongly opposes the Hallman Pit.

Linda Kress appeared as a delegation in opposition to the Hallman Pit in relation to the impact on the community with ground water concerns as well as dust, noise and traffic.

Jennifer Lauzon appeared as a delegation in opposition to the Hallman Pit in relation to the social impacts of personal property.

Jan Hallman appeared as a delegation in opposition to the Hallman Pit in relation to water protection.

Eric Hodgins appeared as a delegation in opposition to the Hallman Pit in relation to concerns around wildlife and water protection.

Howard Madill appeared as a delegation in opposition to the Hallman Pit in relation to concerns with the water table, noise and dust.

Robert Gebotys appeared as a delegation in opposition to the Hallman Pit in relation to concerns surrounding the agricultural lands and the errors in submitted reports and plans.

Christina Harnack appeared as a delegation, her presentation is attached as Appendix I. She requested an additional Appendix be included as part of her delegation; the letter referenced is attached as Appendix I – Addition.

Helen Schroeder appeared as a delegation, her written comments are attached as Appendix J.

Marilyn Hay appeared as a delegation, her written comments are attached as Appendix K.

Rachel Rennie appeared as a delegation, her written comments are attached as Appendix L. In response to a question, Ms. Rennie advised she would forward further research details to members of Council for their information.

Yvonne Fernandes appeared as a delegation in relation to the Hallman Pit and the responsibilities that elected representatives face with the application.

Paula Brown appeared as a delegation, her written comments are attached as Appendix M.

Rory Farnan appeared as a delegation, his presentation is attached as Appendix N.

Barbara Schumacher appeared as a delegation, her written comment is attached as Appendix O.

Kevin Thomason appeared as a delegation, his written comment is attached as Appendix P.

Mike Balkwill appeared as a delegation, his written comment is attached as Appendix Q.

Susan Bryant appeared as a delegation, her written commit is attached as Appendix R.

Patricia Chevalier appeared as a delegation in opposition to the Hallman Pit in relation to the concerns of the dust and air pollution, emissions, and the health of the community.

Ann Dupej appeared as a delegation in opposition to the Hallman Pit in relation to the negative effects on the drinking water, environmental issues, and dust.

Linda Laepple appeared as delegation, her written comment is attached as Appendix S.

The Municipal Clerk advised that in accordance with the Procedural By-law, the meeting has reached curfew and suggested Council either suspend the meeting or pass a motion to extend the meeting time.

The CAO noted that staff will review the proposed agenda for April 11, 2022, and defer reports where possible.

Council adopted Resolution No. 2022-91 to hear the remaining delegation on April 11, 2022, requesting the applicant attend the meeting on April 11, 2022, and that no new delegations be registered to address Council on this matter.

Mayor L. Armstrong recessed the April 4, 2022, Special Council meeting at 11:04 pm.

Mayor L. Armstrong reconvened the April 4, 2022, Special Council meeting, reiterating that Councillor C. Gordijk has declared a conflict of interest and she is not in attendance at the meeting.

Councillor B. Fisher read the Territorial Acknowledgement.

The CAO provided a reminder to the delegates on time allotments and when possible, reiterate agreement with key points that they share with other delegations.

Simone Philpot appeared as a delegation, she noted she is a researcher on conflict and highlighted observations she has identified through her research.

Allan Drost appeared as a delegation in opposition to the Hallman Pit in relation to water supply, dust and fumes.

Kathy Loree appeared as a delegation, her written comment is attached as Appendix T.

Matt Rennie appeared as a delegation in opposition to the Hallman Pit in relation to the health effects and water supply.

Dorothy Wilson appeared as a delegation, her presentation is attached as Appendix U.

Lori Elash appeared as a delegation, her written comment is attached as Appendix V.

Kelvin Wood appeared as a delegation on behalf of himself and Ed Dupej in opposition to the Hallman Pit in relation to traffic and road concerns, the landscape and tax loss.

Susan Dupej appeared as a delegation in opposition to the Hallman Pit and encouraged Council to stand with the community in not

approving the application in consideration of the risk to the water supply.

Joe Gowing appeared as a delegation in opposition to the Hallman Pit in relation to the reason identified by the community as voiced by the previous delegations.

The Deputy Clerk advised that the registered delegation Catherine Young was not able to attend; however, her written comments are attached as Appendix W.

Ralph Schroeder appeared as a delegation in opposition to the Hallman Pit in relation to the water supply, air quality and health concerns.

The Deputy Clerk advised that the registered delegations Mr. and Mrs. Kennel were not able to attend; however, their written comments are attached as Appendix X.

John Jordan appeared as a delegation, his written comment is attached as Appendix Y.

Claude Fernandes appeared as a delegation in opposition to the Hallman Pit in relation to quality of life for the residents and families.

Michelle Lemire appeared as a delegation in opposition to the Hallman Pit and noted she agrees with all the delegations prior, and concerns about the effects on lifestyle.

Yi Wang appeared as a delegation, her presentation is attached as Appendix Z.

Linda Lundstrom appeared as a delegation in opposition to the Hallman Pit in relation to concerns the effects on water supply, dust and air quality.

Mark Reusser appeared as a delegation; his presentation is attached as Appendix AA.

Joyce Hall appeared as a delegation; her written comment is attached as Appendix BB.

Greg Kaster appeared as a delegation in opposition to the Hallman Pit in relation to traffic impacts and impacts on Huron Road infrastructure.

John Reiner appeared as a delegation in opposition to the Hallman Pit in relation to concerns on the water supply.

Yvonne Zyma appeared as a delegation in opposition to the Hallman Pit and noted that she is in agreement with the previous delegations concerns and also concerns for the wildlife.

Sherri Wollf appeared as a delegation in opposition to the Hallman Pit with concerns of the environmental affects, safety and number of existing pits.

Lisa Fabick appeared as a delegation, her written comments are attached as Appendix CC.

Stephanie Goertz appeared as a delegation in opposition to the Hallman Pit, noting air quality concerns, application process concerns and noted agreement that the previous delegations' comments.

Mayor L. Armstrong advised that he will be voting on the Recommendation and the Municipal Clerk advised that a member of Council has requested a recorded vote.

The Manager of Planning and Economic Development advised they had prepared responses to several questions received through this process from members of Council and the community with regards to:

- Witmer Road Upgrades, Access
- Pit Rehabilitation
- Township Official Plan and the Region of Waterloo Official Plan
- PPS and Growth Plan
- Air Quality
- Wildlife
- Water

The Manager of Planning and Economic Development advised that the Region of Waterloo did consider water supply and private wells and noted that the scientific information provided has adequality addressed concerns and no outstanding questions have gone unanswered.

The Manager of Planning and Economic Development clarified that there was an air quality study completed and identified through the pre-consultation stage, with the results of the study meeting the standards.

The Manager of Planning and Economic Development also noted that studies did conclude there would not be impacts on the ground water and that on-going monitoring and ability to change operational process satisfied the Region of Waterloo through the approval process. He noted that peer reviews that were completed on behalf of the Township and the Region of Waterloo were done by taking both sides of concerns into account.

The Manager of Planning and Economic Development noted that vibration was removed from the process since the operation did not include blasting. He noted the crushing operation was taken into consideration through the noise study to ensure there was not an impact.

Councillor J. Pfenning noted her concerns on potential site remediation back to agricultural use.

In response to questions from Council, Rick Esbaugh noted that the role of recycling asphalt and concrete is important to save the resources and the more recycling that can be done the less gravel is needed. He confirmed that Jackson Harvest Farms is a separate entity. He noted that the site is very clean, and washing may not be needed. Mr. Esbaugh provided an overview of the current pits that have undergone or are underway of being rehabilitated. Mr. Esbaugh noted there is ample capacity for recycling within currently licensed pits. Mr. Esbaugh noted that if the vote is no to the application, he will file an appeal.

The Director of Development Services confirmed that he is unaware of any pit application that has been appealed in the Township and noted that an appeal hearing is not a quick process and finding middle ground on applications to avoid and appeal is ideal.

Councillor B. Fisher raised his concerns for the conflicting information, environmental impacts, and the potential for farming land to be lost. He noted the potential quality of life changes for

residents and for those reasons noted he would be opposing the application.

Mayor L. Armstrong acknowledged the work that has gone into the process by the community, staff, and the applicant. He noted that of all the information he has received only 2 comments in favour have been received from residents and hearing the concerns from citizens makes it clear that any compromise will not lessen their concerns and advised he will not be supporting the application.

The Director of Development Services advised that process questions in terms of defending the Township in an appeal process would be better answered by the Township solicitor. He noted from a staff perspective all reports would be reviewed by the OLT but the professional opinions in those reports would not change.

Councillor J. Gerber proposed amendments to the main motion with regards to removing ashplant and concrete recycling, no crushing beyond what is needed, and no aggregate washing and ask the Province for a sunset clause for this particular pit. However, no member of Council seconded the proposed amendment.

Resolution No. 2022- 91

Moved by: Councillor J. Gerber
Seconded by: Councillor A. Hallman

THAT the remaining delegations relative to Zone Change Application 11/19 for Jackson Harvest Farms Ltd. /IBI Group, 1894-1922 Witmer Road be deferred to the April 11, 2022, Council; and

THAT the applicant attends the Council meeting on April 11, 2022, so as to be able to respond to technical questions that Council might have respecting Zone Change Application 11/19 during their deliberations; and further,

THAT no additional delegations be permitted to register to address Council relative to Zone Change Application 11/19 for Jackson Harvest Farms Ltd. /IBI Group, 1894-1922 Witmer Road on April 11, 2022.

Motion Carried

Resolution No. 2022- 101

Moved by: Councillor J. Gerber
Seconded by: Councillor B. Fisher

THAT Council approve Zone Change Application 11/19 made by Jackson Harvest Farms Ltd. / IBI Group, affecting Part of Lot 10, Concession South of Bleams Road being Part 1, Plan 58R-19981, to rezone the subject lands as follows:

1. in part from Zone 1 (Agricultural) to Zone 14 (Extractive Industrial) with site specific provisions requiring post restoration uses to comply with the terms of the Risk Management Plan 00051 as approved and/or amended by the Region of Waterloo.

2. in part from Zone 1 (Agricultural) to Zone 11 (Open Space) with site specific provisions limiting uses to an Arboretum, Wildlife Sanctuary, and accessory uses.

THAT, prior to the third reading of the implementing zoning by-law, the applicant shall enter into an agreement with the Township of Wilmot to require that, prior to commencement of operations and at no cost to the Township, Witmer Road be reconstructed from Queen Street to just west of the proposed pit entrance to the satisfaction of the Township.

THAT the Township advise the Ministry of Northern Development, Mines, Natural Resources and Forestry that, in addition to comments provided by the Region of Waterloo dated November 30 and December 1, 2021, the following amendments are required in relation to the ARA plans:

1. General Operation Note 2a shall be amended to clarify that, prior to commencement of shipping activities, the pit entrance shall be paved from the limit of asphalt on Witmer Road to, at minimum, the weigh scale and that the weigh scale shall include a grizzly screen at its approach.

2. General Operation Note 2b shall be amended by adding a sentence preceding the current sentence, to indicate that pit traffic will not be permitted west of the entrance on Witmer Road.

3. General Operation Note 2c shall be amended to clarify that the farm-type gated access from Bleams Road shall not be use for

any component of the pit operations and limited to farm access only.

4. General Operation Note 15 shall be amended to align with the peer reviewed noise study as follows:

Site Preparation:	7:00am to 6:00pm Monday to Friday
Excavation / Processing:	7:00am to 6:00pm Monday to Friday
	8:00am to 12:00pm Saturdays
Shipping:	6:00am to 6:00pm Monday to Friday
	6:00am to 12:00pm Saturdays

Against (5): Les Armstrong, Councillor A. Hallman, Councillor B. Fisher, Councillor J. Gerber, and Councillor J. Pfenning

Motion Defeated (0 to 5)

6. CONFIRMATORY BY-LAW

Resolution No. 2022- 102

Moved by: Councillor J. Pfenning
Seconded by: Councillor J. Gerber

THAT By-law No. 2022-16 be read a first, second, and third time, and finally passed in Open Council.

Motion Carried

7. ADJOURNMENT

Resolution No. 2022- 103

Moved by: Councillor A. Hallman
Seconded by: Councillor J. Pfenning

THAT we do now adjourn to meet again at the call of the Mayor.

Motion Carried

APPENDIX A

Special Council Meeting
Re: The Proposed Hallman Pit

April 4th, 2022

CITIZENS FOR SAFE GROUND WATER

COMPATIBLE LAND USE

An existing or committed land use or activity that can co-exist with a neighbouring use/activity or

uses/activities without either creating or experiencing 1 or more off site adverse effect(s)

Source: **D-1-3 Land Use Compatibility: Definitions Government of Ontario**

CITIZENS FOR SAFE GROUND WATER

SENSITIVE LAND USE

APPENDIX A

A building amenity area or outdoor space where routine or normal activities occurring at reasonably expected times would experience 1 or more adverse effects from contaminant discharges generated by a nearby facility. The sensitive land use may be a part of the natural or built environment. Depending upon the particular facility involved, a sensitive land use and associated activities may include one or a combination of :

1. Residences or facilities where people sleep, (eg. Single and multi-dwellings, nursing homes, hospitals, trailer parks, camping grounds, etc). These uses are considered to be sensitive 24 hours/day
2. A permanent structure for non-facility related use, particularly of an institutional nature (eg. Schools, churches, community centres, day care centres)
3. Certain outdoor recreational uses deemed by a municipality or other level of government to be sensitive (eg, Trailer park, picnic area, etc.)
4. Certain agricultural operations (eg. Cattle raising, mink farming, cash crops and orchards).
5. Bird/wildlife habitats or sanctuaries

Adverse effects are defined in the PPS to mean: as defined in the Environmental Protection Act, means one or more of:

a) impairment of the quality of the natural environment for any use that can be made of it;

b) injury or damage to property or plant or animal life;

c) harm or material discomfort to any person;

d) an adverse effect on the health of any person;

e) impairment on the safety of any person;

f) rendering any property or plant or animal life unfit for human use;

g) loss of enjoyment of normal use of property; and

h) interference with normal conduct of business.

CITIZENS FOR SAFE GROUND WATER

Zone of influence

APPENDIX A

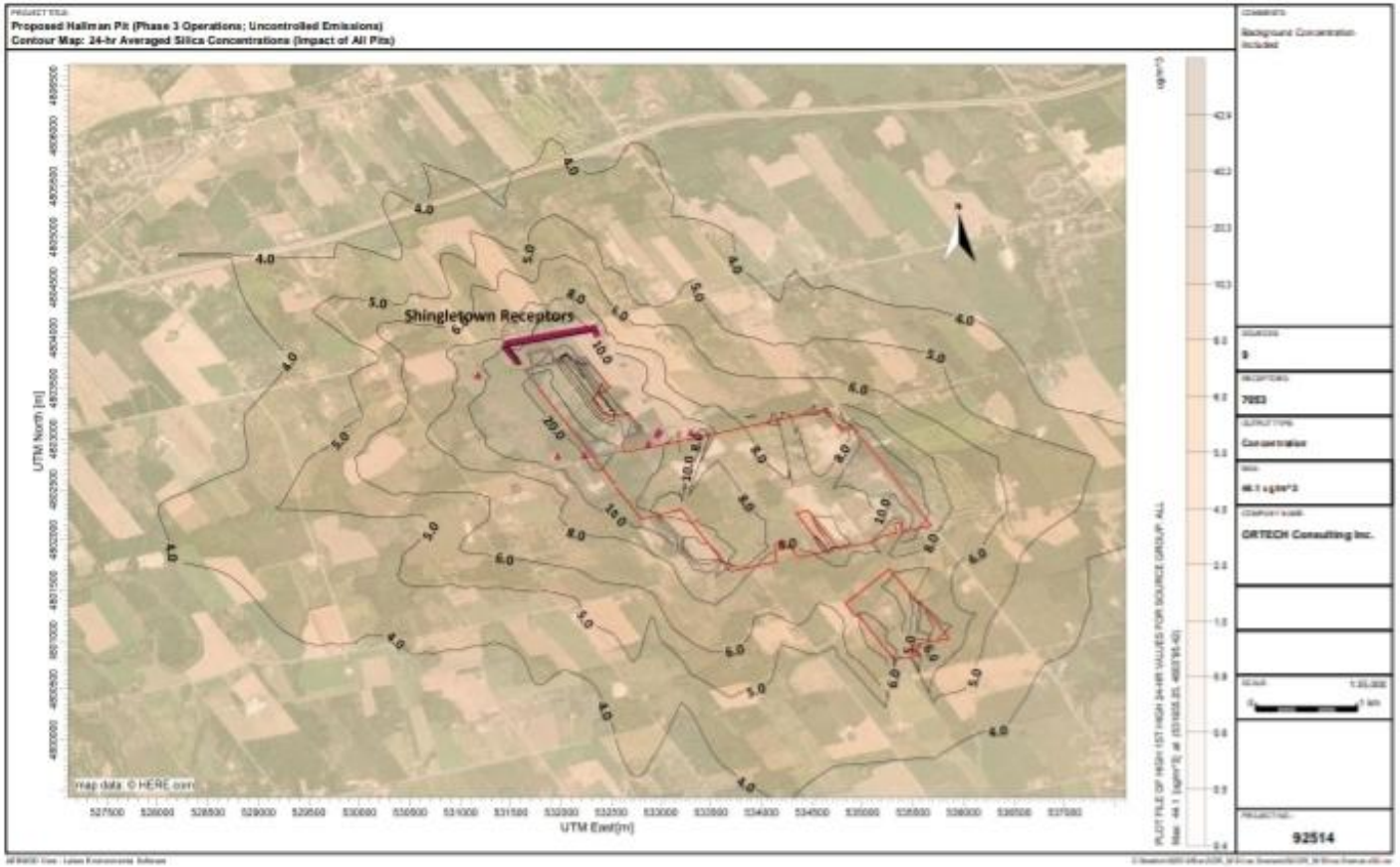

Compatible Land Use?

Sensitive Land Use?

Adverse Effects?

CITIZENS FOR SAFE GROUND WATER

APPENDIX A

POTENTIAL IMPACTS OF THE PROPOSED HALLMAN PIT

CITIZENS FOR SAFE GROUND WATER

CUMULATIVE IMPACTS The combined impact of all 'past, present and future' gravel pits

HEALTH IMPACTS

Increased noise levels due to truck activity, alarms and extraction

Health effects from exposure to harmful fine particulate matter (dust)

Potential for contamination of our drinking water in sensitive recharge areas

ECONOMIC IMPACTS

Safety of operations of proposed traffic impact not satisfied by experts

Questions remain about the feasibility of rehabilitation back to prime farmland between experts

ECOLOGICAL IMPACTS

What impact with the life of the Hallman pit have on the life of the wetland and Woodlots?

Auxiliary activities such as wash ponds can increase risk for groundwater impacts

Operational practices, such as fuel storage and asphalt recycling, can increase risk of pollution

statements made are based on expert reviews commissioned by the Region of Waterloo, Wilmot Township and Citizens for Safe Ground Water Inc., as well as the Grand River Conservation Authority, to date

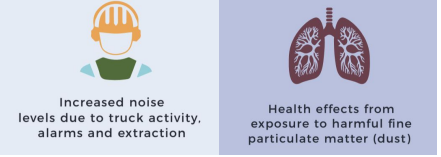

APPENDIX A

CITIZENS FOR SAFE GROUND WATER

Impacts *NOT* addressed

The Hallman Pit sets an ***unacceptable*** *precedent*

There is a need for:

1. Account for **all air emissions** and **all stages** of the pit's life to correctly assess the potential adverse impacts of this proposal
2. proposed air quality impacts **exceeding policy thresholds**
3. Correct **noise** standards and modelling in **Shingletown**
4. Attention to noise impacts along the internal **Haul Route**
5. Cumulative impacts (**7.2.4.3**) must be reviewed by an expert third party

Impacts *NOT* addressed

The Hallman Pit can presents an *unacceptable risk*

There is a need for:

1. Consideration of **safety/operations** at the Witmer Road intersection with Queen Street.
2. Consideration of the **safety** of recreational road users (cyclists, walkers, joggers, motorcyclists, etc.)
3. Consideration of the **SAFETY** (not just operations) of Witmer Road for school buses, waste management, EMS services, hidden driveways/laneways, etc.
4. **Cumulative impacts (7.2.4.3)** Would other gravel pits be permitted to use the newly upgraded Witmer Road?

Questions remain about the feasibility of rehabilitation back to prime farmland between experts

APPENDIX A

CITIZENS FOR SAFE GROUND WATER

Impacts *NOT* addressed

The Hallman Pit can set an ***unsustainable*** precedent

- ❌ "**No** scientific evidence has been presented"
- ❌ "Such evidence, either **does not exist**, or is proprietary (and therefore not available)"
- ❌ "The **missing** information/limitation is **not** described within the DBH Harvest Farms AIA."

https://facility-admin.esolutionsgroup.ca/Uploads/Files/16E7D05A-FC42-4E34-A1EF-8C5C6858A2BF/zca-11-19/updates/PlanningReport_Addendum.pdf

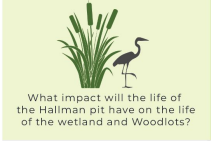

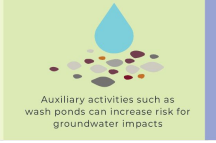

APPENDIX A

CITIZENS FOR SAFE GROUND WATER

Impacts *NOT* addressed

The Hallman Pit can presents an *unacceptable risk*

- ❌ Elimination of all accessory use
- ❌ Enhanced monitoring, logging, testing, reporting, made readily available online
- ❌ Larger buffer between pit floor, and aquifer
- ❌ 24-hour automatic real-time video monitoring on-site
- ❌ Baseline water quality, trigger points, within 1000 meters (per Region policy)
- ❌ Frog, turtle monitoring programs (frogs are sensitive to water quality, excellent indicator species)
- ❌ Holding provision to deter below the water table extraction
- ❌ **Outstanding issues, and recommendations unresolved and not addressed by applicant or Wilmot Staff Report…**

APPENDIX A

CITIZENS FOR SAFE GROUND WATER

Cumulative Impacts (7.2.4.3)

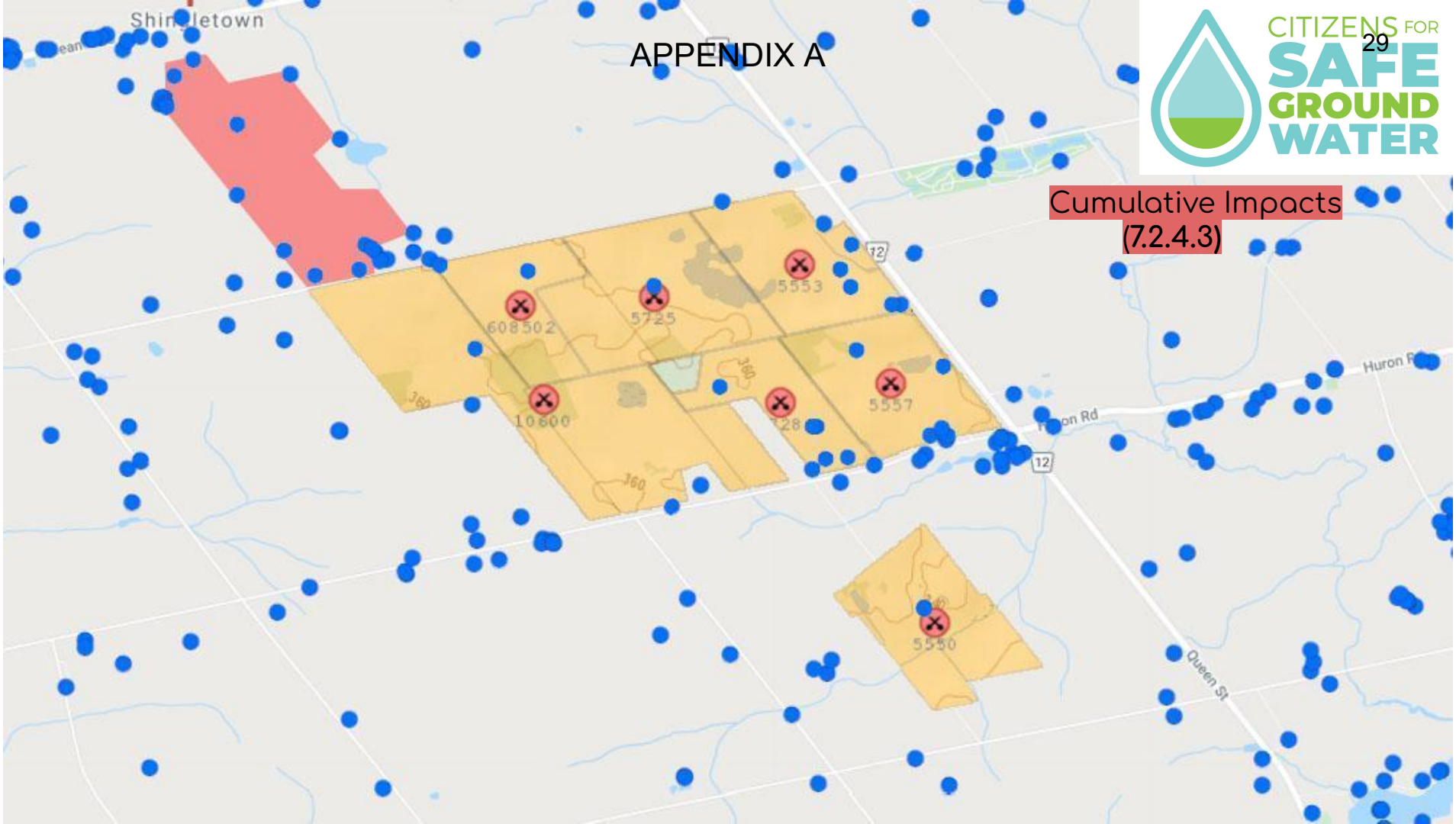

Risk

APPENDIX A

Benefit

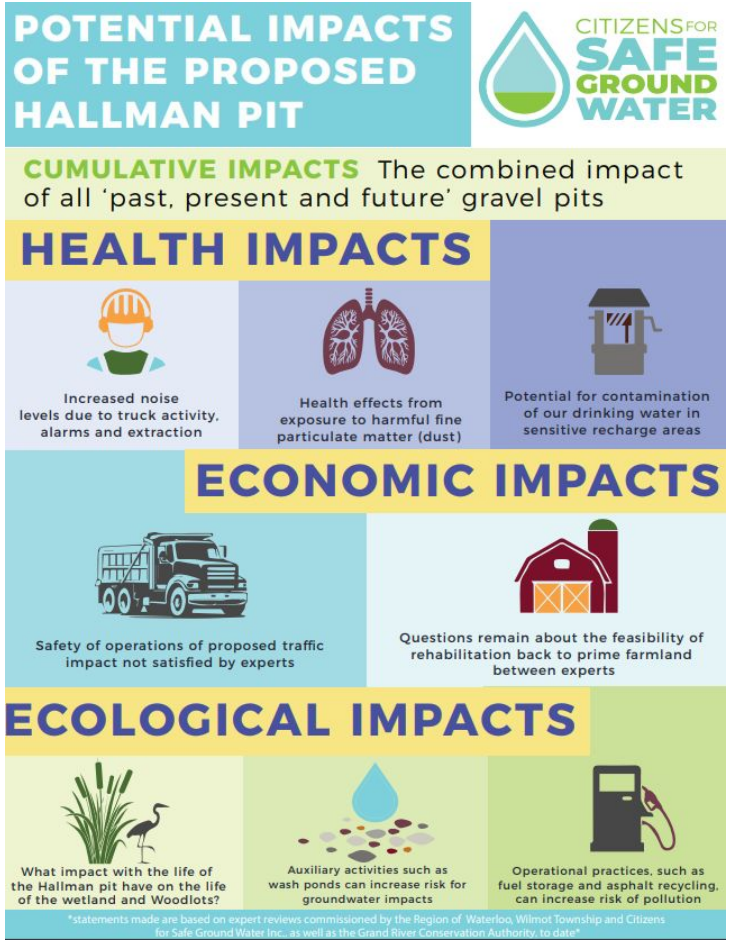

Our Premier, Doug Ford, said, "*I believe in governing for the people…when the people don't want something you don't do it…folks, you are the boss…you don't put something in that the whole community is dead against…the* ***mayor*** *doesn't want it…no one wants it…I don't want it… we are going to make sure that it doesn't happen…*"

CITIZENS FOR SAFE GROUND WATER

CITIZENS FOR SAFE GROUND WATER

Zoning Amendment 11/19

Jackson Harvest Farms Ltd.

1894-1922 Witmer Road

PLANSCAPE
BUILDING COMMUNITY THROUGH PLANNING

LOCATION

APPENDIX B

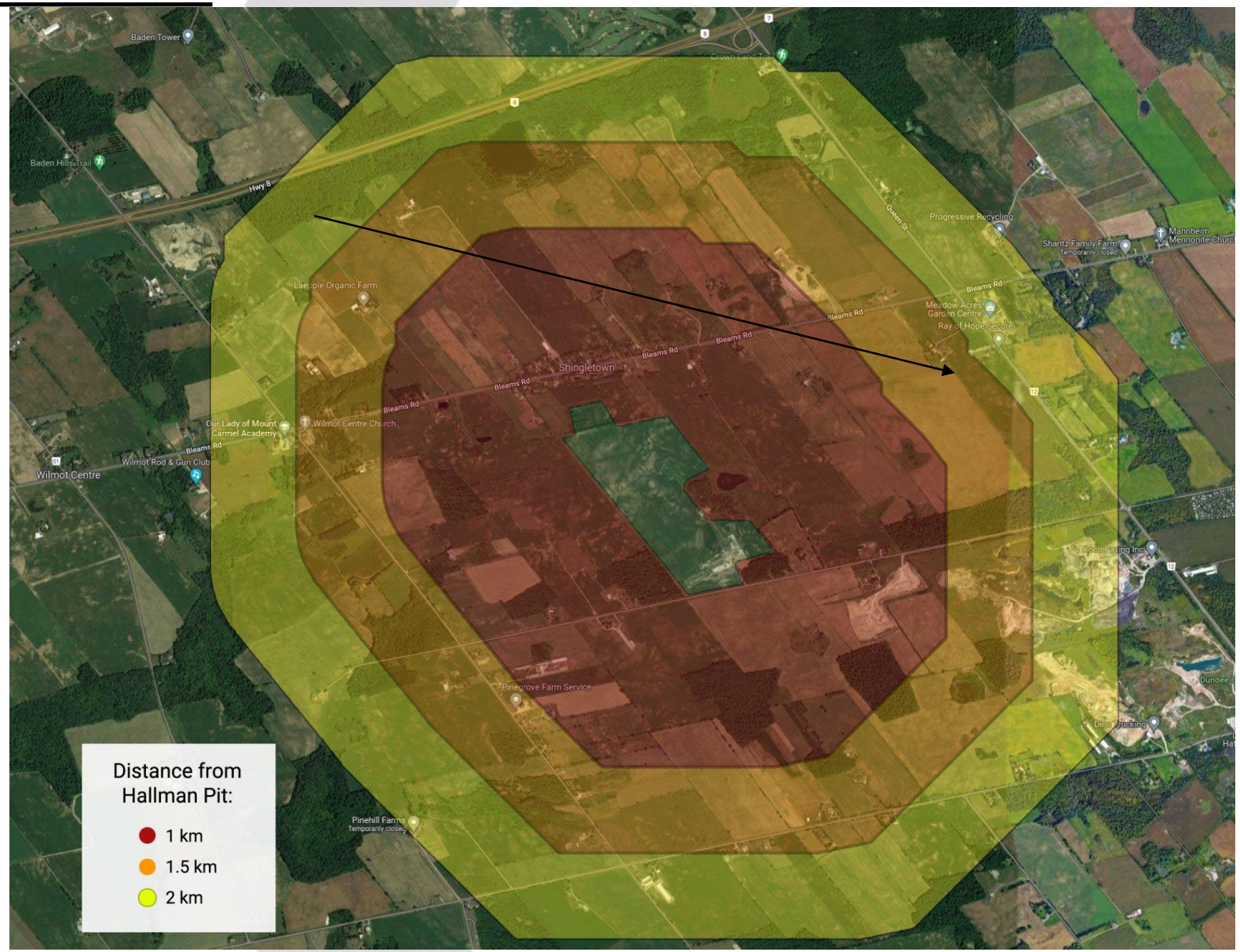

PLANSCAPE
BUILDING COMMUNITY THROUGH PLANNING

APPLICATION & TECHNICAL STUDIES

Zoning Application submitted in December 2019 (Class A, Category 3 gravel pit to include concrete & asphalt recycling use).

- Transportation (PR) **(*)**
- Dust/Air Quality (PR) **(*)**
- Agriculture Impact Assessment (PR) **(*)**
- Natural Environment (CA) **(*)**
- Noise (PR) **(*)**
- Water (PR) **(*)**
- Cumulative Impacts
- Dust (PR) **(*)**

(PR) – peer review

(*) CSGW peer review

PLANSCAPE
BUILDING COMMUNITY THROUGH PLANNING

PLANNING REGIME

Zoning Application submitted in December 2019

Application must be reviewed against the following applicable planning documents:

- 2020 PPS – Must be reviewed against this document regardless of the approval date of an Official Plan and submission of application.
- Growth Plan for the Greater Golden Horseshoe - 2020.
- Region of Waterloo Official Plan – 2013 (Approved in 2015).
- Township of Wilmot Official Plan (Consolidated 2019).

(Aggregate Resources Act) & (Conservation Authority)

PLANSCAPE
BUILDING COMMUNITY THROUGH PLANNING

PLANNING REVIEW – TOP DOWN

2020 PPS – Has not been appropriately reviewed by the applicant and staff.

MY PROFESSIONAL OPINION – Key PPS policies not addressed:

1.2.6 Land Use Compatibility

1.2.6.1 *Major facilities* and *sensitive land uses* shall be planned and developed to avoid, or if avoidance is not possible, minimize and mitigate any potential *adverse effects* from odour, noise and other contaminants, minimize risk to public health and safety, and to ensure the long-term operational and economic viability of *major facilities* in accordance with provincial guidelines, standards and procedures.

2.5.3 Rehabilitation

2.5.3.1 Progressive and final rehabilitation shall be required to accommodate subsequent land uses, to promote land use compatibility, to recognize the interim nature of extraction, and to mitigate negative impacts to the extent possible. Final rehabilitation shall take surrounding land use and approved land use designations into consideration.

2.5.2.2 Extraction shall be undertaken in a manner which minimizes social, economic and environmental impacts.

2.5.4 Extraction in Prime Agricultural Areas

2.5.4.1 In *prime agricultural areas*, on *prime agricultural land*, extraction of *mineral aggregate resources* is permitted as an interim use provided that the site will be rehabilitated back to an *agricultural condition*.

PLANSCAPE
BUILDING COMMUNITY THROUGH PLANNING

PLANNING REVIEW (con't) – Waterloo & Wilmot OPs

MY PROFESSIONAL OPINION – Key OP policies not properly addressed:

- Policies that permit aggregate extraction on Prime Agricultural Areas – subject to meeting several important tests.
  - 7.2.4.1 "….will only be permitted where the studies have been submitted to the satisfaction of the Township, Region and or any other public agency."
  - 6.1.1 – compatibility & protection of natural features/functions, noise, dust, traffic, water, etc.
- Acknowledge new agg. uses are generally permitted in existing designations provided a specific number of significant tests are reviewed and evaluated.

PLANSCAPE
BUILDING COMMUNITY THROUGH PLANNING

TECHNICAL STUDIES

- Applicant's studies do not reference current policies, schedules
  - AIA references former Wilmot OP (2006).
  - No 2020 PPS review.
  - No 2020 Growth Plan review.

- CSGW – conducted several peer reviews of the supporting technical studies AND commissioned their own Environmental & Noise studies.

- Peer review and stand-alone studies contain questions that have not been addressed and provide additional technical data that must be considered within the applicant's supporting review – regardless of the peer reviews conducted by the Region/Township.

MAJOR POLICY GAPS

- Rehabilitation – AIA, Peer Reviews & staff acknowledge a significant issue with meeting the applicable policies of PPS.
- Compatibility between existing sensitive and agricultural uses and new pit operation. Very little technical information related to the recycling operation.
- Cumulative Impacts.
- Technical Reports have not been appropriately commissioned.

CONCLUSIONS

- The proposed **significant** and **long-term** land use has not been properly assessed in accordance with the PPS, Growth Plan, Regional & Local OPs.
- Council does not have the appropriate information in front of them to make an informed decision.
- Gaps in the policy analysis.
- Application is **PREMATURE**. OPA? Remove Recycling Use?

PLANSCAPE
BUILDING COMMUNITY THROUGH PLANNING

FINAL THOUGHTS

PLANSCAPE INC.

Stefan Szczerbak, M.Sc, MCIP RPP
Partner
sszczerbak@planscape.ca
(705) 645-1556

APPENDIX B

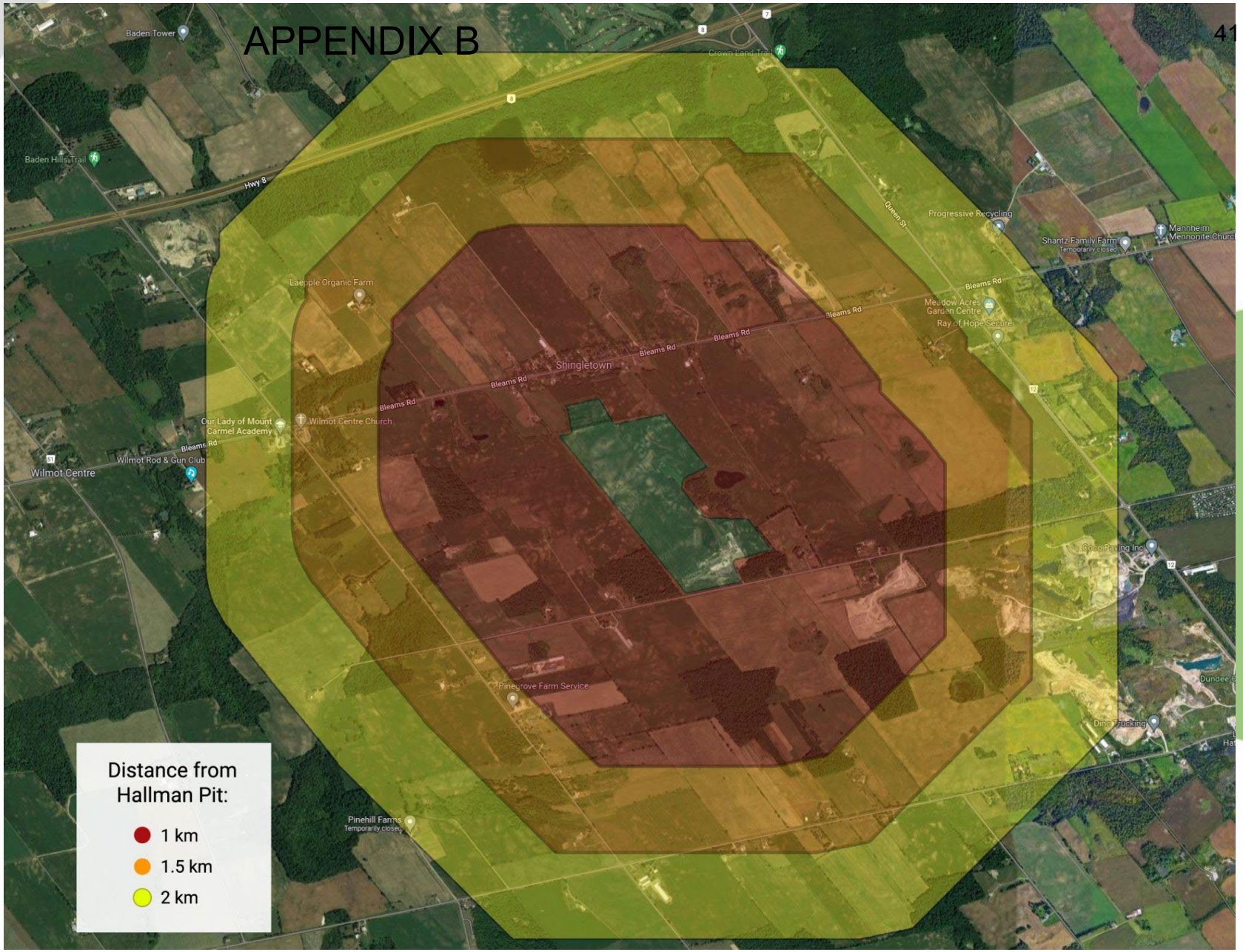

PLANSCAPE
BUILDING COMMUNITY THROUGH PLANNING

ORTECH
a Kontrol Energy Company

Initial Peer Review Comments and Results – Hallman Pit (On behalf of Citizens for Safe Ground Water)

Contaminant	Scenario [1]	Averaging Period	Background Conc. [2] ($\mu g/m^3$)	Air Quality Threshold ($\mu g/m^3$)	Maximum Cumulative Concentration at Sensitive Receptor			
					Impact - All Pits		Impact - Hallman Pit Only	
					Max. Conc. ($\mu g/m^3$)	% of Air Quality Threshold	Max. Conc. ($\mu g/m^3$)	% of Air Quality Threshold
Silica	Phase 2 (Controlled)	24-hour	1.7	5	10.85	217%	7.46	149%
	Phase 2 (Uncontrolled)				21.42	428%	21.42	428%
	Phase 3 (Controlled)				10.94	219%	7.12	142%
	Phase 3 (Uncontrolled)				20.66	413%	20.66	413%
$PM_{2.5}$	Phase 2 (Controlled)	Annual	7.6	8.8	8.65	98%	8.19	93%
	Phase 2 (Uncontrolled)				9.69	110%	9.37	106%
	Phase 3 (Controlled)				8.66	98%	8.11	92%
	Phase 3 (Uncontrolled)				9.49	108%	9.17	104%
$PM_{2.5}$	Phase 2 (Controlled)	24-hour	15	22	18.46	84%	17.36	79%
	Phase 2 (Uncontrolled)				22.22	101%	22.10	100%
	Phase 3 (Controlled)				18.47	84%	17.08	78%
	Phase 3 (Uncontrolled)				21.62	98%	21.46	98%
PM_{10}	Phase 2 (Controlled)	24-hour	28	50	81.91	164%	61.88	124%
	Phase 2 (Uncontrolled)				144.17	288%	144.17	288%
	Phase 3 (Controlled)				82.45	165%	59.87	120%
	Phase 3 (Uncontrolled)				139.73	279%	139.73	279%
TSP	Phase 2 (Controlled)	24-hour	51	120	210.22	175%	147.41	123%
	Phase 2 (Uncontrolled)				410.04	342%	410.04	342%
	Phase 3 (Controlled)				211.98	177%	145.86	122%
	Phase 3 (Uncontrolled)				406.30	339%	406.30	339%

1. Controlled - Emissions from all pits are controlled
   Uncontrolled - Only Hallman Pit emissions are uncontrolled and emissions from all other pits are controlled
2. Background concentration values were adopted from proponent's report
3. Table values represent ORTECH's assessment of publicly available information, which in some cases lacks sufficient detail and professional judgement was required to fill in these data gaps

ORTECH
a Kontrol Energy Company

Initial Peer Review Comments and Results – Hallman Pit (On behalf of Citizens for Safe Ground Water)

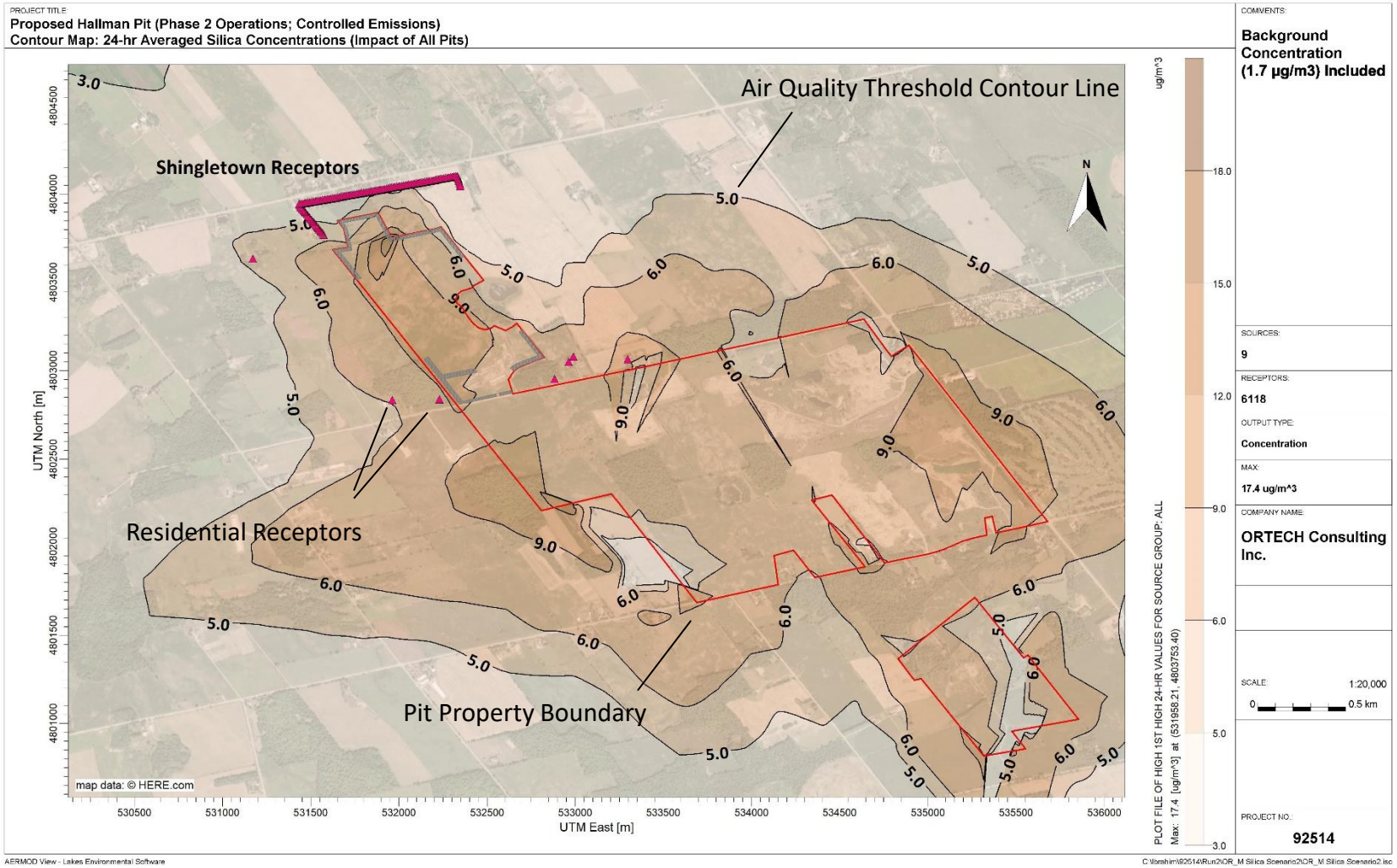

Note: Contributions from other pits assumes emissions are proportional to Hallman. Not all pits are active and contour lines therefore do not reflect current conditions.

ORTECH
a Kontrol Energy Company

Initial Peer Review Comments and Results – Hallman Pit (On behalf of Citizens for Safe Ground Water)

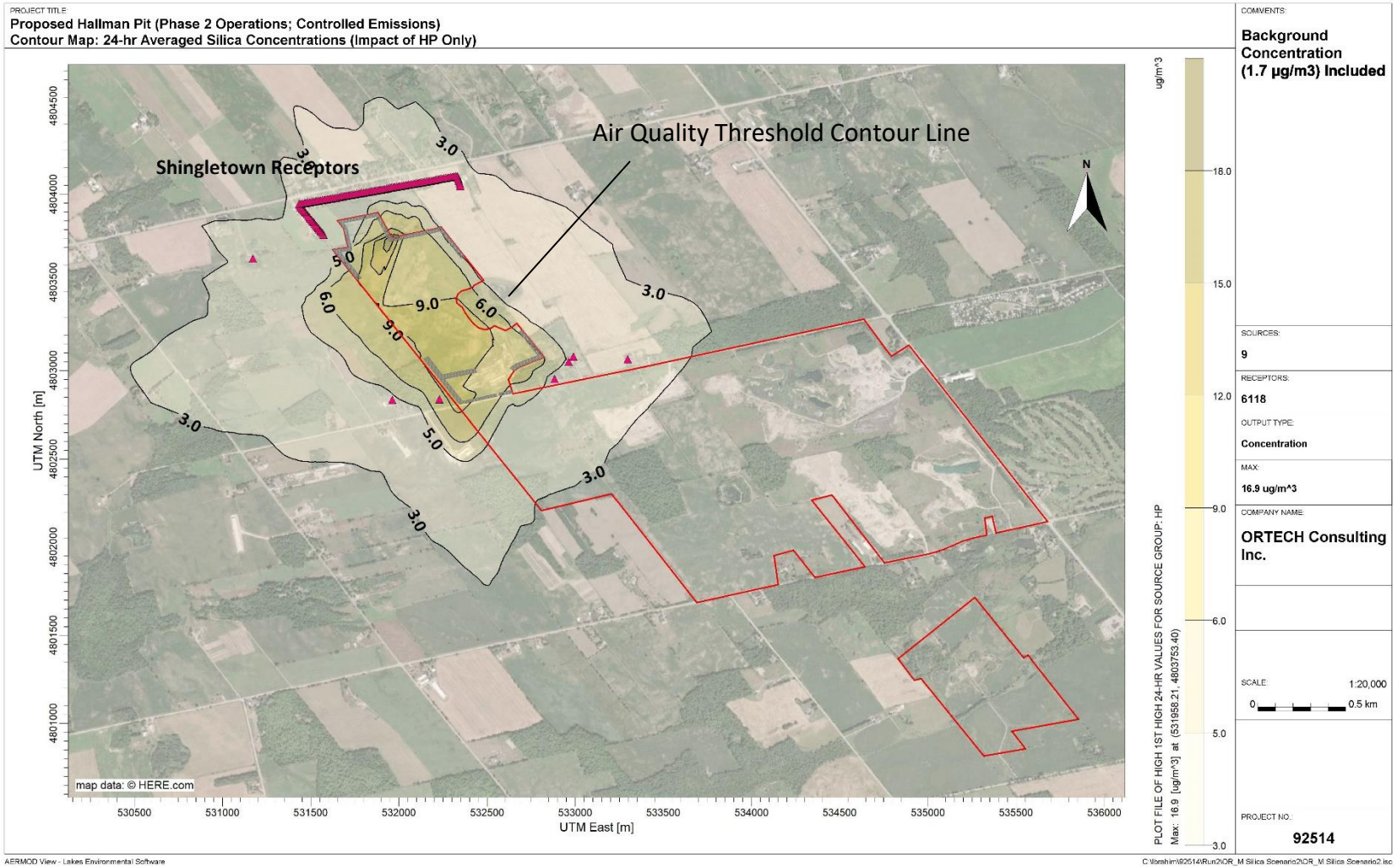

ORTECH
a Kontrol Energy Company

Initial Peer Review Comments and Results – Hallman Pit (On behalf of Citizens for Safe Ground Water)

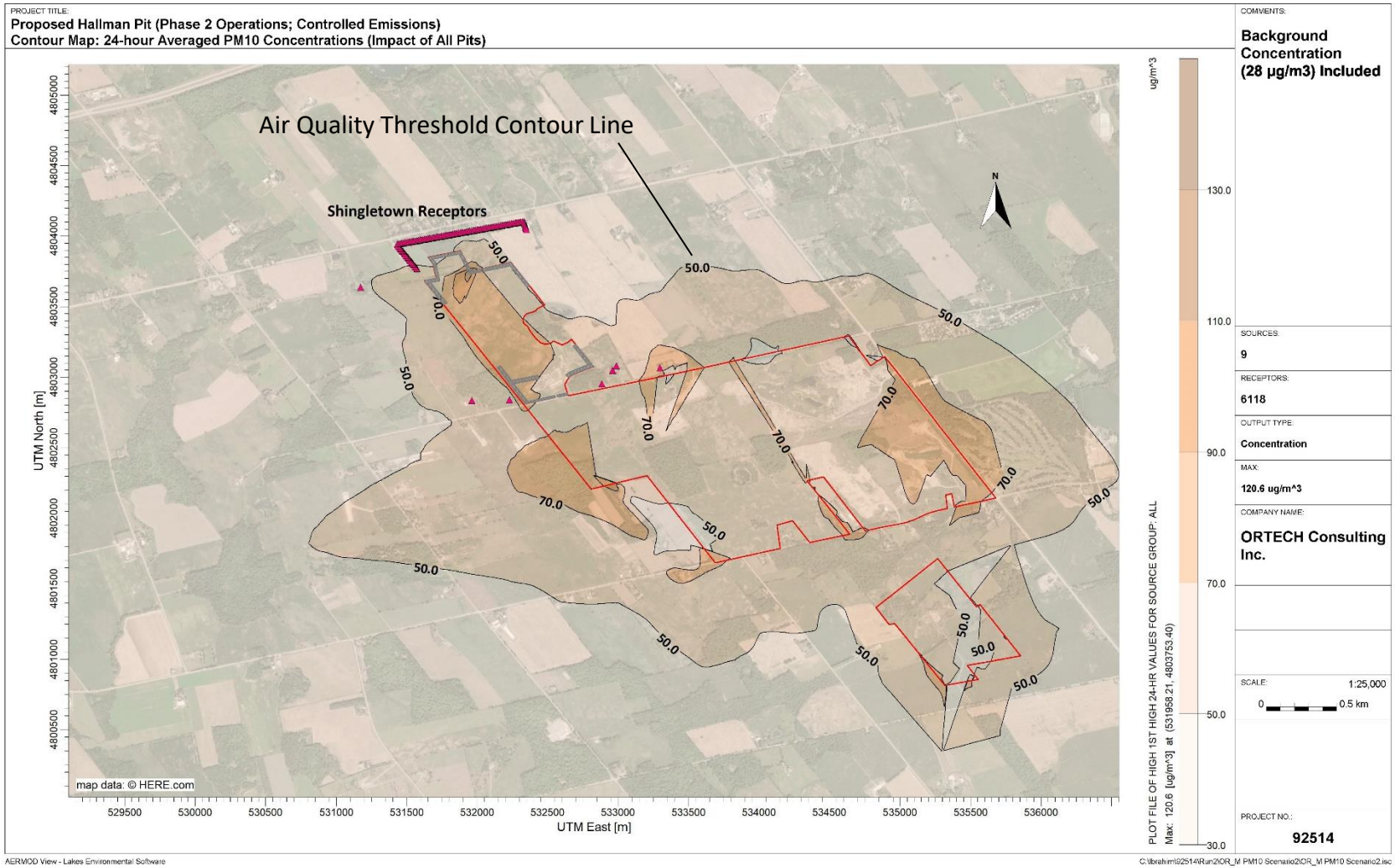

Note: Contributions from other pits assumes emissions are proportional to Hallman. Not all pits are active and contour lines therefore do not reflect current conditions.

ORTECH
a Kontrol Energy Company

Initial Peer Review Comments and Results – Hallman Pit (On behalf of Citizens for Safe Ground Water)

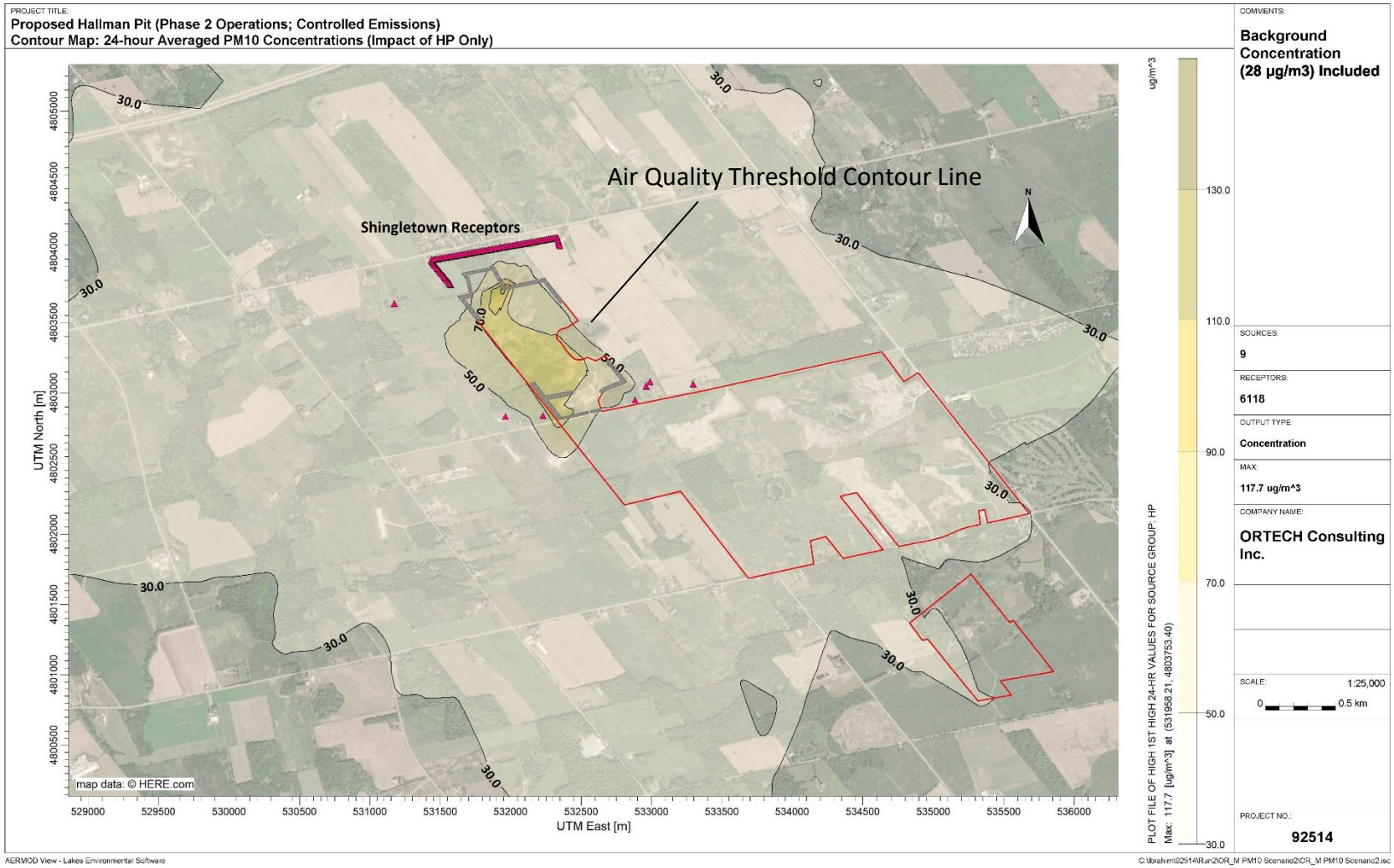

WHAT MUST WILMOT COUNCIL ADDRESS

Proposed Hallman Pit
1894 Witmer Road, Wilmot Township

Rodney Northey, Graham Reeder
Lawyers for Citizens for Safe Ground Water
APRIL 4, 2022

GOWLING WLG

TOPICS

LOSS OF PRIME AGRICULTURAL LAND

Hallman Planning Summary:

- The site is designated by Region and Town Official Plans as part of a ‘prime agricultural area’.

- According to the Hallman reports and peer reviews, there is no scientific basis to demonstrate that the site can be rehabilitated to meet provincial standards (i.e., the Provincial Policy Statement)

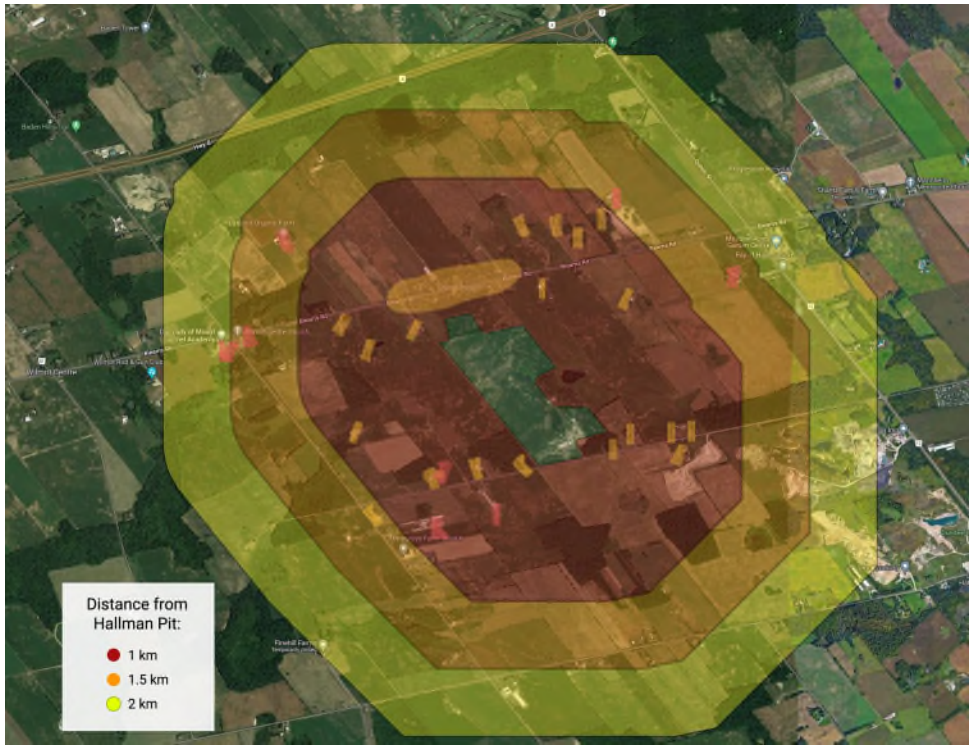

HARM TO THE ENVIRONMENT

Hallman Environmental Impact Statement:

Provincially Protected Features that are on the site or within 120m are:

- Habitat of Endangered or Threatened Species
  - Habitat for *Barn Swallow* and *Bank Swallow*;
- Fish Habitat
- Significant Wildlife Habitat
  - Turtle wintering area (Midland Painted Turtle);
  - Habitat for Species of Special Concern (Eastern Wood-Pewee and Monarch)
- Significant Woodlands

Legend

- Subject Property
- Significant Woodland
- GRCA Wetland
- GRCA -Regulation Limit

HARM TO RESIDENTS (& TAXPAYERS)

- 55 homes within 1 km of the proposed pit
- 8 farm businesses with animals within 1.5 km of the proposed pit

Map:

- Orange marks – Residents
- Orange cluster – Shingletown resident cluster
- Red marks – Farm businesses with animals

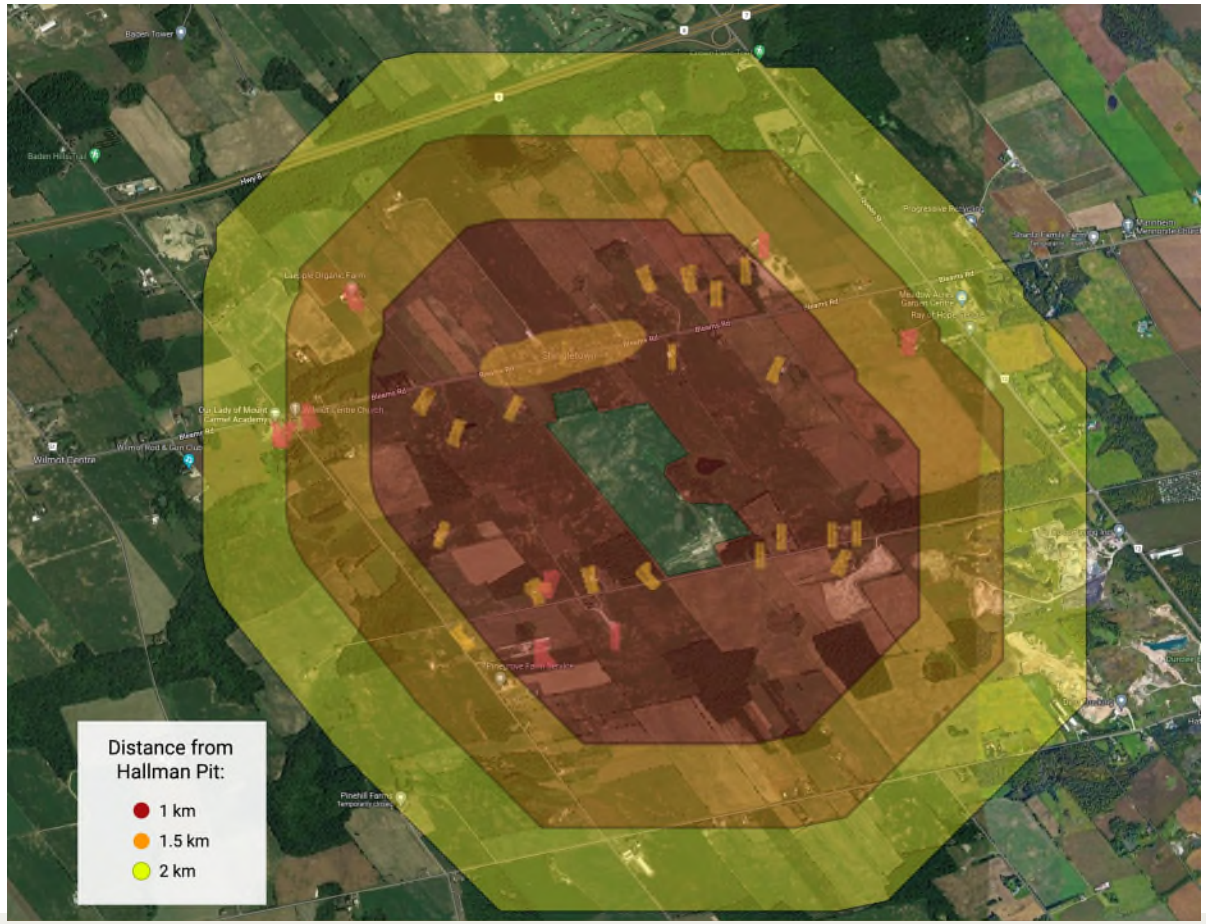

HARM TO RESIDENTS – INCREASED NOISE

Residents' Peer Review of Noise Study:

- Hallman's Noise Study wrongly described the existing noise levels and applied the wrong noise standard

  "The backyards of the residences on Bleams Road north of the gravel pit have been incorrectly assumed to be located in a Class 2 area."

- Hallman's Noise Study did not assess all on-site sources of noise

- Hallman's Noise Study did not meet requirements to assess noise impacts from its haul routes

These errors will understate <u>all</u> noise impacts

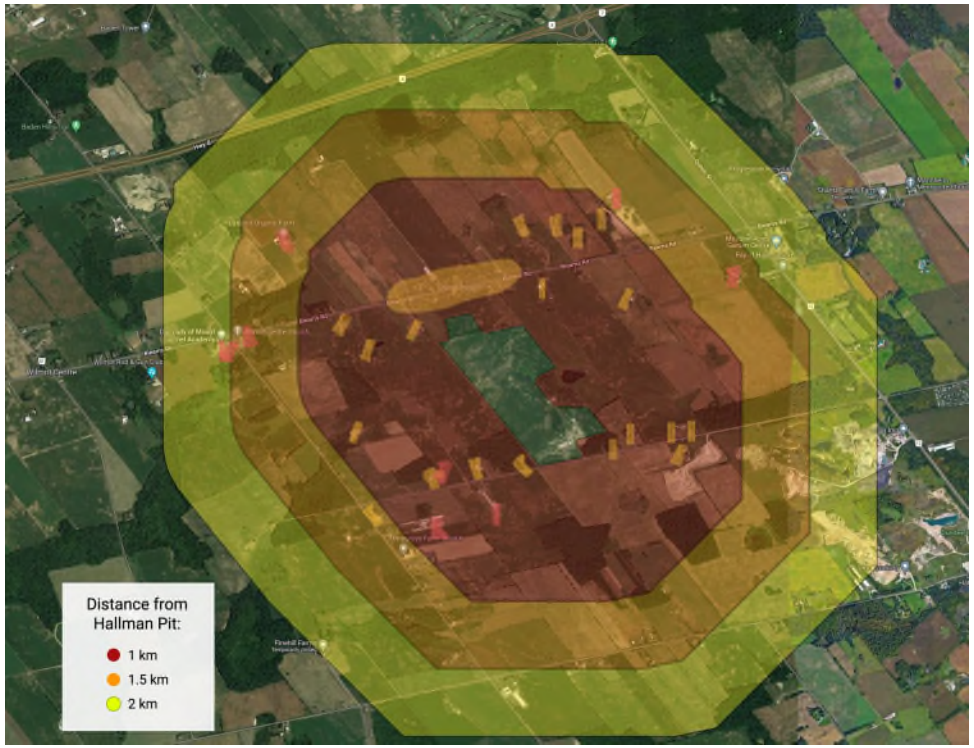

HARM TO THE AIR RESIDENTS BREATHE

Issues with Hallman's Air Quality Report:

- Omitted Emissions: Failure to include all aggregate crushers
- Omitted emissions: NOx emissions from fuel combustion
- Over-valued mitigation: Report presumes 90% dust control efficiency; data supports broad range of efficiencies (high of 77%; low of 12%); lower efficiency is more appropriate
- Over-valued dust shielding: extraction depths varies from 1m to 20m; report uses 20 meter pit depth to model all emissions

These modeling choices will understate <u>all</u> emissions

Key Emissions because of Dust from Pit equipment and trucks:

Silica (carcinogen)

Particulate Matter (10 micrograms or less) – hence, "PM10"

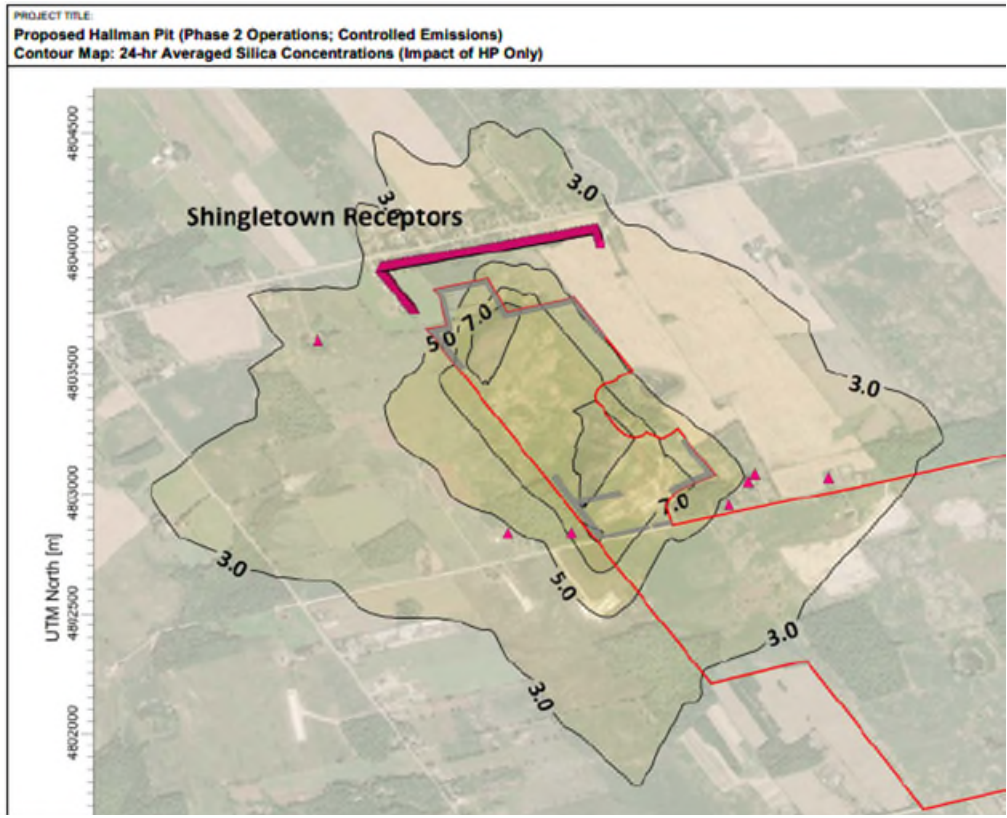

HARM TO HUMAN HEALTH

Human Health Impacts:

- “No safe threshold has been established for human health effects resulting from exposure to particulate matter (PM2.5, PM10). Non-lethal effects of particulate matter and diesel particulate matter can include cardiovascular and respiratory disease.” – Milton Logistics Hub Federal Environmental Assessment Expert Report (p 181)

- “Any increase in ambient particulate matter is associated with a statistical increase in mortality and hospitalization rates.” Environment Canada/Health Canada Priority Substances List Assessment Reprot for Respirable Particulate Matter”

TOWNSHIP COUNCIL IS THE LEAD DECISION-MAKER

Pit approvals are controlled by the most *local* decision-maker

New Aggregate Pits must have local zoning approval

Present zoning does not permit this Pit, so Council must decide to amend its zoning by-law

Zoning is the lead approval - not the Province's aggregate licence, not the Region's Official Plan

***Aggregate Resources Act,* 12.1 (1) No licence shall be issued for a pit or quarry if a zoning by-law prohibits the site from being used for the making, establishment or operation of pits and quarries**

KEY TEST THAT WILMOT COUNCIL MUST *SATISFY*

Council's Decision Must Be "Consistent With" the Provincial Policy Statement

***Planning Act,* s.3(5)**

Policy statements and provincial plans

3(5) A decision of the council of a municipality…in respect of the exercise of any authority that affects a planning matter,

(a) shall be consistent with the policy statements…that are in effect on the date of the decision

Provincial Policy Statement (2020) is the current policy statement

THE ESSENCE OF THE KEY TEST

Does this Pit – a Major Facility – Avoid all potential "Adverse Effects"?

Provincial Policy Statement (2020)

1.2.6.1 ***Major facilities*** and sensitive land uses ***shall be planned and developed to avoid***, or if avoidance is not possible, minimize and mitigate ***any potential adverse effects*** from odour, noise and other contaminants, minimize risk to public health and safety, and to ensure the long-term operational and economic viability of major facilities in accordance with provincial guidelines, standards and procedures.

OTHER TESTS BEFORE WILMOT COUNCIL

The 2020 Provincial Policy Statement also provides other *tests* that apply to Council

Council's Decision must also be "Consistent With" the following policies:

- Healthy, Liveable and Safe Communities (1.1.1)
- Natural Heritage (2.1.1, 2.1.4, 2.1.5-2.1.9)
- Water (2.2.1-2.2.2)
- Agriculture (2.3.1, 2.3.2, 2.3.6.1, 2.3.6.2)
- Mineral Aggregate (2.5.2.1-2.5.2.4, 2.5.3, 2.5.3.2, 2.5.3.3, 2.5.4.1)
- Cultural Heritage (2.6.1-2.6.3)
- Human-Made Hazards (3.2.1-3.2.3)

QUESTIONS?

PRESENTERS

Rodney Northey
Partner
Certified Specialist (Environmental Law)
Rodney.northey@gowlingwlg.com
+1 416 369 6666

Graham Reeder
Associate
Environmental Law
Graham.Reeder@gowlingwlg.com
+1 416 369 7322

APPENDIX D

GOWLING WLG

MEETING. APRIL 4th 2022

ZONE CHANGE APPLICATION 11/19.
JACKSON HARVEST FARMS LTD./IBI GROUP.
1894-1922 WITMER Rd.

MAYOR ARMSTRONG & COUNCIL MEMBERS.
GOOD EVENING, THIS IS MY OBJECTION TO THE AGGREGATE PIT. PROPOSAL. (HALMAND PIT)

THE SAFETY, HEALTH & WELLBEING OF GOOD LAW ABIDING, TAX PAYING, VOTING CITIZENS WILL BE IMPACTED. —
A LOT OF MONEY, TIME & LOVE HAS BEEN PUT INTO FIXING UP THEIR PROPERTIES WILL BE AFFECTED IN A DEVASTATING WAY IF THIS NOT NEEDED AGGREGATE OPERATION IS ALLOWED TO HAPPEN!
I GRADUATED THE ONTARIO FIRE COLLE GRAVENHURST, ONT.
WHERE I LEARNED ALL ABOUT FIRE SUPPRESSION, FIRE RESCUE & ADMINISTRATION

I WAS A FULL TIME FIRE SUPRESION ENGINEER & EMERGENCY RESPONDER - CITY OF WATERLOO FOR 30 yrs.

2

CONT'D.

I DROVE EMERGENCY VEHICLES MANY TIMES THRU TRAFFIC BLOCKED ROADS TO GET TO AN EMERGENCY, VERY CHALLENGING!

IF WITMER ROAD IS CONSTANTLY TRAVELED BY BIG GRAVEL TRUCKS FROM & TO THIS PROPOSED PIT. TRAFFIC WILL BE A NIGHT MERE! GETTING TO A RESIDENCE WHERE HELP IS NEEDED IMMEDIATLY, WERE SECONDS COUNT WILL BE A PROBLEM!

TO LOOSE SOMEONE TO THIS DELAY IS DEVASTATING. TO THE PEOPLE INVOLVED!

- ALSO GETTING TO A FIRE * WERE SECONDS COUNT!

OUR ROAD "WITMER Rd" IS NOT WHAT A TOWNSHIP ROAD IS DESIGNED FOR & NOT IT'S INTENDED USE. "TRUCK VOLUME"

WITMER ROAD IS USED FOR RESIDENCE TO COME & GO + RECREATION & FARM EQUIPMENT. - WALKING ALONG, BIKERS USE & NATURE ENJOYMENT! - SCHOOL BUS ROUTE WITH STOPS!

PROSPECTORS CAN FIND BETTER PLACES TO FING AGGREGATE, & SAFER HAUL ROUTES.

BY THE WAY I HAD MY PROSPECTOR'S LISCENCE.

CONT'D.

TO DESTROY A NATURAL TREASURE WE HAVE IN WILMOT WE ALL KNOW IS NOT RIGHT! IT'S A DELICATE AREA WHICH PRODUCES THE PURE, GOOD, HEALTHY WATER WE ALL NEED. IT'S A DELICATE AREA!

WE ARE THE ONLY CREATURES ON EARTH THAT CAN PROTECT & SAVE OUR PURE DRINKABLE WATER.

THANK YOU ALL FOR LISTENING TO MY PERSONAL CONSERNS!

DAVE BRICKER
1768 WITMER Rd.

SINCE 1975

APPENDIX F

Mayor Armstrong & Council Members

Good Evening. This is my objection to the aggregate pit proposal.

We have lived on Witmer Road for over 40 years and have enjoyed the quiet country life.

I like going for walks along Witmer Road & I would like to take you on a short walk with me.

In the Spring I come across a wall of Lilacs & for 5 minutes as I walk along, I get to enjoy the beautiful fragrance of the Lilacs.

I quite often see deer cross the road and have seen a fox or two as well.

Walking by the woodlot by the entrance of the proposed pit, is like walking through a rain forest. The sounds of all the birds singing is so amazing. A bird-watcher friend took this picture of a rare red headed woodpecker by that woodlot.

The sun rises, and the sunsets are breathtaking as I walk along.

Witmer Road is narrow, with no shoulders, so walking on the road is a must. The few cars I meet slow down, go around me & give a wave as they go by.

I also meet may cyclists on my walk, and a good morning or good evening is always in good order.

As you can see, we live close to the road, and the constant noise & rumble of gravel trucks would be unbearable.

After my walk, being able to sit in the back yard and enjoy the peaceful scenery and wildlife is what country living is all about.

In conclusion, I would not be able to walk along Witmer Road with the gravel trucks flying by every 5 - 10 minutes.

City people drive to the country to walk or cycle. Country people should not have to drive to another road to enjoy a walk.

Thank you for your time,
Martha Bricker
1768 Witmer Rd

WHITE MASONRY CEMENT

CIMENT MACONNERIE BLANC

RISK COMMENT:

- CORROSIVE TO EYE, SKIN AND RESPIRATORY SYSTEM

INDICATION DES RISQUES:

- CORROSIF POUR LES YEUX, LA PEAU ET LE SYSTEME PULMONAIRE

PRECAUTIONARY MEASURES:

- AVOID EYE AND SKIN CONTACT ESPECIALLY WHEN WET
- WEAR FULL CLOTHING WITH LONG SLEEVES
- WEAR SAFETY GLASSES AND GLOVES

MESURES DE PREVENTION:

- EVITER CONTACT AVEC LES YEUX ET LA PEAU PERTICULIEREMENT QUAND HUMIDE
- PORTER DES VETEMENTS POUR PROTECTION COMPLETE
- POETER DES EQUIPEMENTS POUR LA PROTECTION DES YEUX ET DES MAINS

FIRST AID MEASURES:

- IF CONTACT OCCURS, WASH THOROUGHLY WITH WATER WITHOUT DELAY
- WHERE DISCOMFORT PRESISTS, SEEK PROMPT MEDICAL ATTENTION

MESURES DE SECOURS D'URGENCE:

- EN CAS DE CONTACT, BEIN RINCER AVEC DE L'EAU IMMEDIATEMENT
- EN CAS DE MALAISE PERSISTANT, CONSULTER AUSSITOT UN MEDECIN

REFER TO MATERIAL SAFETY DATA SHEET FOR FURTHER INFORMATION:

POUR PLUS D'INFORMATION, CONSULKTER LA FICHE SIGNALETIQUE:

1-800-265-1806

FEDERAL WHITE CEMENT LTD. WOODSTOCK, ONTARIO

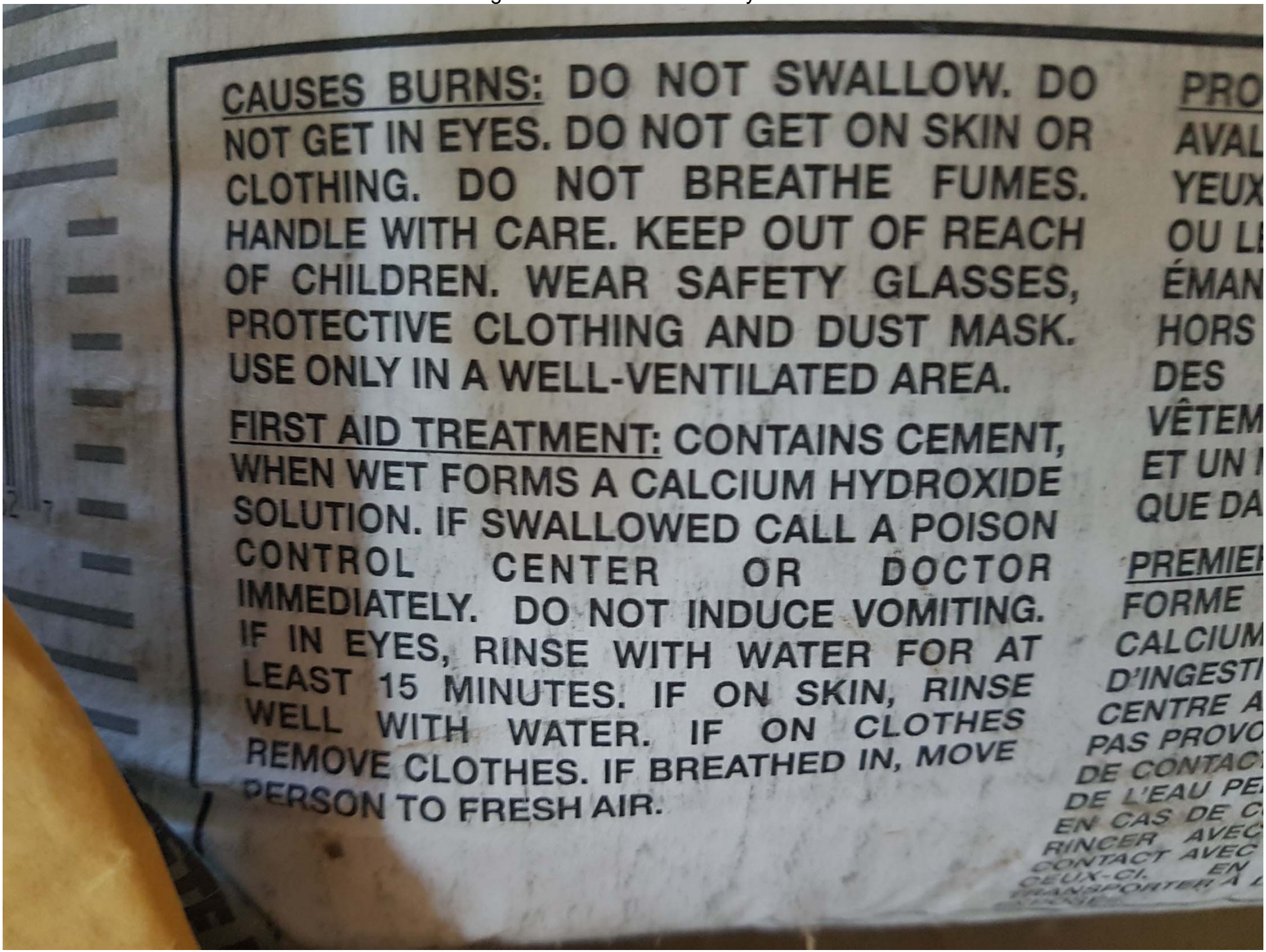

CAUSES BURNS: DO NOT SWALLOW. DO NOT GET IN EYES. DO NOT GET ON SKIN OR CLOTHING. DO NOT BREATHE FUMES. HANDLE WITH CARE. KEEP OUT OF REACH OF CHILDREN. WEAR SAFETY GLASSES, PROTECTIVE CLOTHING AND DUST MASK. USE ONLY IN A WELL-VENTILATED AREA.

FIRST AID TREATMENT: CONTAINS CEMENT, WHEN WET FORMS A CALCIUM HYDROXIDE SOLUTION. IF SWALLOWED CALL A POISON CONTROL CENTER OR DOCTOR IMMEDIATELY. DO NOT INDUCE VOMITING. IF IN EYES, RINSE WITH WATER FOR AT LEAST 15 MINUTES. IF ON SKIN, RINSE WELL WITH WATER. IF ON CLOTHES REMOVE CLOTHES. IF BREATHED IN, MOVE PERSON TO FRESH AIR.

PRO
AVAL
YEUX
OU L
ÉMAN
HORS
DES
VÊTEM
ET UN
QUE DA

PREMIE
FORME
CALCIUM
D'INGESTI
CENTRE A
PAS PROVO
DE CONTAC
DE L'EAU PE
EN CAS DE C
RINCER AVEC
CONTACT AVEC
CEUX-CI. EN
TRANSPORTER A

plastic sheeting. Curing should be continued for a period of five days in warm weather [75 °F (21 °C) or higher] or seven days in cold weather [50 °F to 70 °F (10 °C to 21 °C)]. Curing with plastic

béton est durcie mais
utiliser de produits de
inférieures à 10 °C (50
ou à la fin de l'automn
seront utilisés pour fai

QUIKRETE.COM Do-It-Yourself doesn't mean

IDEAS • ADV

First Aid / Premiers Soins:

Important! Read before using. WEAR IMPERVIOUS GLOVES, such as nitrile.
DANGER – CORROSIVE: CAUSES SEVERE SKIN BURNS AND SERIOUS EYE DAMAGE. M
allergic skin reaction. Portland cement can cause dermatitis or sensitization. Do not mi
chemical products. Do not swallow. Do not get in eyes or on skin or clothing. Dust may caus
irritation. Causes damage to lungs through prolonged or repeated inhalation. Handle wit
safety glasses. Wash thoroughly after handling. Use only in a well-ventilated area. Do not
Wear a CSA approved respirator (mask), such as N95, in poorly ventilated areas, when us
when used for extended periods or when permissible exposure levels may be exceeded.

IRST AID TREATMENT: This product contains silica sand, portland cement and may c
wallowed, call a Poison Control Centre or doctor immediately. Rinse mouth and do not i
in eyes, rinse with water; remove contact lenses if easy to do; continue rinsing for up to
in, rinse well with water. If on clothes, remove clothes. You cannot rely on pain to ale

APPENDIX H

Mayor Armstrong, Councillors and residents across Waterloo Region

My family and I could choose to move from Shingletown but then the possibility of the Hallman Gravel pit becomes someone else's problem, someone else's health risk. I know that a house does not make a home and we could create a home somewhere else. But the house we live in in Shingletown is a treasure given to us by my parents. They also live in Shingletown so we are three generation residents. My parents for thirty years, my husband and I for twenty years and my children have lived here their whole lives. You see my father is a master carpenter and spent the better part of seven years building our two houses and customizing each part. When my father sees a piece of wood, he sees his next project. He comes from a generation who show their love through how they provide for you. If we were to move, we could not take this door with us,(page one) we could not take these floors with us (page two) and we could not move this ceiling (page three). We can't move the tree house that my children grew up on and the neighbours now enjoy (page four). We hope that this house will long be in our family. If you ask other residents of Shingletown about why they choose to live here they will have their own reasons. Starting out as a new family or retiring here after a lifetime of work. This space brings us solitude, especially during these past two years.

After talking about my father's legacy, I'd like to talk about council's legacy. You see we all have a **common** threat that we need to address and it's the climate crisis. We don't have the **luxury** of leaving this hard work to the next council or the next election. We need to decide now how to lower our green house emissions and protect our natural resources. **Climate Action Waterloo Region** has their 80 by 50 mandate which means reducing greenhouse emissions 80% by 2050. Wilmot Council's **Sustainability Working Group** participates in this initiative. There is good news here! Wilmot council has already reduced the township's greenhouse emissions by 30% which is highly commendable. We need to consider the remaining 50% reduction. The sooner we accomplish this goal the better for lowering the temperature of the planet, the more we can inspire change in other communities and stall this climate crisis.

Here are ideas discussed by **Climate Action Waterloo Region** listed in their Transform Waterloo Region Strategy. Strategy 5.1 on page 59 states Protect agricultural land and the local agricultural system. Waterloo Region has been a long-time leader in the development and implementation of land use planning protections for **prime agricultural land**. This protection is a continued priority for community members, those in the agricultural industry, and municipalities, and these policies must continue to be strong. Strategy 5.2 Diversify and strengthen the local agri-food sector with a focus on serving local food needs. Supporting and continuing to build our agricultural and agri-food industry can increase the amount of food that we grow, make, and consume locally. This significantly reduces the energy needed to transport food into and out of the region. Just like keeping aggregate resources close to the intended market reduces greenhouse gas emissions, so to does keeping food close at hand. Supporting our local agricultural community directly contributes to strengthening our local economy, and increases our resilience by reducing our reliance on international supply chains.

I would like to thank Wilmot Council for their time and consideration of this zone change application and the effects on Wilmot Township. In the Wilmot.ca photo galleries, I see farmland in all it's seasons,

sunsets and skies. There is water and even a quaint photo of a true country road called Witmer Road. These represent Wilmot for my family too.

Remember we are in a Climate Emergency even more so than when Wilmot Council declared that in September 2019.

Remember this property is zoned Prime Agricultural Land and

you can deny the application, as stated by David Sisco who represents Jackson Harvest Farm, back in January 2020.

Remember Wetlands are wetlands no matter where in Wilmot Township and

this is your legacy and mine.

I would like to close with a quote from Izabella Teixeira, former environment minister of Brazil who spoke about the climate emergency with the United Nations: “Currently decisions are being based on the past but we need to base them on the future. That means leadership.”

I look forward to your decision and your leadership.

Thank you

Why I Object to the Hallman Pit

Christina Harnack

Spring 2022

APPENDIX I

Wilmot Region-Our community for generations to come

I object to the Hallman pit for several reasons.

I am concerned about:

- Our Water Safety
- Toxic Pollution affecting Noise and Air quality
- The Well-Being of Others
- Negative Effects on the Environment
- Climate Change
- Our Physical and Mental Health

APPENDIX I


POTENTIAL IMPACTS OF THE PROPOSED HALLMAN PIT
CITIZENS FOR SAFE GROUND WATER
CUMULATIVE IMPACTS The combined impact of all 'past, present and future' gravel pits
HEALTH IMPACTS
Increased noise levels due to truck activity, alarms and extraction
Health effects from exposure to harmful fine particulate matter (dust)
Potential for contamination of our drinking water in sensitive recharge areas
ECONOMIC IMPACTS
Safety of operations of proposed traffic impact not satisfied by experts
Questions remain about the feasibility of rehabilitation back to prime farmland between experts
ECOLOGICAL IMPACTS
What impact with the life of the Hallman pit have on the life of the wetland and Woodlots?
Auxiliary activities such as wash ponds can increase risk for groundwater impacts
Operational practices, such as fuel storage and asphalt recycling, can increase risk of pollution
statements made are based on expert reviews commissioned by the Region of Waterloo, Wilmot Township and Citizens for Safe Ground Water Inc., as well as the Grand River Conservation Authority, to date

APPENDIX I

The Danger of Fine Particulate Matter

- Fine Particulate Matter is related to increases in:
  - cardiopulmonary disease
  - asthma, bronchitis, emphysema,
  - and premature death in those with pre-existing conditions.
- Crystalline silica dust is common from processing sand and gravel and is a known carcinogen.

The Danger of Fine Particulate Matter

- Diesel emissions contain Fine Particulate Matter that can enter our bloodstream
  - Fine Particulate Matter is smaller than a red blood cell!

- Diesel emissions in our community will increase with the Hallman Pit with a proposed 1-2 trucks per minute.
- Diesel engine exhaust is “carcinogenic to humans” and linked to lung cancer and bladder cancer (Evidence from the International Agency for Research on Cancer (IARC))

APPENDIX I

The Danger of Fine Particulate Matter

- As a result of increased exposure to Fine Particulate Matter, Lancet Planetary Health, using data from U.S. and Ontario and published in 2020, identifies :
  - Impaired cognitive function
  - Accelerated cognitive decline
  - Parkinson’s disease, Alzheimer's disease
  - Dementia

.

- The Global Burden of Disease, Injuries and Risk Factors Study in 2016 outlines the increase of neurodegenerative diseases and premature death connected to Fine Particulate Matter.

- Fine Particulate Matter is related to increases in cardiopulmonary disease, asthma, bronchitis, emphysema, and premature death in those with pre-existing conditions.

- Seniors and young children are the most at risk with increased exposure to Fine Particulate Matter.

APPENDIX I

Accessory Use - Wilmot Official Plan

ACCESSORY PROPERTY USE

Do auxiliary aggregate activities pose an unnecessary risk to sensitive recharge areas?

The Township will regulate uses associated with aggregate extraction through the Zoning By-law as follows:

a) permit *accessory uses* associated with aggregate extraction operations and processing activities such as crushing, screening, washing, stockpiling, blending with recycled asphalt or concrete materials, storage, weigh scales, parking and office facilities;

Source: Township of Wilmot Official Plan – April 2019 Consolidation - 7.1.1.7

Wilmot Council has the <u>ability</u> to mitigate risk:

- ❌ **No** 'Wash Ponds' on-site
- ❌ **No** Used asphalt/concrete stockpiling, reprocessing.
- ❌ **No** Fuel storage on-site

Note: Applicant has proposed these activities take place in a **"Sensitive Recharge Area"**

TOWNSHIP OF WILMOT

MEDIA RELEASE

Wilmot Township Council Approves Climate Emergency Declaration

Baden, ON - At the September 23rd Council meeting, the Township of Wilmot took another solid step forward in continuing its efforts to promote sustainability by joining government agencies in the declaration of a climate emergency.

Over the past few months, Kai Reimer-Watts and Andreas Fuentes from the Climate Emergency Declaration Group Waterloo Region have been working with area municipalities on formulating resolutions in support of the Climate Emergency Declaration.

Data provided by Mr. Reimer-Watts and Mr. Fuentes indicates that municipalities are significant contributors to climate change, consuming more than 2/3 of the world's energy and accounting for more than 70% of its carbon emissions.

The Township of Wilmot has an absolute Green House Gas (GHG) emissions target reduction of 25% from 2012 levels by 2027, and has already reduced its GHG emissions by approximately 19.6% or 330 tons since 2012.

APPENDIX I

“The Township of Wilmot has an absolute Greenhouse Gas (GHG) emissions target reduction of 25% from 2012 levels by 2027”.

APPENDIX I

The decision on this rezoning in a Source Water protected area will be precedent setting.

To date, there has not been a gravel pit approved for rezoning in a Source Water Protected Area.

This precedent decision comes with great responsibility and could open the potential of other protected areas to also be negatively impacted and exploited.

APPENDIX I

Regional Official Plan:

Wilmot Region is identified as Regional Recharge Area

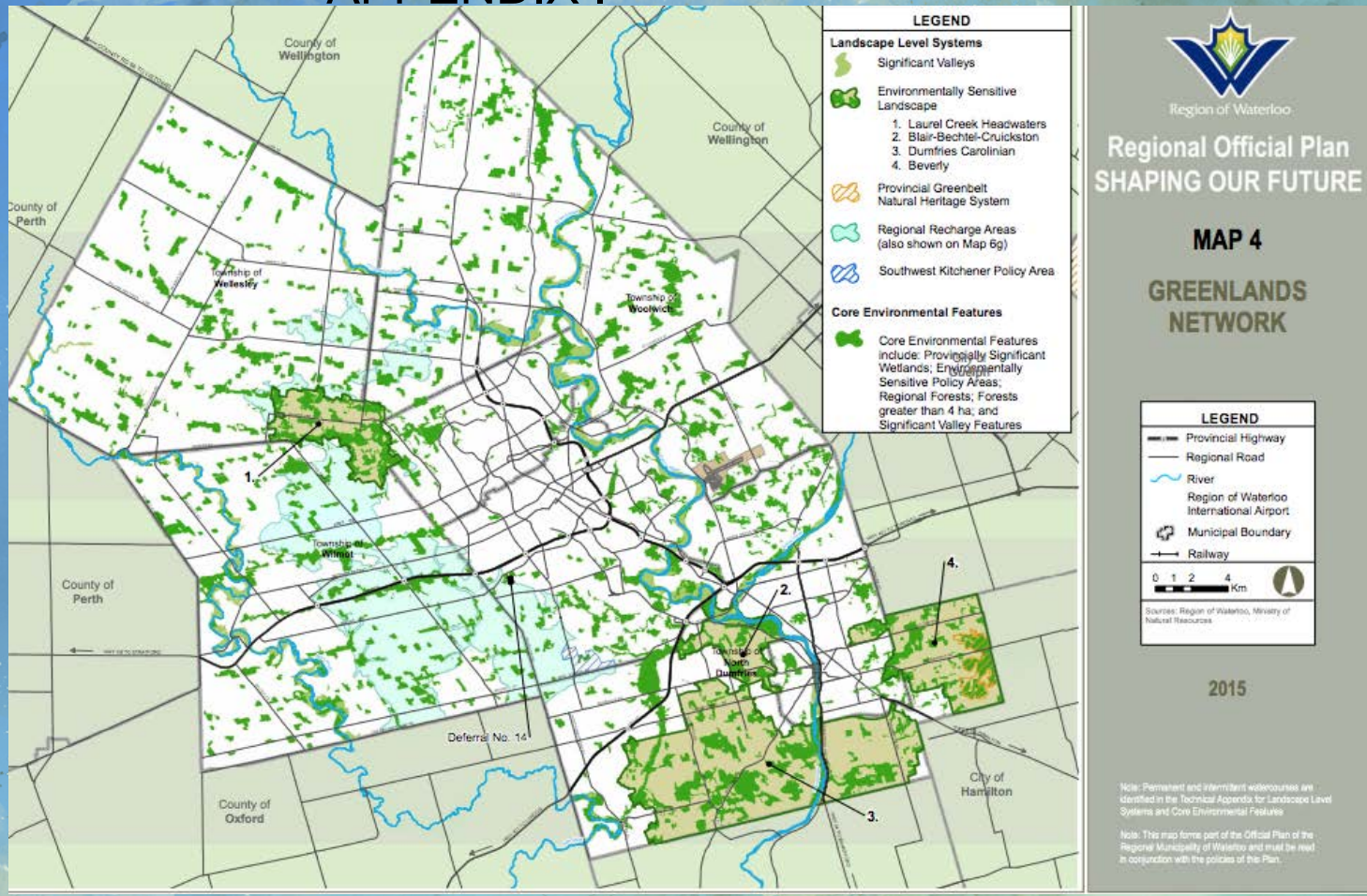

APPENDIX I

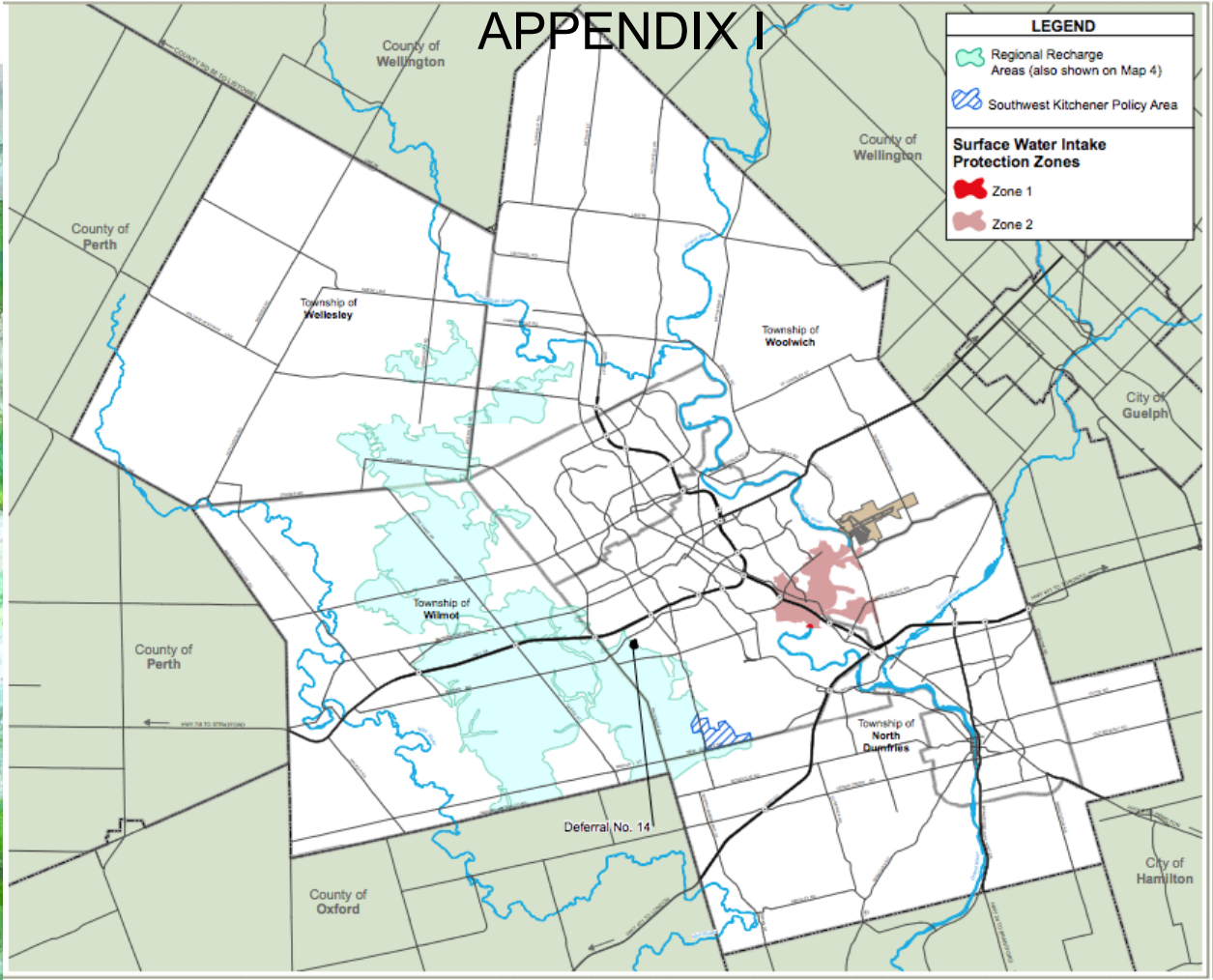

Region of Waterloo

Regional Official Plan
SHAPING OUR FUTURE

MAP 6g

OTHER SOURCE WATER PROTECTION AREAS

LEGEND

- Provincial Highway
- Regional Road
- River
- Region of Waterloo International Airport
- Municipal Boundary
- Railway

0 1 2 4 Km

Sources: Region of Waterloo

2015

Note: This map forms part of the Official Plan of the Regional Municipality of Waterloo and must be read in conjunction with the policies of this Pan.

APPENDIX I

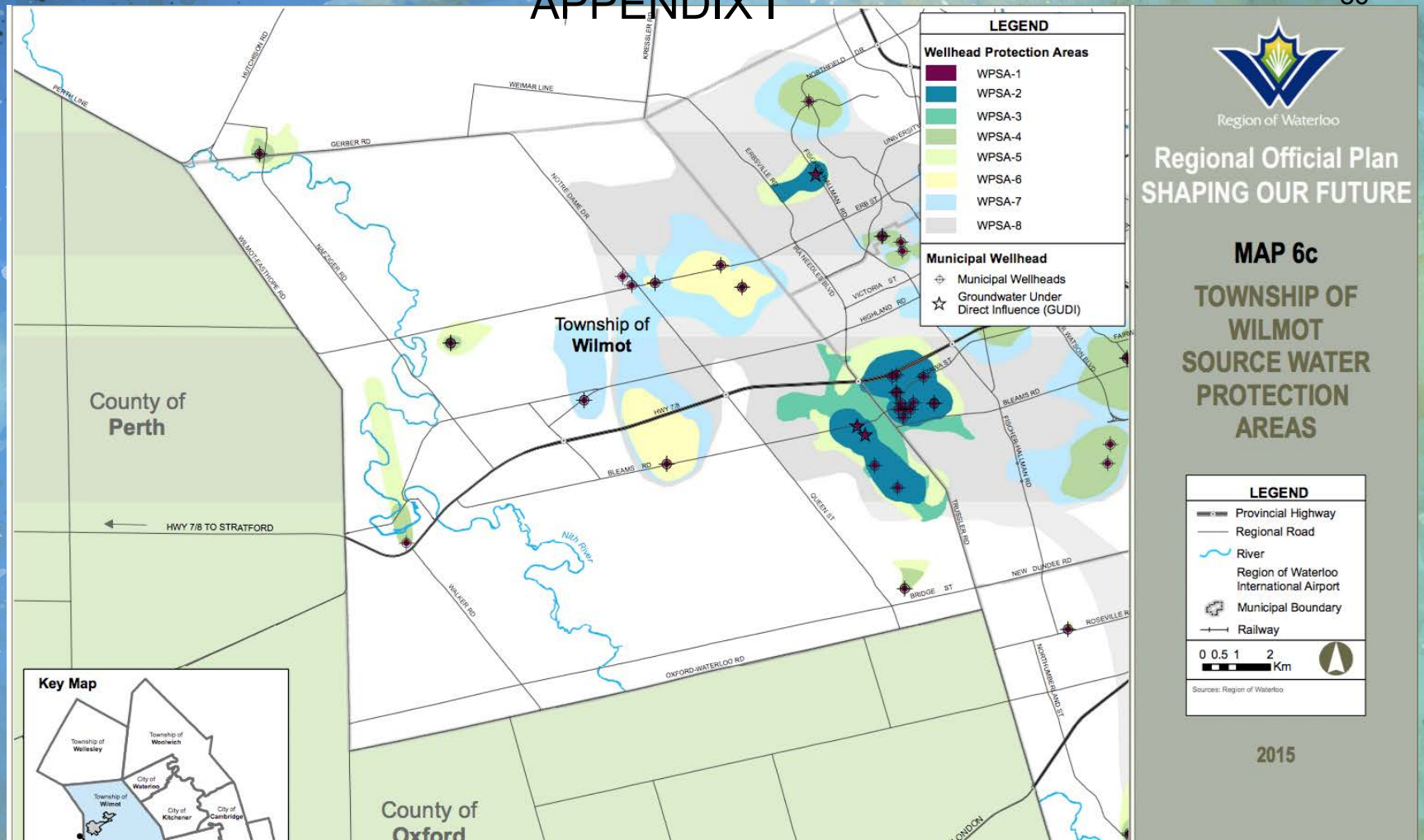
LEGEND
Wellhead Protection Areas
WPSA-1
WPSA-2
WPSA-3
WPSA-4
WPSA-5
WPSA-6
WPSA-7
WPSA-8
Municipal Wellhead
Municipal Wellheads
Groundwater Under Direct Influence (GUDI)
Region of Waterloo
Regional Official Plan
SHAPING OUR FUTURE
MAP 6c
TOWNSHIP OF WILMOT SOURCE WATER PROTECTION AREAS
LEGEND
Provincial Highway
Regional Road
River
Region of Waterloo International Airport
Municipal Boundary
Railway
0 0.5 1 2 Km
Sources: Region of Waterloo
2015
Township of Wilmot
County of Perth
County of Oxford
HWY 7/8 TO STRATFORD
Nith River
Key Map
Township of Wellesley
Township of Woolwich
City of Waterloo
Township of Wilmot
City of Kitchener
City of Cambridge

APPENDIX I

Drinking Water Source Protection Plan

10.10 Schedule E: Regional Municipality of Waterloo: Township of Wilmot Well Fields Maps D1, D2 and D3

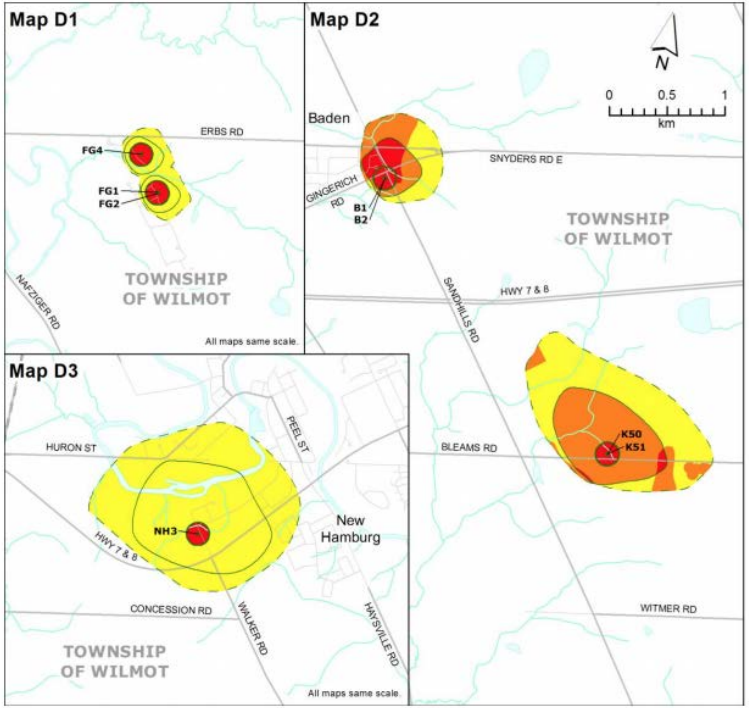

DRINKING WATER SOURCE PROTECTION
ACT FOR CLEAN WATER

Significant Drinking Water Threat Policy Applicability

	Significant Drinking Water Threat Policy Categories	Vulnerability Scores on Map		
		10	8	2,4,6
1.	Waste Disposal			
2.	Sewage Systems			
3, 4.	Agricultural Source Material			
6, 7.	Non-Agricultural Source Material*			
8, 9.	Commercial Fertilizer*			
10, 11.	Pesticide			
12, 13.	Road Salt*			
14.	Storage of Snow			
15.	Fuel			
16.	DNAPLs			
17.	Organic Solvents			
18.	Aircraft De-icing			
21.	Livestock Area			
Local Threat	Oil Pipelines			

Note: This table provides a summary of the activities listed in the Clean Water Act (2006) that apply as Prescribed Drinking Water Threats (PDWT) within the Non-GUDI Wellhead Protection Zones shown on this map. For details refer to the text of the Source Protection Plan and the Ministry of the Environment Drinking Water Threats Tables.
*Application of Commercial Fertilizer, Non-Agricultural Source Material, and Road Salt may not be a significant drinking water threat in some areas due to the % managed land, livestock density, and/or % impervious surface calculations for these areas. See the text of the plan for further details.

- Well
- Main Road
- Minor River
- Lake / Main River
- Lower Tier Boundary

Wellhead Protection Zones:
- WHPA-A
- WHPA-B
- WHPA-C

Ontario

Grand River Conservation Authority

1. Updated November 6, 2014
2. Larger scale mapping of some map layers, including roads and vulnerability scores, is available at www.sourcewater.ca.
3. This map is for illustrative purposes only. Information contained hereon is not a substitute for professional review or a site survey and is subject to change without notice. The Grand River Conservation Authority takes no responsibility for, nor guarantees, the accuracy of the information contained on this map. Any interpretations or conclusions drawn from this map are the sole responsibility of the user.

APPENDIX I

Significant Drinking Water Threat Policy Applicability

10.21 Schedule P: Regional Municipality of Waterloo: Baden and Wilmot Centre Issue Contributing Areas

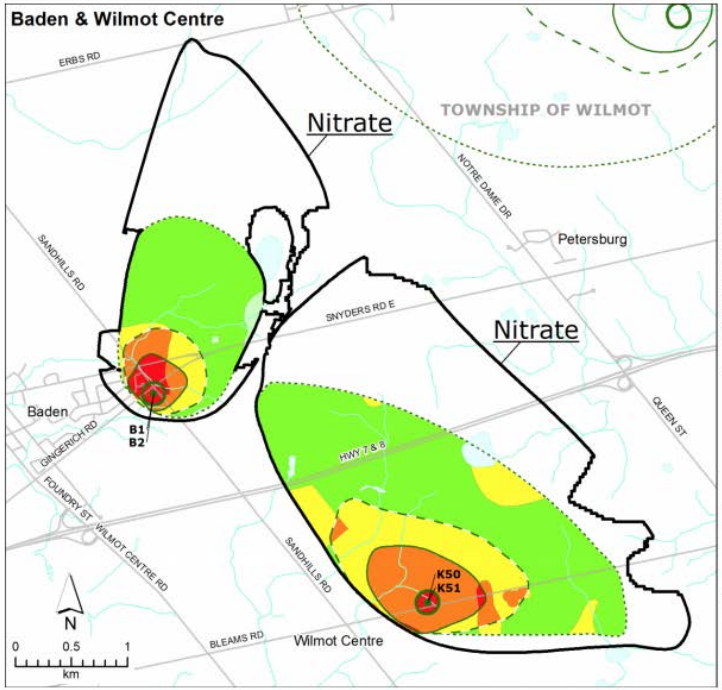

DRINKING WATER SOURCE PROTECTION
ACT FOR CLEAN WATER

Significant Drinking Water Threat Policy Applicability

Significant Drinking Water Threat Policy Categories	Identified Issue			
	Chloride	Nitrate	Sodium	TCE
1. Waste Disposal		✓		✓
2. Sewage Systems	✓	✓	✓	✓
3, 4. Agricultural Source Material		✓		
6, 7. Non-Agricultural Source Material		✓		
8, 9. Commercial Fertilizer		✓		
12, 13. Road Salt	✓		✓	
14. Storage of Snow	✓	✓	✓	
16. DNAPLs				✓
21. Livestock Area		✓		

Note: This table provides a summary of the activities listed in the Clean Water Act (2006) that apply as Prescribed Drinking Water Threats (PDWT) in the Issue Contributing Area(s) shown on this map. For details refer to the text of the Source Protection Plan and the Ministry of the Environment Drinking Water Threats Tables.

Well with Identified Issue(s)
Roads
Minor Rivers
Lakes / Main Rivers
Baden & Wilmot Centre Issue Contributing Areas

Zone Type: A B C D

Vulnerability Score: 2 4 6 8 10

Issue — Associated Issue Parameter

Ontario

Grand River Conservation Authority

1. Updated November 7, 2014
2. Larger scale mapping of some map layers, including roads and vulnerability scores, is available at www.sourcewater.ca.
3. This map is for illustrative purposes only. Information contained hereon is not a substitute for professional review or a site survey and is subject to change without notice. The Grand River Conservation Authority takes no responsibility for, nor guarantees, the accuracy of the information contained on this map. Any interpretations or conclusions drawn from this map are the sole responsibility of the user.

8. Source Water Protection

Waterloo Region is unique in Ontario in that it is the largest urban municipality to rely almost exclusively on groundwater supplies for its drinking-water. Approximately three quarters of all the region's drinking-water comes from the over one hundred municipal wells, many of which tap into rich aquifers sustained by the Waterloo Moraine. The remaining quarter of the region's drinking-water is drawn from the Grand River. Protecting these valuable water resources from contamination and from land uses that could hinder groundwater recharge is essential to maintaining human health, economic prosperity and a high quality of life in the region.

Def. No. 1

The *Province* has recently emphasized the importance of protecting the *municipal drinking-water supply system* by way of land use planning decisions, through changes to the Provincial Policy Statement. The importance of protecting the *municipal drinking-water supply system* is also underscored by the enactment of the Safe Drinking Water Act and the Clean Water Act. The Region's role in implementing Provincial policy, places an obligation on the Region to make land use planning decisions consistent with the Provincial Policy Statement's direction to protect the quality and quantity of drinking-water resources in the region, and to limit *development* and *site alteration* that could adversely affect drinking-water supplies drawn from both the Grand River and groundwater resources. Waterloo Region's continued long-term reliance on groundwater resources necessitates a high priority be placed on protecting this valuable resource through land use management.

Do you live within the 120m Setback area?

How will properties be affected?

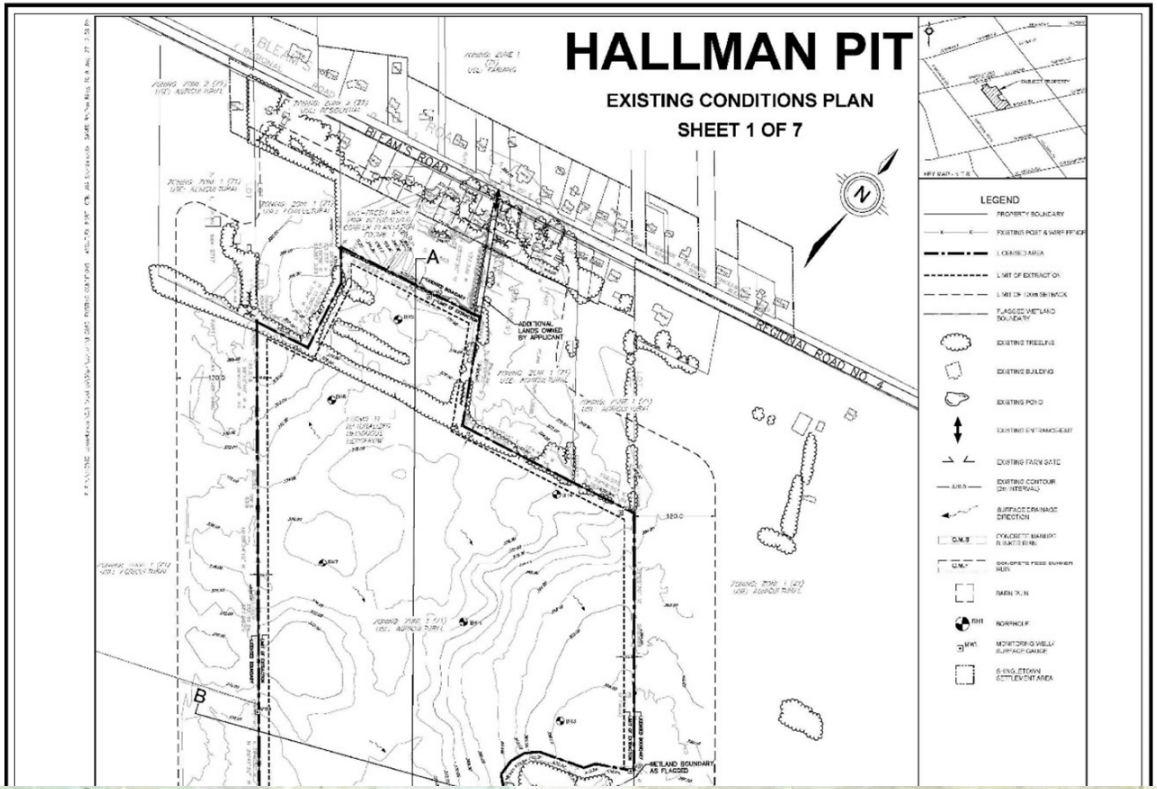

APPENDIX I

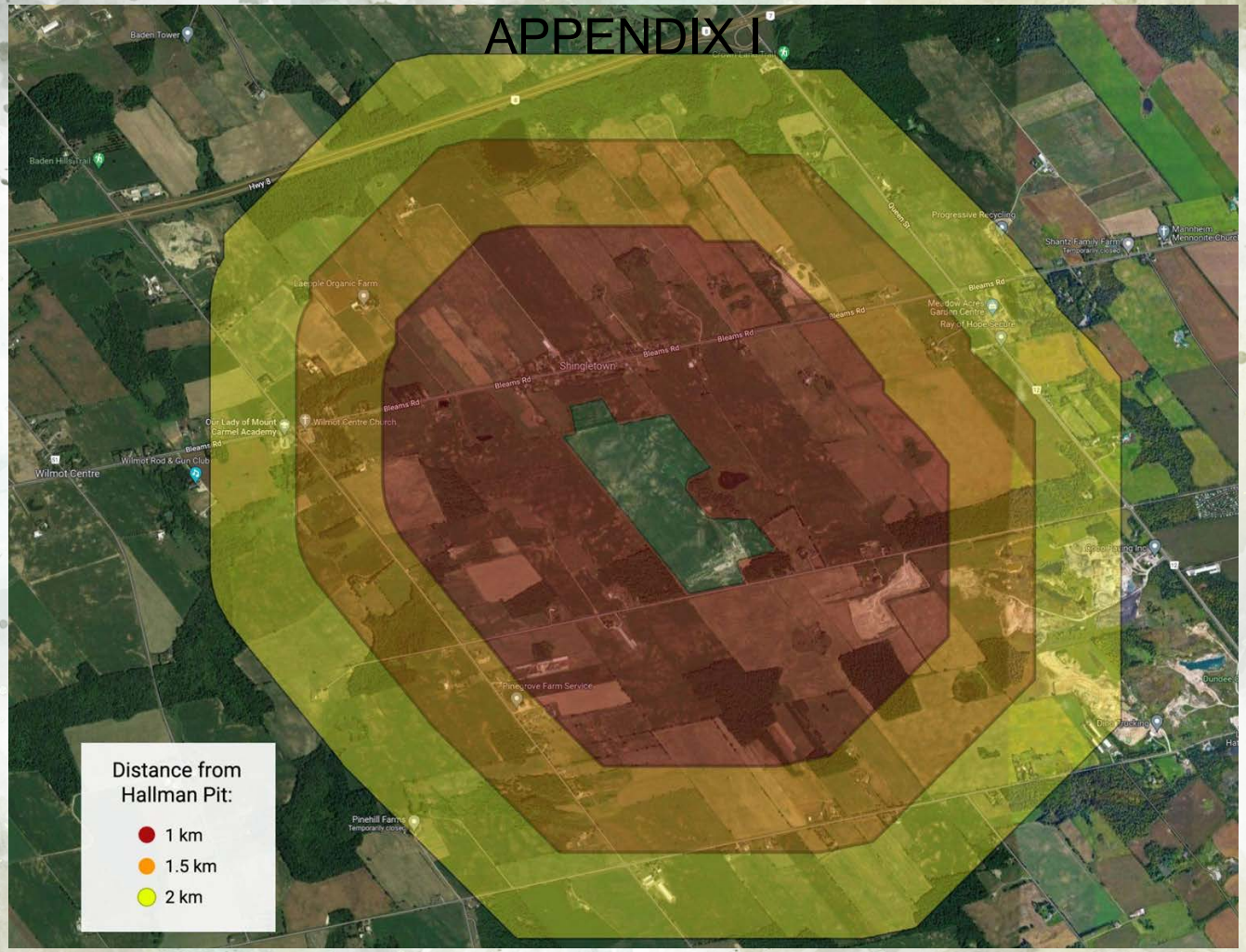
Baden Tower
Baden Hills Trail
Hwy 8
Laesple Organic Farm
Progressive Recycling
Shantz Family Farm
Temporarily closed
Mannheim Mennonite Church
Bleams Rd
Meadow Acres Garden Centre
Ray of Hope Church
Shingletown
Our Lady of Mount Carmel Academy
Wilmot Centre Church
Wilmot Rod & Gun Club
Wilmot Centre
Pinegrove Farm Service
Dundee
Pinehill Farms
Temporarily closed
Distance from Hallman Pit:
1 km
1.5 km
2 km

APPENDIX I

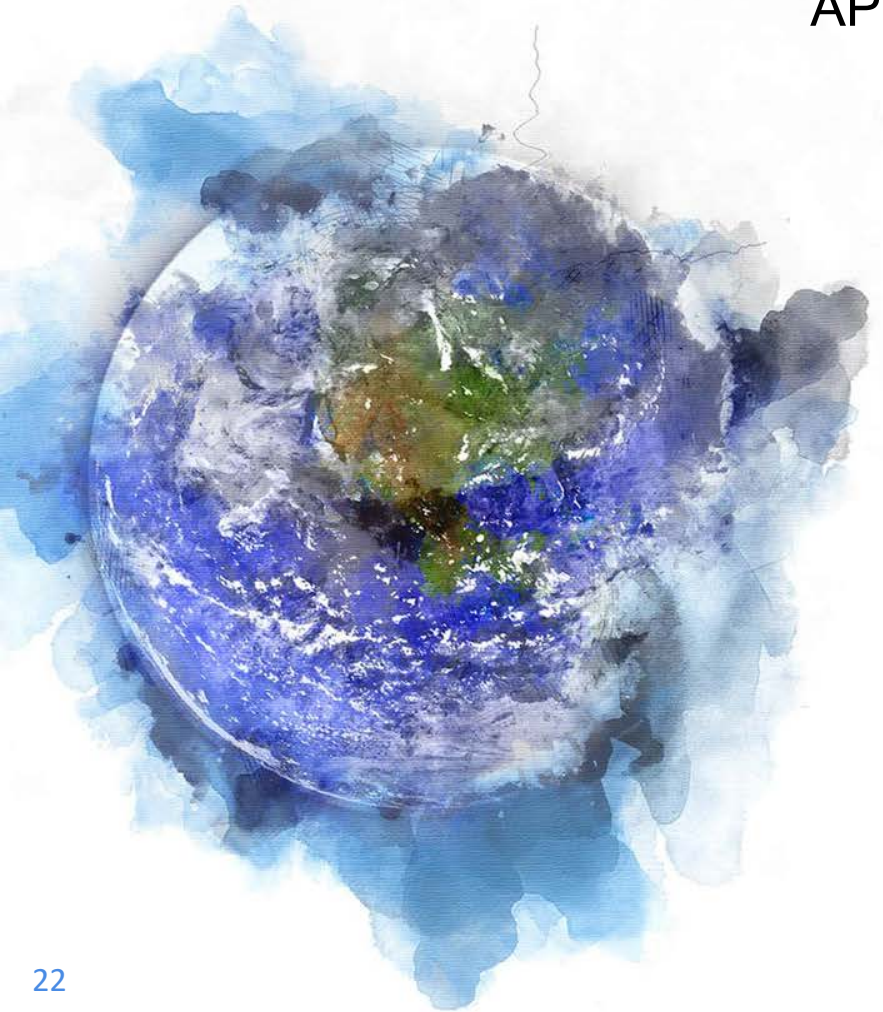

APPENDIX I

Mr. Esbaugh cannot prove beyond a reasonable doubt that he will have no negative impact on our water, environment, roads, mental health, community or on Greenhouse Gas Emissions. The approval of this rezoning has great stakes and is not worth the risks.

APPENDIX I

Please be courageous when you make a decision for this re-zoning proposal.

Please remember the many **people** who have voiced their concerns and please make this decision with the values of our community at heart and not for the goals and projects of an individual developer.

APPENDIX I

March 29, 2022

Dear Neighbours,

I am writing to relay the concerns of both myself and the residents in our community regarding an application submitted for a new aggregate gravel pit in Wilmot Township.

I am expressing my position against the Hallman Pit quarry application. I believe there are potential hazards of this proposed site, which we should not risk exposing. We need to protect the water resources and the people who depend on them.

I understand that decisions on zoning and licensing will be made at local and provincial levels, and I am aware that this is not my jurisdiction as a federal member of parliament. But it is my water.

In Waterloo Region, we are heavily reliant on water from the ground and the Grand River. I am proud of the many citizens taking a strong stance and asking elected representatives to consider the negative consequences of more aggregate sites. Their passion for protecting our land and water is inspiring, as is their diligence and evidence.

I have attended meetings hosted by the company proposing the gravel pit and meetings held by concerned citizens who have reached out and shared their thoughts and views with me, opposing the site.

This proposal's points of contention include groundwater contamination, farmland protection, pollution and community health issues, and road safety issues. There is evidence to support these concerns.

As for the demand for more aggregate in infrastructure, the industry has permission to dig thirteen times more aggregate than we need. There are already multiple active licenses near the proposed site, and throughout our region, many sites sit dormant.

Waterloo Region has high-quality soil and aquifers; giving unhindered and self-regulated access to mining would be unsound. Our region has some of the best soil in Canada. Farmland is not a renewable resource; we should be preserved. We must protect our water and environment for ourselves, our children, and our grandchildren.

Canadians deserve a healthy environment and a safe community. All levels of government must work together to ensure we protect and preserve the safety, quality, and supply of our water.

I am asking that our citizens' health and the protection of our environment be considered up-front and consistently in all reviews. This decision should be about the needs of the residents, not the applicant's wants.

.

APPENDIX J

Helen Schroeder's Delegation

Good evening, my name is Helen Schroeder and my husband's name is Ralph Schroeder. We have lived at 2106 Bleams Rd. in Shingletown for 27 years now and have felt truly blessed to live in this community. I'd like to give you some background as to how we came to live here, and would like to express my concern surrounding the Hallman gravel pit proposal. As local residents in Shingletown we are concerned about the effect putting in a pit so close to our homes will ultimately have, if this is approved. I cannot believe that we are here today to discuss this issue and that it has come as far as it has, given the protest of the community thus far. We don't need nor want a gravel pit beside our homes.

I have been a citizen of Wilmot Township since 1975. Growing up, I lived with my family in New Hamburg for 15 years, and my mother, brother and daughter still live there. I attended schools in New Hamburg and Waterloo Oxford in Baden for high school. We moved away for a few years to Kitchener, but we were both so happy when the opportunity to buy the family property from Ralph's grandparents in 1995 became possible. We were so excited to be raising our own three children in Wilmot Township and having them be part of the thriving and loving community for their childhood. We believed it would be the perfect place for them to grow up. It felt like coming home for me, since it was a vision that I had always had for my family.

We have a 20 acre property located directly North of the proposed Hallman gravel pit owned by Rick Esbaugh. We would have a direct line of sight to the land that will be mined for the next 30 plus years. Right now, it's a quiet, beautiful farmland, which can be seen for kilometres. We rent 15 acres of our own land to a neighboring farmer. We are concerned about losing the enjoyment of this idyllic and agricultural environment. Instead we would be staring at a huge berm, listen to loud machinery, feel vibrations, see extra traffic coming through, and try to deal with dust and potentially contaminated water.

Another problem that we have with the proposed pit are the health concerns; I suffer from asthma, and I also know some of my neighbours struggle with breathing issues. I worry that the fine particulates from the excavations and extra diesel from the trucks and excavators in the air may trigger and exacerbate an already sensitive condition that I have. I am also annoyed about the extra noise (and there will be extra noise), such as the constant beeping of heavy machinery, dump trucks and vibrations that would carry into our community. There would be no reprieve, given the hours the pit will be running. I know the noise will happen, since a neighbour closer to us has had clean fill being delivered for the last few years, and we would hear the trucks as clear as day in our backyard. Environmental concerns are at an alltime high. Why are we still talking about this pit being placed right next to a residential area affecting land, air and water quality as well as quality of life for Shingletown? Not only that, it poses a safety threat for our children, who may think it would be a good idea to explore a gravel pit. A simple berm would not be sufficient protection. Access to it wouldn't be that difficult for them.

The threat of this pit has caused undue and unnecessary stress during COVID, when we have been concerned about our personal health. In order to survive the pandemic, many of us saw our homes as a place of refuge, a place to replenish and a place to keep up safe and healthy. The threat of this pit has already caused distress to the long-term residents. The number of home sales since this pit proposal has been in play in Shingletown has been noticeable and

alarming, since some are seeing that there is no choice and it's better to get out while it's still good. This is a community of people who have been here for 30 or more years. It is such a shame that your taxpayers feel so shaken to remain in what has been their lifelong home. Through conversations with my neighbours, people are clearly unsettled and worried that the township will let us down and approve the pit. It is way too close to us.
In your procedural bylaw for council protocols, the following points are listed as the duties of the council:
a) to represent the public and to consider the well being and interests of the Township;
b) to develop and evaluate policies and programs of the Township;
Through media coverage, some members of the township council have implied that you don't have a choice, which I feel is very short-sighted. I challenge that notion of choice, since the citizens and neighbours of your community chose and elected you to represent the citizens and do what's best for Wilmot Township. More importantly, we are a vast, rich resource of groundwater, which is a supply for the larger community of Waterloo Region. The term "council" comes from the Latin meaning *a meeting, a gathering of people.* It is the notion of a calling together. If this gravel pit goes in, we will know that the township is not working together with the citizens of this community. We have been long-time taxpayers for this community. If this is approved, the council is breaking our trust for the future. Our words should matter to you. Time and time again, Citizens for Safe Groundwater have done their research to clearly show you the overwhelmingly negative consequences of placing a gravel pit, where natural resources such as good farmland, natural habitats and safe groundwater need to be preserved and taken care of. We already have enough gravel pits. We do not need anymore gravel pits. Additionally Mr. Esbaugh continues to push the envelope with asphalt and concrete recycling, which were not in the initial proposal. How can you rehabilitate land from those types of activities?It seems unlikely it would be successfully done, and the land pays for it, along with the residents. It also means more trucks, noise and potential water and air contamination. Please try on the shoes of the people of Wilmot and walk for a while, and see how you might feel having a gravel pit in your back or front yard. We implore you to please maintain our beautiful community and consider the long term and irreversible damage that allowing this pit would cause. Any future pits should be located away from already established residences, so that our community remains beautiful and safe to live, and continues to be a place where families would want to raise future generations. It is unfair and unjust to place the wants of one corporate individual over the needs of an entire residential community. I hope that you will consider our health and well-being carefully. You are our last hope to stop this. Thank you for your time and willingness to listen.

Ralph Schroeder's Delegation

My name is Ralph Schroeder and I live at 2106 Bleams Rd. in Shingletown with my wife Helen, whom you have heard speak earlier. As my wife said, I am also opposed to the Hallman Gravel Pit proposal. Thank you.

APPENDIX K

DELEGATION TO WILMOT TOWNSHIP COUNCIL ON THE SUBJECT OF THE PROPOSED HALMAN PIT GRAVEL MINE
BY MARILYN HAY, COUNCIL OF CANADIANS
4 APRIL 2022

Good evening. I am here this evening as the Chair of the Kitchener-Waterloo Chapter of Council of Canadians, as well as the national Board member representing the interests of Chapters in Ontario and Quebec and, finally, as the Co-chair of the National Board. The Council of Canadians stands for the interests of People, Planet and Democracy, all of which are of concern this evening. Let's be clear: there is absolutely no need for yet another gravel pit in Waterloo Region, particularly given that none of the half dozen others in the area are being mined anywhere near capacity; this is a private sector profit grab, pure and simple, but at what cost?

For the People, the children and adults of Shingletown, the fine aggregate in the air would put their health at considerable risk from inhaling particulates so microscopic that they will invade lungs and blood vessels of everyone who lives there; this can have dire impacts on cognitive capacity over time. For the people of Waterloo Region, the mining in this area would compromise the natural filtration of our groundwater, upon which we rely totally for our current and future water supplies. For the taxpayers of the Township and Region, the massive wear and tear of enormously heavy vehicles for six to twelve hours a day, six days a week, will damage roads that were never built for such use.

From the perspective of the environmental wellbeing of our Planet here in Ontario, it's no secret that Ontario already mines 13 times the gravel ever needed or utilized in the province. Where these mines have been opened, even when only mined to limited capacity, they play havoc with groundwater supplies in 'washing' the aggregate (and producing those fine particulates that are so dangerous) and compromise the watersheds, waterways, rivers, creeks and groundwater filtration that both urban and rural users depend upon. This is an enormously high environmental cost to pay to support the speculative profit of a few developers.

Finally, from a Democracy perspective, surely the rights and health of urban and rural taxpayers and residents for clean air and water now and into the future – especially given the risks and unknowns presented by ever-escalating climate change – outweigh the interests of private sector speculators hoping for profit from totally unnecessary gravel mines.

I hope the Council will refuse to amend the bylaws, thereby blocking this superfluous and dangerous mine. I would submit that no future permits be approved, and that a full moratorium on all new excavations be implemented, until there is a comprehensive provincial study to examine the actual future needs for gravel mining in the Province of Ontario. Such a study would, of necessity, consider the full environmental impacts of any future gravel pit approvals.

Thank you for your time this evening.

APPENDIX L

Good evening, Mayor Armstrong, and counsel members. I want to start by thanking you for your time this evening. I understand what a huge decision you must make tonight. While I read through my letter, I urge you to put yourself in our shoes. Please hear our concerns and take into consideration the enormous negative impact this operation would have on our community.

My name is Rachel Rennie, I live at 2094 Bleams and I object to the Hallman gravel pit. This is a picture of my family – we are only some of the smiling faces that will be affected by this decision. May I remind you that this will negatively impact hundreds of people. Please help me to protect my family, my neighbours and this lovely community.

A quick recap from my previous presentation I spoke about the numerous health impacts a gravel pit brings forth. One main concern is Silica - a mineral that that becomes harmful and life threatening when it is disrupted by gravel extraction as it becomes airborne. This airborne particle is classified as a chemical agent and is a regulated substance. Over time, exposure has been proven to cause forms of cancers, COPD, autoimmune diseases and increasing susceptibility to infections. This is a major health concern and consideration MUST be given to citizens living around gravel pit operations who will be exposed to elevated levels.

Another concern is the use of diesel fuel. Use of this fuel creates diesel emissions which consist of many volatile compounds. As such these emissions have been classified as carcinogenic. Health studies by the Canadian Government provides sufficient evidence to prove that diesel

emissions are associated with increased risk to lung and bladder cancer. There is also ample evidence to show that sensitive subpopulations, such as the elderly and children are at a greater risk of adverse respiratory issues due to the exposure of diesel emissions. So, I am asking you - how will you reduce and mitigate these health effects to the roughly 200 residents living within the area of the prosed gravel pit? The real answer here is that you can't. The only way is to say no to this pit.

I want to emphasize that the proposed Pit sits on top of a protected drinking zone. There is no way to accurately know the effects of 30 years of mining until after the damage has already been done. It just does not make sense to allow a pit to dig 1.5 metres above a water. Let's also keep in mind that these water tables are not even. In a study done by Finland it was reported that heavy metals and degrading organic substances as well as viruses and bacteria are retained relatively well in natural areas of the ground. This natural retention is weakened where gravel had been exposed. Making the risk of ground water contamination higher on extraction sites. Faecal coliform bacteria were also observed more in gravel extraction areas with increased nitrates. This is not something to take lightly – The Walkerton e-coli outbreak that infected 2300 people and killed 7 was a result of faecal contamination. In this case well 5's aquifer was prone to absorbing surface run off from gravel soiled zones – testing showed the ongoing deterioration in the quality of water from the well. The ministry failed to apply a provision to reclassify re-existing wells – there were no contamination alarms or emergency shut offs. Due to the shallowness of well 5 and being surrounded by fractured bedrock it was unusually susceptible to contamination. After heavy rainfall manure was subsequently incorporated

into the soil contaminating well 5 with e-coli. We need to ensure municipal water safety. We are asking for irreversible damage by allowing a gravel pit to operate on top of aquifers in a drinking water protection zone.

Operating heavy equipment on top of a protected groundwater comes with great risk and enormous complications. One drop of oil containments up to one hundred litres of water. One blown hydraulic line on any piece of machinery has the possibility to contaminate millions of liters of water. An article from the international journal of engineering research and technology noted that Diesel fuel mixtures of toxic chemicals pose enormous health risk if mixed with ground water – this mixture can percolate through ground water. The permeability of soil is reduced with increasing diesel content, decreased liquid limit and a decrease of internal friction – in other words even the smallest spill alters the physical properties of the soil inhibiting the natural filtration system. Even with a spill response team you can only mitigate the impact on the environment you cannot reverse the implications from a spill. Oil carried by rainfall may persist in the subsurface environment for decades. 20 years in the automotive industry my husband has yet to see a piece of heavy equipment that does not leak some form of fluid.

After further research and attending a very informative call I have learned that the Ontario Government authorized the gravel mining industry to extract thirteen times the amount of gravel each year than needed. It is no surprise that we are unable to fully recover the full functions of the land once it has been mined. In Wilmot township to the south of Witmer road we already have seven existing pits. Of the 200,000 tonnes per year extracted from these pits only 10% of the licensed capacity is used. Why would we

approve the Hallman pit when we already have functioning pits that could be used a full capacity? I struggle to understand how the benefit of one businessman outweighs the benefits of an entire community. Tri City Materials currently owns and operates 5 pits within the region and surrounding areas. The financial gain of this operation is not more important then the wellbeing of hundreds of citizens.

In conclusion I am asking that as our counsel you uphold the six core values of Wilmot. Please put our **health and wellbeing** first. Please support us a **community** by not allowing this pit. Allow our children and **legacy** to live healthy happy lives. Think **forward** on how this will impact climate change and pave the road for future pits. Allow Wilmot residents **accessibility** into making decisions that concern their well being. Last, please **balance** economic development with community liveability.

Thank you for your time.

APPENDIX M

Re: Zone Change Application 11/19
Jackson Harvest Farms Ltd./IBI Group
1894-1922 Witmer Road

Good evening Mayor Armstrong and Councillors, especially my Ward 3 councillor, Barry Fisher,

I've lived in Baden with my husband for 31 years. We moved from Kitchener in 1991 with our two young sons and have never wanted to live anywhere else. We love the quiet countryside setting, the clean air and the wide open spaces.

Because of our positive experience in Wilmot, I want our township neighbours in Shingletown to continue to enjoy the quiet rural community that they have grown up in and thrived in, some for several generations. I do not believe that one wealthy businessman should have the privilege of coming along and buying a piece of prime farmland behind and beside their homes and turning their happy and peaceful lives into a living hell.

After over a two year licensing process, there are still many outstanding issues. I have chosen just three to comment on:

1) VIBRATIONS

The Cambridge Today newspaper reported on February 28th, 2022 that a Delovan Drive resident told Cambridge councillors that noise from a gravel crusher beside her house "regularly wakes her neighbourhood with vibrations… that night shift workers can't sleep during the day…and that dust from the Dance gravel pit is so bad they can't open their windows to let the fresh air in."

I can't find any mention of this problem of vibrations caused by gravel pits in either the Region's Final Comments report or the Wilmot Development Services Staff report. Why have vibrations, which not only cause cracks and damage homes but also have a negative effect on one's sleep and mental health, been totally ignored?

2) PROPERTY VALUES

The Wilmot Staff Report does not address the issue of decreased property values. Obviously, the market value of their farm and residential properties will decrease if there is a zone change from Agricultural to Extractive Industrial. It would be difficult to quantify the extent of the drop in market value but I don't think that anyone would suggest that the impact would be negligible.

3) REHABILITATION

Concerning land rehabilitation, the sad truth is that almost all the experts know that this gravel pit can never be returned back to prime agricultural condition. The Regional Staff report admits that:

"no scientific evidence is available to show that a "state of the art" soil rehabilitation process will result in meeting the test for soil rehabilitation to an "agricultural condition".

But the proponent's experts and peer reviewer state that the site WILL BE rehabilitated back to agricultural condition.

The Provincial Policy Statement (PPS) permits aggregate extraction in prime agricultural areas provided the site is rehabilitated back to an agricultural condition, meaning the same areas and average soil capability are restored.

So, how can the Wilmot Staff Report state, on page 3, that the applicant has demonstrated compliance with the PPS, when both the Regional and Wilmot staff acknowledge that the Hallman pit will likely never be compliant?

PROVINCIAL POLITICAL CONSIDERATIONS

The Wilmot Staff Report implies that Council's hands are tied by the province and that you are powerless to vote your conscience against this application.

There will be a provincial election on June 2nd and Premier Doug Ford, who would like to be re-elected, was quoted as saying this, about the proposed gravel pit in Campbellville:

"I'm not in favour of the Campbellville quarry. I believe in governing for the people. And when the people don't want something you don't do it. It's very simple. I know the Mayor doesn't want it, no one wants it. I don't want it. We are going to make sure it doesn't happen one way or another."

MZOs

Also, in this current election cycle, I suspect that it is increasingly less likely that Steve Clark, the Minister of Municipal Affairs and Housing in Ontario, would consider issuing a Minister's Zoning Order (MZO) to the applicant, if our community is against it. Witness the turnaround in Cambridge when the Blair Village community fought against the Warehouse MZO and were successful. Steve Clark also rescinded MZOs in Stratford and in Pickering, as a result of community uproar and Council's backtracking.

ZONING BY-LAWS

I think that there should be a law to protect people from having their lives ruined by a gravel pit. Well, in fact, there is a law. It's called a zoning bylaw. That is one reason why we have zoning bylaws: to protect residential and farm communities from being destroyed by industrial noise, dust, vibrations and heavy traffic. Shingletown residents have done nothing to deserve such a dramatic downgrade in their quality of life. If you vote against rezoning the property, the law will continue to protect them, as it was designed to do.

NEED TO SHOW NEED

Finally, in response to the question: Why would we need an eighth pit, given that there are already seven existing gravel pits that are only operating at 10% capacity on Witmer Road? The Staff Report answers:

“the PPS (Provincial Policy Statement) specifically prohibits municipalities from requiring a demonstration of need or making a decision on the basis of availability, designation or licensing locally or elsewhere.”

As outdated as this policy is, I would like to suggest that the Province can NOT prohibit you from representing your constituents, who are depending on you to protect their quality of life, their mental and physical health, their farmland, their well water, and their property values.

Please, just listen to what this community, YOUR community, wants and vote accordingly. Thank you.

Wilmot Township Zone Change Application ZCA-11-19

Wilmot Public Meeting January 13th, 2020 - Photo Courtesy: Catherine Fife, MPP

Application Not Aligned With Wilmot Core Values

- **Health & Wellbeing** – Expert identified **risk** to Citizens health, wellbeing.
- **Community** – **Widespread opposition** from Shingletown, and across Wilmot.
- **Legacy** – Prime Farmland **Destruction**, Countryside Community fabric at risk.
- **Accessibility & Inclusivity** – **'Uphill battle'** for community, process favours applicant, *'pitting' our community against its elected body*.
- **Forward Thinking** – Zone Change unnecessary, and ***only*** *benefits* **one** person.
- **Balance** – **Imbalance** between Applicant reports, Planning reports, Community Expert reports.

Conformance to Provincial Policy Statement using 'Science'

Provincial Policy Statement (PPS) sets rules for land use

Recently updated by the current Ford Government in 2020

3rd Party Peer Review indicates not in compliance with PPS 2020

"*No scientific evidence* has been presented" (by the applicant)

Zone Change Application **Contradicts PPS, Council Must Vote No** to Zone Change

Recognized Experts in their Field

- Acoustic - John Coulter - 30 Years
- Air Quality - Ortech Consulting - 25 Years
- Water - Wilf Ruland, UW Professor Emeritus Emil Frind, Michael Frind - 110 Years
- Road Safety - Russell Brownlee - 25 Years
- Planner - Stefan Szczerbak - 22 Years

- Expert Reports **Unaddressed**
- **Unnecessary** Risk to Water Supply
- Noise & Air Quality **Inconsistencies**
- Health & Wellness to Village of **Shingletown**
- **Unacceptable** Hours of Operation
- Auxiliary Use in **Sensitive** Area
- **No** Evidence of Acceptable Rehabilitation
- **Risk** to Neighbouring Agricultural
- Natural Environment, Wetland **Concerns**
- **Inadequate** Buffer (Pit Floor vs. Water Table)
- Haul-Route **Safety**/Cattlelands Agreement

Air Quality Concern - "Zone of Influence"

THE EXPOSITOR

Local News

Dust-up over gravel operation

Vincent Ball

Sep 29, 2020 • September 29, 2020 • 2 minute read • Join the conversation

Stephanie and Robert Slack and their son, Oliver, stand near a sign they put up on their Oakhill Drive home. The family says dust from an aggregate pit on Colborne Street West across from their home is causing problems. PHOTO BY VINCENT BALL /The Expositor

ORTECH
a Kontrol Technologies Company

DATE: March 30, 2022

TO: President, Citizens for Safe Ground Water Inc.

FROM: Scott Manser
E-mail: smanser@ortech.ca

Re: Initial Peer Review Comments and Results – Hallman Pit
ORTECH Reference #92514

"Upper End" (favorable) modelling vs.
"More Realistic" modelling

Conclusion: Shingletown area at risk!

Restrict Auxiliary Uses based on Wilmot Official Plan

ACCESSORY PROPERTY USE

Do auxiliary aggregate activities pose an unnecessary risk to sensitive recharge areas?

The Township will regulate uses associated with aggregate extraction through the Zoning By-law as follows:

a) permit *accessory uses* associated with aggregate extraction operations and processing activities such as crushing, screening, washing, stockpiling, blending with recycled asphalt or concrete materials, storage, weigh scales, parking and office facilities;

Source: Township of Wilmot Official Plan – April 2019 Consolidation - 7.1.1.7

Wilmot Council can restrict auxiliary use:

- ✗ **No** 'wash ponds', crushing on-site
- ✗ **No** used asphalt/concrete stockpiling, reprocessing.
- ✗ **No** fuel storage on-site

Note: *Proposed activities take place in a* ***"Sensitive Water Recharge Area"***

Council Rejects Controversial Blair Warehouse Proposal

April 6, 2021 – Council endorses 'MZO' for 'mega-warehouse', property ***already zoned industrial*** (rumored to be Amazon)

March 21, 2022 - Council turns down Municipal 'Heritage Impact' Study, and Expert Traffic Study **(Traffic Peer Reviewed by Cambridge/RoW)**

Outcome: Developer Cannot Build Its Warehouse

"We do really need to listen to what the community wants, so I can't support this motion" - Cambridge Cllr. Shannon Adshade

NIMBY Next It Might Be You!

Next We Might Need Each Other!

Lisbon New Prussia Berlett's Corners Josephsburg St. Agatha Sunfish Lake Philipsburg Foxboro Green Waldau Petersburg Baden Mannheim Shingletown Victoriaburg Wilmot Centre Holland Mills New Hamburg Luxemburg Punkeydoodles Corner Haysville Pinehill New Dundee Rosebank

APPENDIX O

Thank you for the opportunity to speak on behalf of 50by30WR.

We applaud Council's decision on March 28th to support the call to the Province for a moratorium on gravel mining until an independent panel of experts can conduct a review and make recommendations that guarantee gravel mining does not compromise groundwater for future generations and does preserve gravel which is a finite resource.

Climate justice highlights other priorities including: prevention of destruction of natural habitat and preservation of fertile soils, reconciliation with indigenous people regarding treaty promises and stewardship of the land. We are asking Wilmot Council to refuse the zoning change now, wait for the expert evaluation and recommendations proposed by the moratorium on gravel mining and then reassess the township needs with the best interests of a safe, just climate future and the health and safety of current residents protected.

In it's 2008 report *A Greener City for All: Dig Conservation, Not Holes,* the Toronto Environmental Alliance writes:
"If we don't change our current aggregate usage, renewing and building the GTA's infrastructure will destroy precious agricultural land and world-renowned natural spaces in the Greenbelt. The key recommendations of this report call for GTA municipalities to ... adopt a 3Rs approach -- reduce, reuse and recycle -- to aggregate consumption in order to ensure GTA infrastructure does not destroy the ecological integrity and agricultural livelihood of the Greenbelt. It also recommends that municipalities urge the Province of Ontario to develop new aggregate policies that mandate the 3Rs and promote the production of "sustainable" aggregate."

Further writing about the environmental impacts of aggregate extraction "less than half of the land disturbed for aggregate production between 1992 and 2001 has actually been rehabilitated."[2] The province classifies pits and quarries as "interim uses of the land" and requires 100% rehabilitation of pits and quarries. Clearly this requirement is not being met. Destroyed ecosystems and source water aquifers are irreplaceable. This is not an interim land use. The landscape is blotted with

APPENDIX O

destructive pits and quarries, and species of all kinds endure permanent negative impacts."

What transformations in the construction industry, and in the types of materials used, will be necessary for a
sustainable future? How will these changes determine land use decisions regarding aggregate extraction?

In a Science Direct series on Civil and Structural Engineering published in 2018, the author writes:
"The responsibility of achieving an eco-efficient concrete structure lies on the industry stakeholders, including the material producers... Of importance ...is the potential of structural engineers in reducing the environmental impacts of concrete structures through selecting eco-efficient repair and rehabilitation systems which consume less natural raw materials and induce less CO_2 emissions, while providing the same reliability, with a much longer durability."

In another Science Direct series published in 2021 the author writes:"The recent and growing trend to manufacture concrete with aggregate recycled from construction and demolition waste has contributed to the implementation of circular economy principles in the construction industry."

The Association of Municipalities of Ontario writes "Municipal governments have significant responsibilities for the siting of all land uses, including aggregate extraction. …Municipal governments must then deal with the impacts of the site on water resources, neighbours, haul routes, road damage from heavy hauling, pit rehabilitation, and safety for traffic and pedestrians."

Wilmot Council will be considering all of these impacts tonight while making the decision regarding the zoning change requested for the Hallman Pit. Is there urgency to make a zoning change now? No, apparently not, given that there are already seven pits which extract only 10% of the licensed capacity.

APPENDIX O

Does the climate emergency demand that we re-evaluate the construction industry's future need for aggregate? Yes, most certainly. A new UN report on climate change was released today. Scientists report harmful carbon emissions from 2010-2019 have never been higher in human history, and is proof that the world is on a "fast track" to disaster. António Guterres has warned, that it's 'now or never' to limit global warming to 1.5 degrees. We know this moment in history calls for courage and openness to new ways of thinking and doing. Business as usual is not good enough, in fact it is irresponsible. The least we can do is to demand our province act on the Demand for a Moratorium Now (DAMN). The best we can do is to wait for climate informed expert evidence to guide decision making about sustainable aggregate.

I am asking Wilmot Council to take the wise path forward. Please refuse this zoning change.

Thank you,
Barbara Schumacher,
Research Team Lead, 50by30WR

Presentation to the Township of Wilmot
April 4, 2022
Zone Change Application, Jackson Harvest Farms
Hallman Pit 1922 Witmer Road
Special Council Meeting

Honourable Mayor, Councillors, and Guests,

My name is Kevin Thomason. I am a long-time Wilmot resident and community advocate from Cedar Grove Road.

After three years of meetings, delegations, and presentations, along with countless letters, e-mails, and phone calls what is there left to say that you haven't already heard?

Yet, you see people lined up here by the dozens to speak tonight. This is new. In past decades, so many aggregate operations were approved in our township and region with far less citizen input or objection.

But as this Council demonstrated firsthand just the other day, with the unanimous approval of a motion calling on a moratorium on gravel pits, we are in a new era.

People are worried and increasingly speaking up for the future that they want to see. Climate experts are increasingly panicked, and an entire generation of young people are already suffering from climate despair.

The people are protesting this pit and every pit. Your decision here tonight while it carries the guise of a simple Zone Change, we all know, will change these lands forever - from agricultural and natural heritage lands to an extractive industrial designation.

As much as there is the false hope and pipe dream of rehabilitation, there has never been an acre of gravel pit returned to productive prime farmland in Wilmot Township. Almost every aggregate pit ever approved in Ontario, languishes in some forlorn, depleted state with at best, tufts of grass here and there, scattered, abandoned piles of dirt with puddles, ponds and water bodies in various states of disarray.

We all know that pit rehabilitation is a joke in Ontario. Even Wilmot Township's own pit is more of an embarrassment and liability than something to brag about.

We all know that despite all the conditions listed for this pit, there will be few inspections, if ever, and no enforcement or follow-up as pit after pit across our province has proven repeatedly.

We know that not nearly enough aggregates are recycled, and that there is little effort to improve practices because of the way that aggregates

trump everything in Ontario, and there are such tremendous profits to be made.

This is not sustainable in any way. There is no correlation between the destruction and actual need. Aggregate mining is out of control and is irreparably destroying much of the best farmland that we have while also threatening and destroying our precious groundwater.

Our community has no pipelines to Great Lakes. We are solely dependent on our local watershed for all our water needs and we must live carefully within the carrying capacity of our lands.

Some of our watersheds in Wilmot Township are already severely stressed and compromised. With huge growth forecast and thousands of more township residents to feed and sustain in the years ahead, we can't be destroying our farms, aquifers, groundwater recharger areas, and losing millions of litres of water like this.

Our planet is at the breaking point.

It is time to say No, and ensure that our grandchildren are proud of our legacy.

Our region is renown for being pioneers - be it the blue box that is now a global standard, ESPA areas, our Countryside Line, rapid transit, no smoking bylaws, and so many other things that are now taken for

granted. Yet at the time, each one of these things took bold politicians going out on a limb and taking big risks. Opposition to every single one of these incredible initiatives was daunting and there were tremendous battles at the time.

Across Ontario municipality after municipality has been unanimously approving declarations for aggregate reform and moratoriums on seeing any more farmland destroyed for yet more gravel pits. We are already losing 175 acres of rural and farmland each and every day in Ontario.

Canadians are demanding better. But we need more than words and rhetoric. I don't think that any elected official who has called on Doug Ford to act with this recent moratorium actually believes the Premier is really going to do anything - anything but ignore them completely.

We know the provincial aggregate standards are too lax, outdated, and have been skewed dramatically to be in the interests of the operators - not the greater public good.

However, things are changing rapidly. There is a provincial election in just a few weeks, a municipal election in just a few months. We only have 91 months remaining to half our greenhouse gas emissions by an astounding 50% just to meet our Paris Accord Commitments by 2030.

So many concerning aggregate pits, urban sprawl subdivisions, industrial developments, and attacks on our natural ecosystems are being appealed by increasingly concerned citizens that even with last week's OMB funding increase announced by Doug Ford, it will still be years before all these cases are heard. By then our world will have changed even more dramatically.

Wilmot citizens are not going to be upset to see our tax dollars spent at the Ontario Land Tribunal and in court protecting our local farmland, water, and communities. We are all here tonight because we are upset that our government isn't meeting our expectations, matching our values, and doing enough towards the future that we are increasingly so concerned about.

We all want to be on the right side of history. We all need to draw a line in the sand (or gravel), and we want you to stand up tonight and say No.

Please be the leaders that we hoped that we had elected. Be brave, for citizens remember positively the people who stood strong by their values and took bold actions, while also being extremely cynical at those who call for a gravel pit moratorium one week, and then astoundingly approve a new gravel pit the following week.

In Conclusion,

We have no gravel shortage in Wilmot. This sand and gravel has laid here for millions of years and there will be lots of time to figure things out in future years if there ever is a need.

We must do better. Please reject this zone change application tonight. It is not in the best public interest, nor the Township's best interest.

Please ensure that Jackson Harvest Farms doesn't become Final Harvest Farms.

Thank you,
Kevin Thomason

1115 Cedar Grove Road
Waterloo, Ontario N2J 3Z4
Phone: (519) 888-0519
E-mail: kevinthomason@mac.com

APPENDIX Q

Mike Balkwill
Delegation to Wilmot Council.
April 4, 2022.

I am Mike Balkwill and I work for the water watchers a non-profit environmental advocacy group. We support community groups to protect water in their community. I also work on the Reform Gravel Mining Coalition.

Last week Wilmot Council passed a motion supporting a moratorium on new gravel mining approvals in Ontario.

Thank you. Your Council's support is part of a growing movement by municipalities across Ontario who want to see limits on gravel mining in Ontario. Thank you for the opportunity to speak to you tonight.

There are three things I want to present to you tonight for your consideration.

1. Rick Esbaugh is essentially involved in land speculation. Rick bought land in the hope that he could get it rezoned for an open pit gravel mine.

That's a gamble. A 'gravel gamble' and Rick Esbaugh is a 'gravel gambler'.

Now fair ball to him, that's his risk. But Wilmot Council has no obligation to participate in Rick's land speculation, or to be part of his 'gravel gamble'.

Rick Esbaugh is entitled to is to make an application, but that's all. Wilmot Council has the option to say NO.

I think you will agree with me it's unfortunate, that if you do say no – Rick can appeal to the OLT.

It is the view of many people that NO SHOULD MEAN NO. However, the Ontario government has biased the approvals system to favour 'gravel gamblers' like Rick.

It is exactly because of this bias in favour of the aggregate industry that municipalities like Wilmot are supporting a moratorium on new gravel mining

APPENDIX Q

approvals, to increase the influence of municipalities and communities on location of gravel mines.

2. The planning and noise experts and the lawyer representing Citizens for Safe Ground water have given you legitimate reasons to say NO to the Hallman Pit. I won't repeat their reasons.

   However I will say why it is important you say no.

   This application will be appealed to the Ontario Land Tribunal.
   - Rick Esbaugh will appeal it if you say no to his gravel gamble.
   - Citizens for Safe Ground water will appeal it if you say yes.

   But when you say no you will significantly increase the chances of the community persuading the OLT to say no to Rick Esbaugh

   Saying NO to Rick Esbaugh does not create any risk for Wilmot Council

   Wilmot Council is NOT under any obligation to be a party to the OLT appeal. This means you are NOT required to spend money on experts and lawyers. You may choose to do that - but you are not required to do that.

   It will take quite a while for the appeal to move forward – a future Council can decide if and how it wants to participate in an appeal of the Hallman Pit to the OLT.

   You can show you believe it is important to protect water, farmland and the community's health and safety by voting no.

3. My third point is that the proposed Hallman Pit is not necessary. You have heard there are 7 pits in the Shingletown neighbourhood, right across the road and only 10% of the gravel licenced to be mined there is extracted every year.
   Shingletown does not need the Hallman Pit

APPENDIX Q

Wilmot's director of development services, said there are 15 gravel pit licences in Wilmot that can annually extract up to six million tonnes and Approximately a quarter of that or less is extracted within a year,".

Wilmot Township does not need the Hallman Pit.

The Ontario government has licensed thirteen times more gravel for extraction than is consumed each year
Ontario does not need the Hallman Pit

The neighbourhood, the township and the province do not need the proposed Hallman pit .
And as you have heard tonight - the community doesn't want it.

Rick Esbaugh is the only person who wants this pit and he is the only person who will benefit from it

Summary

You have heard and will hear more about the many ways the proposed Hallman Pit creates risks to the community's drinking water, air quality, community safety and more. I won't add to that list now.

I will say this. Rick Esbaugh wants you to 'roll the dice' on the risks to the health and well-being of your community so that he can profit from his 'gravel gamble'.

Rick Esbaugh is the only one who will win from his Hallman Pit 'gravel gamble'.

Everyone else in Wilmot Township will lose.

I urge you to Vote no to Rick Esbaugh's 'gravel gamble' and the proposed Hallman Pit.

Thank you

APPENDIX R

Presentation to Wilmot Council re: Risks of Hallman Pit

April 4, 2022

By Susan Bryant on behalf of GREN (Grand River Environmental Network)

Good evening Mayor Armstrong, Wilmot Council members and citizens: Thank you for the opportunity to speak. I'm Susan Bryant speaking on behalf of the Grand River Environmental Network and APT Environment in Elmira. Here, I want to sketch briefly the story of the Elmira Water crisis and its aftermath as a cautionary tale about protecting groundwater BEFORE it becomes contaminated. The disastrous groundwater and surface water contamination in Elmira, identified in 1989, was and is one of the worst such events in Ontario. Thirty-some years later, the Elmira community, the Region, the Ontario Ministry, and the chemical facility once called Uniroyal, as well as Ontario taxpayers, are still expending time, effort and money dealing with the fallout. That will go on for the foreseeable future.

When our family moved to the peaceful town of Elmira in the mid 1970s, I never dreamed that activism around groundwater would become a defining part of my life. I didn't even know what groundwater was, though it came out of my taps. But everyone in Elmira learned all about it in 1989 when we suddenly discovered our aquifers were lost, our municipal wells shut down, and our tap water was toxic. As Joni Mitchell sings, You don't know what you've got till it's gone.

Over the next weeks and months, we learned that our very productive aquifer, the town's water supply about 300 meters underground, was contaminated with a toxic brew of <u>hundreds</u> of chemicals. The source was the Uniroyal chemical company where over 40 years, production wastes had been buried in pits all over the site, as well as dumped into overflowing lagoons and into the creek flowing through the property. These included toxic pesticides, fertilizers, DDT, and dioxins from the production of Agent Orange during the Vietnam war. The soil and water on the site was, and still is, saturated with chemicals. The contaminant plume still extends under about half the town. Fortunately, only one chemical, carcinogenic NDMA---the one that was most soluble in water---had reached the two municipal wells. We have never found out for how long we were drinking contaminated water from our taps.

While Elmirans filled jugs of clean water from tanker trucks brought to the fire station, the Region of Waterloo scrambled to build an emergency pipeline from the Kitchener-Waterloo water system to bring water to Elmira. And into the early 1990s, lawyers wrangled over what should be done in several long hearings before the Environmental Appeal Board. The Elmira disaster was thus a story in the media for years. And Elmira suffered the humiliation of being known far and wide as a contaminated community.

APPENDIX R

The Ontario Ministry of Environment finally ordered the company to do the following: 1) Excavate some of the buried waste pits. 2) Contain the contaminated aquifers under their property to keep the contamination from spreading further off the site. 3) Clean up the off-site aquifer to drinking water quality in 30 years (by 2028). About 12 extraction wells on the Uniroyal property and about 8 around the town pump contaminated water out of the aquifers, treat it to remove the contaminants, and dump it into the creek. The idea is to prevent the contamination from spreading. This process will have to go on forever.

It's now clear that the pump and treat method cannot achieve the goal of restoring drinking water by 2028. The contamination is being reduced, slowly. But the aquifers will likely never be clean enough to provide drinking water.

So the key moral of the story is a <u>bad-news lesson</u>. Once groundwater is contaminated with chemicals, it can't be uncontaminated. <u>Preventing</u> groundwater contamination in the first place is the only real fix. Full stop.

However, there's also a <u>good news</u> lesson in the Elmira experience. I've learned that the vigilance and action of ordinary local citizens—and their local government representatives---make a real difference in keeping our water clean.

In the Elmira case, citizen action took place after the crisis, when the damage was done. But it was still meaningful. We had formed a little environment group in Elmira, APT Environment, some months before the crisis. That timing was just plain lucky. We were ordinary, well-behaved residents with little background in science, activism, or environmental issues. When the water crisis hit, we stepped up our game.

But the crisis was traumatic for our small town. For the next ten years, the atmosphere around the issue was adversarial. The attitude of company management at the time was one of contempt, especially for the community activists. The town was invaded by media wanting to get the story of one of the biggest pollution events in Ontario. Thus our proud community felt shamed, and some characterized APT's work as "radical," as inciting people to panic, as giving the town a bad name.

Nevertheless, APT membership grew to about 50 families. We participated in the hearings and wrote comments on every major report and recommendation. We gathered the facts and talked with politicians, community groups, and the media. We had good parties to keep our spirits up. We continue today to participate in the regular meetings between the Ministry, the company, and local governments.

APPENDIX R

Our contributions and vigilance have made the remediation process in Elmira significantly better than it would be without us. We have not won all our battles, but we have achieved much through sheer persistence.

I don't say that to boast--But to encourage all of you who face environmental threats in your own communities. It's hard work to protect your air and water from risky land uses. But it's necessary, meaningful and effective. People who stand up to defend the health of their own back yards—and therefore all of our back yards—are a powerful force. When government regulators, politicians and big companies know that people in the affected community are paying attention, **they** pay attention and you get at least some of what you want.

In Wilmot right now, you have a precious opportunity to proactively reduce risks to your groundwater and thus prevent contamination. The Elmira story illustrates that this, proactive prevention, is a much better path than struggling with the fallout once it happens.

APPENDIX S

April 12 Council presentation

Title picture

Mayor Armstrong, Council, thank you for listening to us here, again, as you will be asked soon **to weigh food and water for all of us against sand and gravel** (for a few).

Picture2 St. Clements pit in Mennonite Country.

My name is Linda Laepple, known by thousands in the Region as the host of Shingletown's annual potatofest over a 12 year period till 2015. My family farms within the 1 km study area on exactly the same soil type and conditions.

Next Picture 3 Areal picture

Why do I care today?

- I care because it must be realized this is not an ordinary piece of farm real estate that can be assessed using common templates. For the safety of the community, it's history needs to be fully investigated and then the entire property assessed and treated accordingly. Not just the residential portion as stated in the side condition report filed with the Ministry.

- I care because, Jackson Harvest Farm and my farm, we operate both in the same source water protected area. Should anything go wrong in the gravel pit when it comes to groundwater contamination, it is very likely that things will first be blamed on me since my family farms next to the Regional wells.

- **I care because the soil in this area allows us to grow almost any crop, it's like gardening on a raised bed. I know after extraction and rehabilitation of the gravel pit it will be like trying to grow something in a leaking bathtub.**

While missing or ignoring relevant information The Hallman pit AIA concluded:

….. minimal impact on the surrounding agricultural activities within the Study Area.
.

Next Picture 4 Land use picture

This where the problem starts:
The Radius of study area is limited to 1 km from the proposed site which leads to false representation of the area and technical errors in the following:

4.2 Land use

4.3.3 Irrigation

4.4 Land fragmentation

5.2 Traffic

Specialty crops

Investments

I like to start with the impact on traffic

- Traffic impact doesn't stop after 1km. We farmers need to use Regional Roads too and so do the added trucks from the pit. About 15 years ago we felt trucking traffic impact first hand. My husband was driving on Queen street between Wittmer and Bleams coming home with 2 loaded hay wagons when a over tired Transport truck driver rear ended him. The impact ripped the tongue off the rear wagon and send the full it flying across the road and ditch into a field. The other wagon on the tractor had its tongue bend to a u shape. It was shear luck the impact was not fatal. Needless to say ever since we avoid driving evenings and plan trips with equipment carefully. The impact of additional truck traffic will be felt far beyond the 1 km radius and should be considered in the study. On Wittmer Road I can not imagine a tractor with duals and or equipment 12 feed wide getting passed oncoming trucks without causing damage to property.

Under 4.2 Land use it reads: .. but for the Study Area only winter wheat was observed.
Showing the entire front of our farm as one field of winter wheat when in fact there were 5 different fields, is a blatant error or false statement.

<u>Next Picture 5 areal crop map</u>

In 2018 multible crops grown along Bleams Road including green peas.

If there was an actual windshield survey done they would have also noted the sign for potatoes on Bleams road, which we grow since over 20 years for farm gate sale and wholesale distribution. Was this specialty crop overlooked on purpose?

4.2.2
Land use
The study reads:
Neither the Subject Lands nor the Study Area is zoned an agricultural special area.

Giving the impression that there are no special crops grown in the area, just common field crops or even the assumption the land is not suited of producing special crops.

If the consultants had treated each property within the 1 km radius as a unit and not just looked at the land fraction within the radius, they would have found very special, specialty crops.

<u>Next 3 Picture 6 to 9 Hmong people's garden</u>

Plus they would have seen a firsthand demonstration of living culture in the word agriculture. They would have seen 2 fields of Asian vegetables grown by Hmong people for their community in town. Vegetables, foreign to me, but grown on the same type of soils as found in the proposed gravel pit, just across the road, on our farm.

4.4 Land Fragmentation –
Agricultural properties in the range of 10.0 – 69.9 acres and 70.0 – 128.9 acres were noted in the surrounding areas.

Next Picture 10 land size:

- Again the strict 1 km radius used, only considers the full size of a parcel when completely inside the study area. It doesn't record the actual size of a parcel that are partially in the study area. Our farm for example is 187 acres in size and my neighbors to the east also in that range. But both our properties are recorded as less than 65 acres.

The study also gives the impression that small parcels are not worth investigation and therefore failed to notice that the 16 acre parcel mentioned as facility numbers 4 to 9, is in fact a research site custom feeding 300 plus head of cattle. The owner having won twice an Premier's Award for Agri-Food Innovation Excellence, for developing a high-temperature composting system that turns manure into garden fertilizer.

Investments
4.3.3 Irrigation, no investment in irrigation on the subject land or the study area.
First of all, these observations were made late August and October when irrigation equipment generally is already packed away and in storage.
In 4.3.4 it is stated that historically a bermed area existed to hold water for mixing and distributing manure but no irrigation equipment was observed. When in fact the hydrological study had an irrigation well recorded that has not been decommissioned to date.

Rehabilitation:

Next Picture 11 soil cross section

The idea of shaving off soil layer by layer and storing it separately and replying it quickly elsewhere sounds good on paper but in reality soil horizons cannot be pealed in layers like an onion. Specially in this area where you have in some areas very little topsoil and often a topsoil subsoil mix as deep as the farmer's equipment worked the land, followed by almost pure sand. The promise to put 50 cm topsoil back when there is only 15 to 30 at its best to begin with, would require massive soil imports and is just not realistic.

- Soil is what sustains us and is the only thing on Earth that actually produces.
- **Everything else on the planet is processing, value adding, shipping, business**. But truly producing are the microbes in the soil. In one handful healthy soil there are more microbes then there are people on this planet. But in the aggregate industry this very base of life on our planet, mother earth, is just part of something called "overburden."

APPENDIX S

When you compare Canadas Landmass with a table set for 28 people. Only two plates would represent farmable areas. And only one of them would represent crop growing areas, the other marginal pasture lands.

But only a small rim of the crop growing plate would represent the area of soil classes as good as we find in Wilmot. With every rezoning from agricultural to another use we are concisely chipping away on the best part of the dinner plate.

Don't sacrifice another chip and assume there will still always be someone out there to feed you.

Mankind has in it's history done without a lot of things and times are changing fast, but we have never done without food and water. Please look at facts not just paper.

Last picture; Praying Manta

APPENDIX T

Good evening Mayor Armstrong and Wilmot councillors.

My name is Kathy Loree. I've lived in Wilmot for over 50 years. Most of those were within 3 km of the proposed pit.

My major objection to this application, is the risk of damaging the aquifer and the groundwater.

As a child, I recall my parents being told, our newly dug Wilmot Centre well, would have enough water, to supply a herd of 20 cattle for years to come. Then, the Region started taking water from the area. The well was never used for livestock, but it, as well as many neighbouring ones dried up. We recall then having to ration, and pay to have our water trucked in. My parents needed to drill a new much deeper well. In rural areas, we are dependent on our wells.

When ALL of us open a tap, we expect clean water to flow.

In the 1960's, I remember a brand new "overflowing or artesian well" on the farm across from the old Wilmot Centre school. Most of the neighbours visited with excitement to see fresh, clean water spurting out the top. It doesn't do that anymore.

A neighbourhood farm had a powerful enough spring that, using gravity, they ran water to their upstairs bathroom without a pump.

Maps of the area show numerous streams running through. Recently, brook trout not seen earlier, have been found in at least one of those streams.

These examples reflect some of the rich water resource history in this immediate area.

Bleams Rd has two road signs as you approach either side of Shingletown. Each reads – "Drinking Water Protection Zone Begins Here". The proposed pit falls within this area. By posting these, The Region has obviously realized the area needs protection.

APPENDIX T

I recently read that the Region, used water from this aquifer to reduce the overall rising salt level in their supply.

We need gravel “in the ground” to continue to filter this valuable resource.

Elmira's water supply will probably never recover despite continued efforts to repair their damaged aquifer.

As others have noted, I am concerned with increased traffic, noise/air pollution and the safety of the Witmer Rd/Queen St intersection.

The fertile farmland will never be replaced. Used gravel pits are rarely returned to a usable state.

We often hike at the Hydrocut near Petersburg. We used to hear many birds and see lots of wildlife there. Since that pit expansion, we don’t see or hear much, other than heavy equipment, loud banging, vibrations and back up alarms.

The "Reform Gravel Mining Coalition" moratorium, is timely and appreciated by many.

Here, we live in a “greenbelt”. This past week I saw it referred to as also being a “blue belt” due to its water resources.

Previous suggestions of approval, or, requests to meet guidelines for this pit are not grounds to go ahead with it.

Many argue that we need this gravel for road and building construction. Some say, "The pit will save the cost of trucking needed gravel here for upcoming growth".

I think - **If the aquifer is damaged, the cost of trucking, or building pipelines, to bring fresh water to the Region, for many years to come, will be much higher than that cost savings.**

The 1972 - “Conversations with North American Indians”, contains an often quoted saying -

"Canada, the most affluent of countries, operates on a depletion economy which leaves destruction in its wake. Your people are driven by a terrible sense of deficiency. When the last tree is cut, the last fish is caught, the last river is polluted; when to breathe the air is sickening, you will realize, too late, that wealth is not in bank accounts and that you can’t eat money."

For all of these reasons, most importantly, the risk of damaging the aquifer and our ground water, I encourage you to vote against this pit approval.

Thank you for your time and consideration.

Nith Valley Ecoboosters
Presentation to Wilmot Council
By Dorothy Wilson
April 4, 2022

Topics

- Wildlife
- Wetlands
- Water

Wildlife Habitat

- Assessment of Significant Wildlife Habitat (SWH)

- Migration corridors

Species At Risk

- Relationship to Significant Wildlife Habitat
- Bats
- Turtles

Wetlands

- Linkages to other wetlands
- Need for studies in spring
- Water balance analysis

Water

- Ground water level
- Contamination risk
- Asphalt recycling


Thank You

APPENDIX V

Citizens for Safe Groundwater- Delegation Apr 4 2022, Lori & Mo Elash

Good evening Mayor Armstrong, Members of Council, and all in attendance. My name is Lori Elash and this is my husband Mo Elash. We have lived at 2229 Bleams Rd in Shingletown for nearly 9 years now and feel truly thankful to call this peaceful rural community 'home.' We are compelled to be here today to add our voices to those representing and supporting Citizens for Safe Ground Water, re-stating the widespread negative results that will likely occur to the groundwater, the farmland, the wildlife, the air quality, and the health and well-being of the community members should this gravel pit be allowed. We are both firmly opposed to the Hallman Gravel Pit proposal. With respect, we expect Council to deny the requested zone change.

We have a 12 acre property, north of the proposed Hallman gravel pit, kitty corner to the inside most point of that property. The proposal indicates that aggregate mining would be in full force in that corner of land, which is about 150 meters from our back door, and from our private well. We are very concerned about the impact it may have on the water quality of our private well, which we rely on for all our water needs. To our knowledge, our private well was not inspected or investigated, and as such it is likely not included in Mr. Esbaugh's hydrogeological report. If this is the case, there is no baseline data, and the impact of the proposed gravel pit on our private well would not be able to be determined. There continue to be outstanding issues and recommendations with this proposal in general and in specific to protect private well owners that have not yet been addressed, nor safeguards committed to (outlined by Samantha Lernout and the Planscape presentations).

Right now, the land in question is quiet, beautiful, productive farmland. This proposal would result in a huge berm instead of beautiful farmland. It would replace the tranquil quiet with loud rumbling vibrations of machinery and constant clanging and beeping of heavy vehicles which would carry throughout our community. Large vehicle traffic would be greatly increased, and the potential contamination of water and air has been shown repeatedly. We rent 8 acres of our land to a neighboring farmer. Water from the neighboring fields washes into and often floods our field in the spring, then soaks into the ground. We don't even want to imagine what the spring runoff might bring with it if this proposal is granted, or how it might affect our farmland.

The proposed gravel pit would also result in unnecessary health concerns for residents. The fine particulate matter from the excavations and extra diesel in the air from the trucks and excavators are likely to cause breathing and other significant health issues, which will only become evident over time.

We implore you to please represent and protect us, your citizens, to consider our well-being and quality of life, and to do what's best for Wilmot Township and beyond by protecting the invaluable and irreplaceable resources of prime farmland and

APPENDIX V

groundwater, the groundwater which supplies not only Wilmot Township but also Waterloo Region.

The research presented by Citizens for Safe Ground Water has shown the overwhelmingly negative consequences of allowing a gravel pit. This gravel pit is unnecessary and detrimental in so many ways, to so many citizens, and will have widespread negative long-term impacts. This gravel pit should not be permitted. Please protect our beautiful community by putting the irreplaceable prime farmland and groundwater first and vote NO to this municipal zone change application. Please put your people's health and well-being first and vote NO to the Hallman Pit. Thank you for your time and consideration.

Thank you,
Lori & Mo Elash

APPENDIX W

I am opposed to the Hallman Pit. My husband and I moved to the area from Waterloo because of the farmland and open space. We are beekeepers and keep 50 hives on 3 local organic farms. The issues with bees includes the loss of forage and the impact of the pit will only add to this issue.

Finally, I am a nurse when Covid started I went back to work at Grand River Cancer Centre. Needless to say I have a focus on clean living which includes the quality of our water. The pit will risk the water table not to mention all the other impacts on health that have been mentioned by other speakers.

Thank you for the opportunity to share my opinion. I hope the council makes the right choice for the community and votes against the Hallman Pit.

Sincerely Catherine Young

APPENDIX X

To Wilmot Township Counsel regarding the Hallman pit.

I have only three brief points to make;

1. Regarding the water issue. There is no correcting the situation if it goes wrong.

2. Mr. Sisco has made the case that because the application has been made it must be approved and that failure to do so somehow constitutes some sort of favouritism to others who are extracting wealth from their properties. The implication being that ownership of a property allows the right to exploit it. So if every second farm in Wilmot was to become a gravel pit that would be fine because there is no point at which the township can say we have enough even though we now have a couple of times more than we need right now.

The appearance now being that the township must place the wealth interests of this kind of exploitation over the interests of the voters. The people you work for.

3. The last concern being that none of these properties have ever been rehabilitated to a useful or natural state.

Thankyou for your consideration

APPENDIX Y

Delegation to Council April 4, 2022 - John Jordan

Good Evening everyone, Mayor Armstrong, Wilmot Council, Staff, and all residents of Wilmot and beyond who are engaged in tonight's meeting.

It's been quite a journey over the past number of years to get where we are tonight in regard to the Hallman Pit. My delegation will not get into any of the nitty gritty study or report details but more to the soft issues at hand regarding the consequences of the rezoning of the Witmer Road property and the affect on future generations.

In looking at this issue from a 40,000 foot level, the main issue that rises to the top is the threat to our water supply. Mr. Esbaugh and his team with knowledge of the various fields at hand, have provided their own reports saying that there will be no threat to the drinking water. At the Citizen's for Safe Ground Water meeting held at the Wilmot Rec Centre before the Pandemic came down on us, I posed this question to this team "Can you with 100% certaintly ensure the water will not be affected?" A lot of words were replied back from the person answering, but in the end, he conceded that they can not with 100% certainty, guarantee that the water will not be affected. Let's let that sink in? If there is any threat to our water supply, why would we take the risk?

The next point after the threat to the drinking water, is that we will be losing many acres of fertile farmland which will no longer grow food. The 2 most important things to survival - food and water - are both either being threatened or taken away completely. Yes, I suppose that after decades of aggregate being mined, dust pollution, noise pollution, and massively increased heavy truck traffic that will affect our environment and drastically change our target numbers for Wilmot's reduction in Greenhouse gas emissions, the topsoil may be put back, but the geology of the land will never be the same and or possibly never farmed again - at least not for many, many generations.

Mr. Mayor, last week on the Mike Farwell show you stated that you can not vote "no" to a gravel pit for the reason of having enough gravel already. You're right, you can't. But let's look at the myriad of all of the other reasons why you should vote no to a zoning change - the dust, the noise, the pollution, the increased truck traffic, the loss of farmland, the quality of life, and most of all, the threat to our

APPENDIX Y

drinking water. If the drinking water is affected, what liability does that put on the Township? Do I need to mention the word Walkerton?

My next point is a very important soft issue and possibly leaning on a technical issue, and this comes squarely on the laps of every council member. You, the Councillors of The Township of Wilmot, have full discretion to make a decision that is either going to affect the residents of this township positively or very negatively. You have full control of voting for or against the issue. No one can tell you that you can only vote in one direction - no one. Recommendations can be made from various personnel, but it is completely up to you to choose the right path - doing the right thing!

I want to provide for you a very important part of the Municipal Act. What I am about to read can be found in the Municipal Act, in Chapter 15 entitled Municipal Liability, Section 448, paragraph (1) and it reads as follows:

Immunity

448 (1) No proceeding for damages or otherwise shall be commenced against a member of council or an officer, employee or agent of a municipality or a person acting under the instructions of the officer, employee or agent ***for any act done in good faith in the performance or intended performance of a duty or authority under this Act or a by-law passed under it or for any alleged neglect or default in the performance in good faith of the duty or authority.*** 2001, c. 25, s. 448 (1).

Council, may I reiterate, that you can not be liable for a decision you make this evening or any other time as long as it is done in good faith. In past history, council and/or staff have had issues brought to them where the talk, or possibly even a threat of legal action could put their personal property in jeopardy. As long as you, the Councillors of The Township of Wilmot, are acting in good faith, you are immune to any actions or proceedings against you while you are acting as a councillor. Please put this part of the Municipal Act in the forefront when making your decision. This decision is not just something that is decided upon and then life continues as normal and mostly unencumbered , this decision will affect many Wilmot residents, and possibly beyond, for many generations to follow either positively, or very, very negatively. This resulting affect rests squarely upon your shoulders and is entirely up to you in this important decision that you make. Please do the right thing!

Concerns regarding the potential hydrological impacts of proposed Hallman Pit

Delegation on April 4th Special Council meeting
Township of Wilmot

Presenter: Yi Wang

Purpose

The Region of Waterloo was responsible for the review and acceptance of the hydrogeological assessment. Technical documents reviewed that led to the Region's acceptance of the hydrogeological assessment included Phase 1 and 2 environmental site assessments, Level 1 and 2 hydrogeological assessments, an environmental services report and a final response letter addressing outstanding concerns.

Key outcomes of the study review and acceptance were:

1. Pit extraction will remain 1.5m above the high water table
2. If recycling occurs on the property, above and beyond the 1.5m separation, an additional 1.0m separation of clay or silt will be established and all runoff will be captured in the recycling area
3. In response to public concerns raised, restrictions have been included with respect to application of calcium chloride for dust suppression.
4. Annual groundwater monitoring around the site will occur for the operational life of the pit and for five years after completion of rehabilitation
5. A detailed spills response plan has been prepared, accepted and will be included within the Aggregate Resources Act (ARA) site plan notes
6. The proponent will adjust the pit floor elevation if future groundwater elevations arise as a result of impacts from climate change

The Region considered all technical reports along with the CSGW commissioned peer review, and was satisfied that the technical documents provided sufficient analysis to demonstrate that the proposed extraction operations and accessory uses would not impact ground water and neighbouring private wells. Sufficient monitoring and contingency provisions will be in place to ensure that operations align with analysis that let to their acceptance.

DEVELOPMENT SERVICES Staff Report No. 2022-003 (Page 6)

My concerns center around the hydrological impacts of the proposed pit extraction which have not been sufficiently evaluated in my opinion.

Cumulative impacts and climate change

Table 12: Water Balance Comparison Before and During Aggregate Extraction

	Pre Extraction			During Extraction		
	Rate	Area	Volume	Rate	Area	Volume
	mm/year	m^2	m^3	mm/year	m^2	m^3
Precipitation	889	522,400	464413.6	889	522,400	464,414
Evaporation From Created Ponds	654	0	0	654	15,185	9,931
Evapotranspiration from Cultivated Lands	489	522,400	255453.6	489	347,400	169,879
Evapotranspiration from Disturbed Lands	245	0	0	245	159,815	39,155
Surplus Water on Cultivated Land			208960			138,960
Surplus Water on Disturbed Land			0			102,921
Surplus Water in Ponds			0			3,568
Infiltrated Water Cultivated Land			104480			69,480
Infiltrated Water Disturbed Land			0			102,921
Infiltrated Water in Created Ponds			0			3,568
Total Infiltration			104480			175,969
Difference Pre Extraction to Post						71,489
Consumption						66,750
Net Increase/Decrease in Water during Aggregate Extraction (m3)						4,739

*from Golder (2006) study 89 L/tonne, licensed for 750,000 tonnes

This analysis shows that for a disturbed area of 17.5 hectares, there is an increase of 4,739 m^3 of surplus water annually due to a decrease in evapotranspiration arising from the loss of vegetation in the disturbed area. It is thus shown that the operation of the wash plant will not result in an overall loss of recharge to the underlying aquifer.

Level 1 and Level 2 Hydrogeological Evaluation for Above Water Table Aggregate Extraction (Page 17)

Hydrogeological Assessment

The Region of Waterloo was responsible for the review and acceptance of the hydrogeological assessment. Technical documents reviewed that led to the Region's acceptance of the hydrogeological assessment included Phase 1 and 2 environmental site assessments, Level 1 and 2 hydrogeological assessments, an environmental services report and a final response letter addressing outstanding concerns.

Key outcomes of the study review and acceptance were:

1. Pit extraction will remain 1.5m above the high water table
2. If recycling occurs on the property, above and beyond the 1.5m separation, an additional 1.0m separation of clay or silt will be established and all runoff will be captured in the recycling area
3. In response to public concerns raised, restrictions have been included with respect to application of calcium chloride for dust suppression.
4. Annual groundwater monitoring around the site will occur for the operational life of the pit and for five years after completion of rehabilitation
5. A detailed spills response plan has been prepared, accepted and will be included within the Aggregate Resources Act (ARA) site plan notes
6. The proponent will adjust the pit floor elevation if future groundwater elevations arise as a result of impacts from climate change

DEVELOPMENT SERVICES Staff Report No. 2022-003 (Page 6)

My concerns:

1. Will the net increase in water result in increase in water table level? If so, if the 1.5 m buffer zone be enough?
2. Will climate change-induced extreme precipitation further impact the level of water table?
3. Adjustment plan?

Potential surface flow

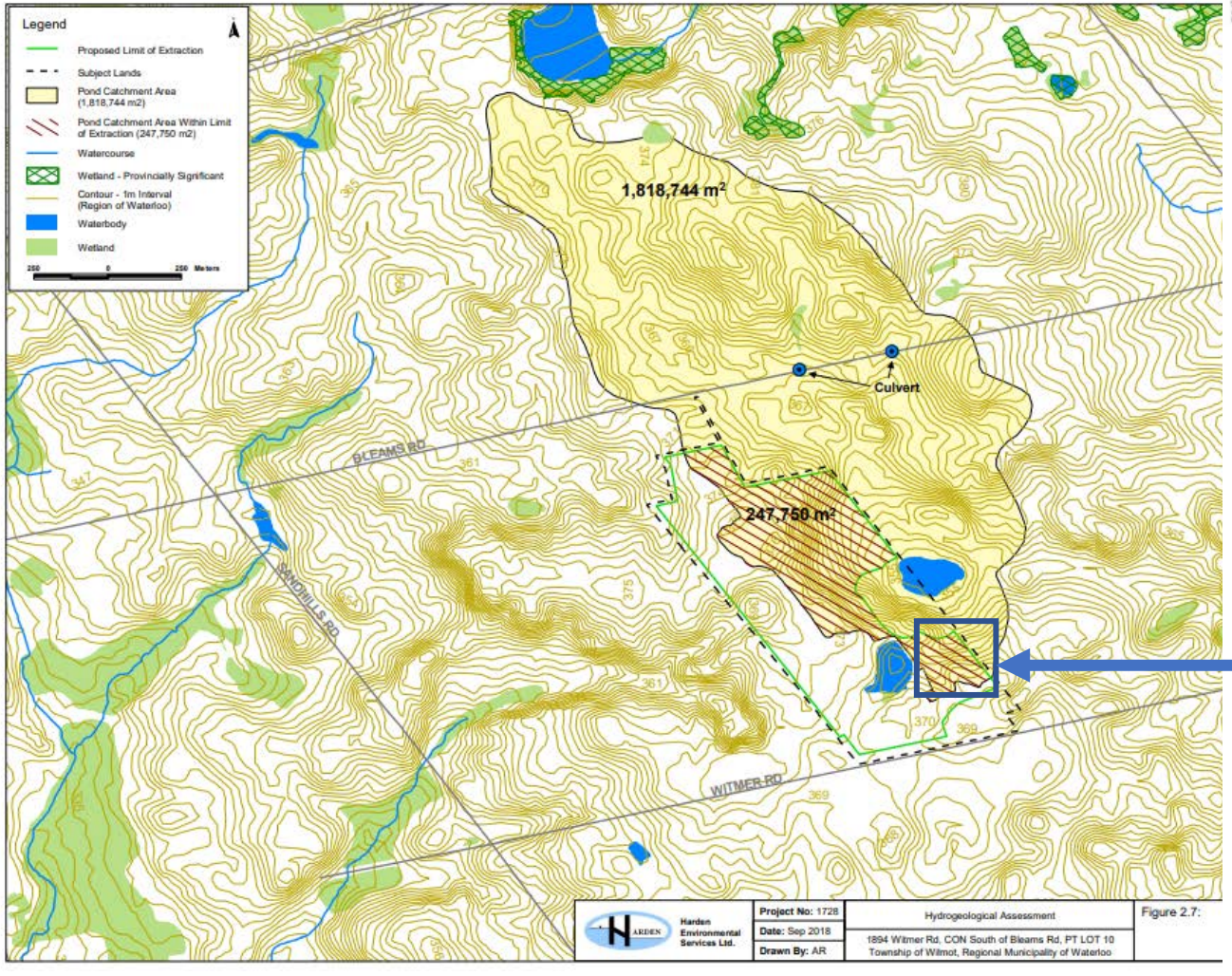

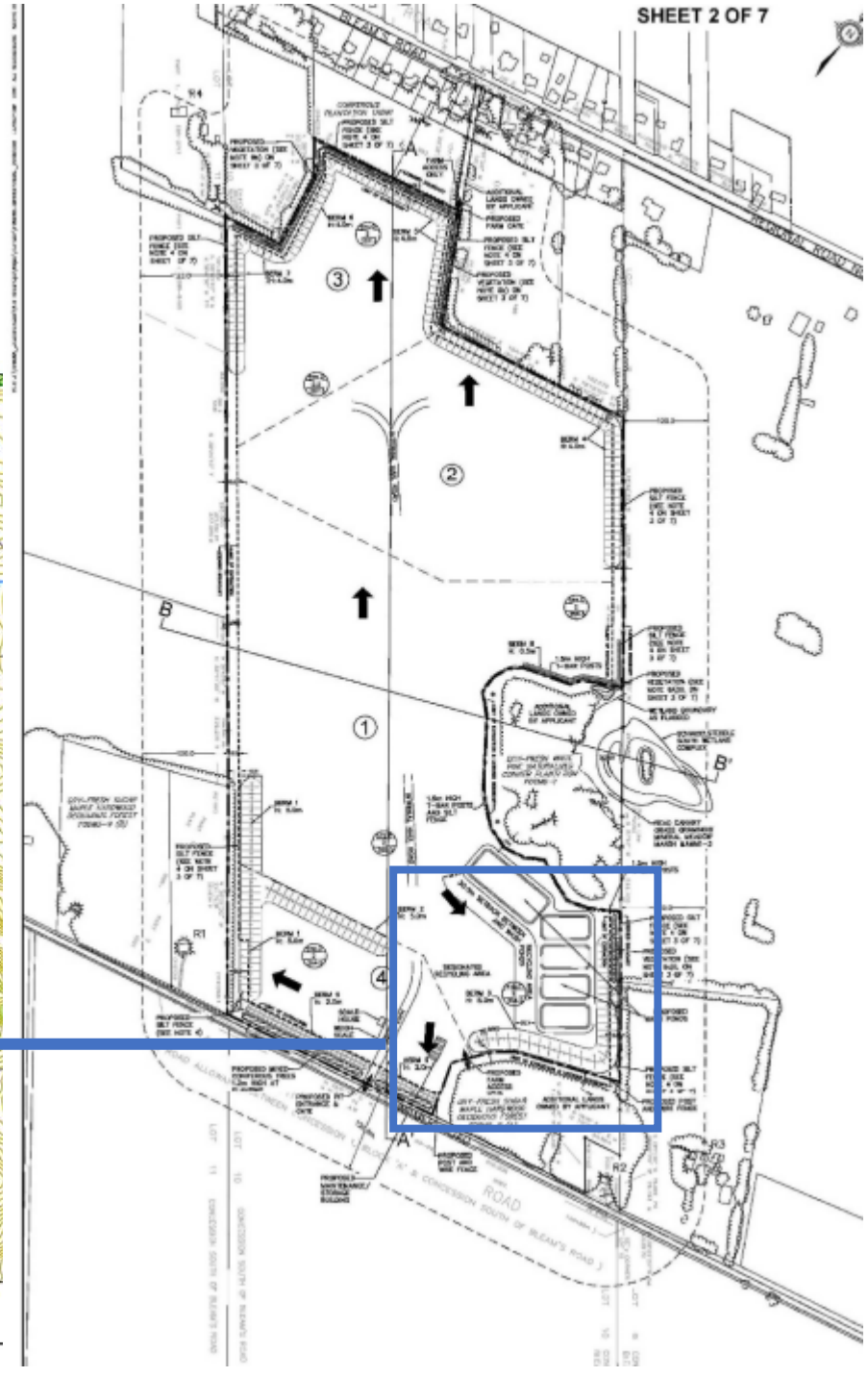

Thank you for listening!

Have a good day!

Waterloo Federation of Agriculture

Wilmot Township Council April 4, 2022

Mark Reusser, Vice-President Waterloo Federation of Agriculture

APPENDIX AA


Township of
Wilmot
SNYDER'S RD EAST
HWY 7/8
BLEAMS RD
OTTAWA ST
159
QUEEN ST
TRUSSLER RD
BRIDGE ST
WALKER RD
Nith River
OXFORD-WATERLOO RD
8 TO STRATFORD

APPENDIX AA


11:23 AM Fri Apr 1
Search here
Country Gardens RV Park
95%
Coco Paving Inc
12
Dundee Country Club
Dino Trucking
1918 Huron Rd, Wilmot, ON N3A ...
Lyndon Fish Hatcheries Inc
Google
©2022 Google - Imagery ©2022 First Base Solutions, CNES / Airbus, Maxar Technologies

APPENDIX AA


11:25 AM Fri Apr 1
95%
Search here
M
Dundee Nursery
& Landscaping
Google
©2022 Google - Imagery ©2022 First Base Solutions, CNES / Airbus, Maxar Technologies

APPENDIX AA


11:27 AM Fri Apr 1
94%
Search here
M
8
7
Township Rd 16
Google
©2022 Google - Imagery ©2022 First Base Solutions, CNES / Airbus, Maxar Technologies

APPENDIX AA


11:28 AM Fri Apr 1
93%
Search here
Kitchener Asphalt Limited
Petersburg Regional Forest
Hydrocut - Snyder's Parking
Tri City Materials
DINO TRUCKING INC
Snyder's Rd E
Golden Triangle Sikh Association
Snyder's Rd E
Snyder's Rd E
Matt's Smokin' Firewood
Snyder's Rd E
Common Scents K9
Google
©2022 Google - Imagery ©2022 CNES / Airbus, Maxar Technologies

APPENDIX AA

APPENDIX AA

APPENDIX AA

APPENDIX AA

APPENDIX AA

APPENDIX AA

APPENDIX AA

APPENDIX AA

APPENDIX AA

Grey Highlands Climate Action Group

TO: Wilmot Council

DATE: March 30, 2022

SUBJECT: Proposed Hallman Pit

The Grey Highlands Climate Action Group is writing to speak out against the proposed Hallman Pit and support the local citizens who have expressed their grave concerns and delegated against granting the zoning change from Agriculture to Aggregate.

Our reasons include the following:

- The proposed pit will diminish road safety, put groundwater supplies at risk, and threaten the surrounding wetland.
- During this era of climate change adaptation, the focus of municipal councils needs to be on the highest and best sustainable use of land for sequestration, food production, and ecosystem conservation
- Recent changes to the Aggregate Resources Act advise against continued profligate issuing of licences. Both the Canadian Environmental Law Association (CELA) and Conservation Ontario, in their submissions at the time Bill 132, Section 16, was passed at the end of 2019, called for definition of key terms such as “routine site plan amendments” and “low risk activity” and “routine activities” which figure importantly in this section of the Act. For example, there is a provision allowing for “self-filing” of changes to the site plan for so-called “routine activities”. Leaving operators to decide what’s routine and what’s perhaps, high risk, is obviously not in the public interest. CELA and CO also asked that applications to extract below the water table be extremely rare and with public input.
- As observed by the Reform Gravel Mining Coalition, Ontario has more than enough aggregate. There is no need for more at this point.

- According to the zoning application on the township's website, an air quality assessment has not been completed. (Well and Tribune Report)

As Roger Farnan of Citizens for Safe Groundwater has pointed out in relation to the proposed pit, government officials are under the obligation to protect public safety. Therefore, we strongly recommend that on April 4 Wilmot Councillors vote against the zoning change.

Yours truly,

On behalf of the Grey Highlands Climate Action Group:

Julie Reitzel

Rob Spackman

Judy Halpern

Bev Falco

Joyce Hall

John Butler

Jeanette Parry

On behalf of the Grey Bruce Climate Action Network:

Vitold Kreutzer

Lorraine Sutton on behalf of Climate Action Now

Lesley Lewis

John Anderson

Rod Layman

Nikki May

Danuta Valleau

Odette Barnicki

APPENDIX BB

Suzane Wesetvik

APPENDIX CC

Mr. Mayor and Wilmot Council,

My name is Lisa Fabick. Our family of six moved to Petersburg in February 2020. My husband and I came out to the area a number of times before purchasing the property at 2138 Witmer Road, and noticed how quite the area was. This is our dream home, this is our retirement, this is our family home. Our home is 1.5 kilometers from the proposed gravel pit, with a private well on our property.

My husband has a safety critical position of Engineer/Conductor with a local Railway. His job requires that he has at least 8 hours of rest before attending for his shift.

If the gravel pit is approved under this proposal, my husband will not get the required minimum 8 hours of rest that his job requires, with a nuisance of vibrations from rock crushers and noise that would not allow him sleep during the day. For us this would mean that my husband would not be fit for duty for his job. This would cause us financial hardship of he was unable to attend at his job due to a nuisance of noise and vibration.

As a landowner/homeowner we have the right to unfettered use and enjoyment of our property. Having a nuisance of noise, dust and vibrations of an adjacent property will cause us not only financial hardship but will also wear on our mental health and well being. It will also prevent us from growing our own food on our property. We have been growing our own vegetables and fruit for the last two years.

Will our garden vegetables be able to be eaten by my family if they are covered in silica dust?

I would like to pose a question to not only the applicant but also to Mayor Armstrong and to Council.

Would you live next door to a gravel pit?

If you were living on Witmer road, or in Shingletown and did your research, like our Wilmot Community has done, would you not fight for the best possible outcome, which is to say no to the gravel pit going in our backyards?

Question for the Applicant:

Could you not propose a license/operating lease agreement to the other 7 gravel pits in the area, and propose that you use their already open and operating gravel pits to help your cause? I ask this because there are other options than putting the gravel pit on Witmer Road.

Why not try to work with the Wilmot Community who is saying no to your proposal. There are other options. We just have to think outside the box where we can meet in the middle and both sides can win. The community saying no to your proposal means we care about what happens here. We care about our neighbours, friends and community.

My family and I oppose this application.

Thank you Mayor Armstrong and Council for taking the time to hear us, your neighbours, your friends, voters, taxpayers and members of the Wilmot Community.

Council Meeting Minutes

Regular Council Meeting

April 11, 2022, 5:00 P.M.
Virtual Location

Members Present: Mayor L. Armstrong
Councillor A. Hallman
Councillor C. Gordijk
Councillor B. Fisher
Councillor J. Gerber
Councillor J. Pfenning

Staff Present: Chief Administrative Officer, S. Chambers
Director of Corporate Services/Treasurer P. Kelly
Director/Curator Castle Kilbride T. Loch
Director of Information and Legislative Services/Municipal Clerk D. Mittelholtz
Director of Development Services H. O'Krafka
Karl Jeffreys
Manager of Planning/EDO A. Martin
Manager of Information and Legislative Services/Deputy Clerk T. Murray

---

1. MOTION TO CONVENE INTO CLOSED MEETING (IF NECESSARY)

2. MOTION TO SUSPEND RULES OF PROCEDURE (MEETING START TIME)

Resolution No. 2022- 92

Moved by: Councillor C. Gordijk
Seconded by: Councillor J. Pfenning

THAT Council suspend the rules of procedures and begin the April 11, 2022, Regular Council Meeting at 5:00 pm.

Motion Carried

3. MOMENT OF SILENCE

4. TERRITORIAL ACKNOWLEDGEMENT

Councillor A. Hallman read the Territorial Acknowledgement.

5. ADDITIONS TO THE AGENDA

6. ADOPTION OF THE AGENDA

Resolution No. 2022- 93

Moved by: Councillor B. Fisher
Seconded by: Councillor A. Hallman

THAT the Agenda as presented for April 11, 2022, be adopted.

Motion Carried

7. DISCLOSURE OF PECUNIARY INTEREST UNDER THE MUNICIPAL CONFLICT OF INTEREST ACT

8. MINUTES OF PREVIOUS MEETINGS

Resolution No. 2022- 94

Moved by: Councillor J. Gerber
Seconded by: Councillor J. Pfenning

THAT the minutes of the following meetings be adopted as presented:

Regular Council Meeting March 28, 2022.

Motion Carried

9. PUBLIC MEETINGS

10. PRESENTATIONS

11. CONSENT AGENDA

Resolution No. 2022- 95

Moved by: Councillor J. Pfenning
Seconded by: Councillor C. Gordijk

THAT Report Number ILS-2022-14 be received for information.

Motion Carried

11.1 New Dundee Union Cemetery Alteration Approval, ILS-2022-14

12. REPORTS

12.1 Proposed Designation of Portion of the Former Livingston Flax Mill Property, ILS-2022-12

The Director of Information and Legislative Services / Municipal Clerk outlined the report.

Marg Rowell and Yvonne Zyma, Heritage Wilmot Advisory Committee provided an overview of the proposed designation. The presentation is attached as Appendix A.

Stewart Snyder and Ted Oldfield appeared as delegations in opposition to the designation of the property, noting that the property has no purpose with the current structures intact.

The Director of Information and Legislative Services clarified the designation process and confirmed it would apply to only the property described in the resolution.

Council suggested that the neighbouring properties have a greater historical significance as part of the greater Livingston Flax Mill Site and that the Committee should proceed with evaluating that property for heritage designation.

The Director of Development Services confirmed that if the motion is defeated the demolition permit could be issued tomorrow and that Mr. Snyder would be encouraged to discuss preservation of materials with Heritage Wilmot.

Resolution No. 2022- 96

Moved by: Councillor B. Fisher
Seconded by: Councillor C. Gordijk

THAT Council consider the recommendation from Heritage Wilmot Advisory Committee concerning designation of a portion of the property known as the former Livingston Flax Mill Property, Baden, being Plan 627 Lots 165 to 168, 173, 174, Part Lot 169, Part of Charles Street, Plan 633 Lot 5 RP 58R6700 Part of Part 1, Township of Wilmot, as a property of

Historical and Architectural Significance under Part IV of the *Ontario Heritage Act, R.S.O., 1990,* as amended.

Motion Defeated

12.2 Election Governance Documents and Ward Boundary Review Information, ILS-2022-13

The Director of Information and Legislative Services outlined the report.

Staff were directed to prepare a Governance Policy for Ward Boundary Reviews.

Staff were directed to provide a list of municipal sponsored events to ensure that candidates are not using municipal resources during those events.

Resolution No. 2022- 97

Moved by: Councillor C. Gordijk
Seconded by: Councillor B. Fisher

THAT Report ILS 2022-13 be received for information purposes;

THAT Governance Policy 22-002 regarding the Use of Municipal Resources During a Municipal Election be endorsed; and further,

THAT By-law Number 2022-17, a By-law to Adopt a Recount Policy, be adopted.

Motion Carried

13. CORRESPONDENCE

14. BY-LAWS

Resolution No. 2022- 98

Moved by: Councillor C. Gordijk
Seconded by: Councillor J. Pfenning

THAT By-law No. 2022-17 be read a first, second and third time and passed in open Council.

Motion Carried

14.1 By-law No. 2022-17 A By-law to Adopt a Recount Policy

15. NOTICE OF MOTIONS

16. ANNOUNCEMENTS

16.1 Councillor C. Gordijk advised that On April 12, 1980, Terry Fox dipped his artificial leg in the Atlantic Ocean in St. John's and said, "This is the day that it all begins." Noting that over the next 143 days during his Marathon of Hope, and every day of the 42 years since then, Terry has united Canadians in a way never seen before or since. The Wilmot Terry Fox Run will be commemorating this historic occasion by raising a Terry Fox Lives Here flag on Erb Street in St. Agatha, which will fly throughout the week. She thanked local resident Janet Ott for helping with this.

16.2 Councillor C. Gordijk noted that Cakr Maker in New Hamburg recently hosted a cupcake fundraiser, and Martha McClew, the Ontario director of the Terry Fox Foundation, bought 48 cupcakes that she asked be donated to a local worthy cause. The Wilmot Terry Fox co-chairs chose the Wilmot Family Resource Centre as the recipient for distribution to their clients.

16.3 Councillor C. Gordijk advised that at noon, April 12, final bids will be received for a commemorative Terry Fox plaque that was donated by John and Kathie Jordan. All proceeds from the auction will be donated to the Foundation. Visit WilmotTerryFox.ca/auction to place a bid.

16.3 Councillor C. Gordijk noted TCP's production of Murder on the Orient Express. Tickets are now on sale for the play which runs from May 4 to 15th.

16.3 Councillor J. Pfenning noted that volunteer opportunities to assist in the Ukrainian refugee efforts. She noted there may be opportunities in the future to support Ukrainian farmers and encouraged others to get involved in any way they can.

17. BUSINESS ARISING FROM CLOSED SESSION

18. CONFIRMATORY BY-LAW

Resolution No. 2022- 99

Moved by: Councillor C. Gordijk
Seconded by: Councillor J. Pfenning

THAT By-law No. 2022-18 be introduced, read a first, second, and third time and finally passed in Open Council.

Motion Carried

19. ADJOURNMENT

Resolution No. 2022- 100

Moved by: Councillor J. Gerber
Seconded by: Councillor J. Pfenning

THAT we do now adjourn to meet again at the call of the Mayor.

Motion Carried

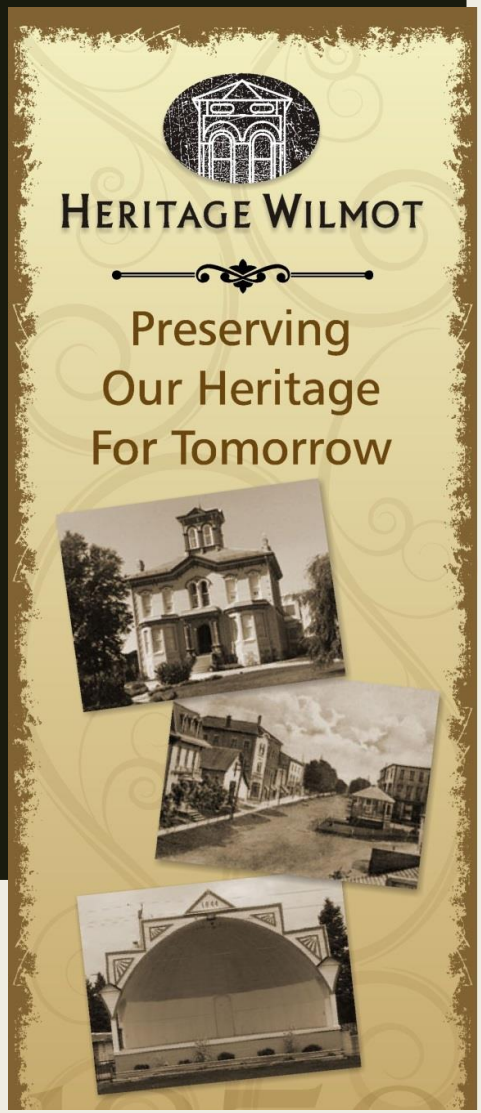

Heritage Wilmot Presentation:

Former Livingston Mill Designation

Date: April 11, 2022
Presented by: Marg Rowell, Vice-Chair
Heritage Wilmot Advisory Committee

Former Livingston Flax Mill / Linseed Oil Company

Located between 88 Charles Street and 76 Mill Street, Baden

Area proposed to be demolished

Background Info:

Ontario Heritage Act (OHA)

- The OHA requires municipalities to establish a heritage register of designated properties.

- The Act also allows municipalities to contain properties on the heritage register that are not designated, but that the municipal heritage committee believes are of heritage value.

- Including properties on the Non-Designated Heritage Register flags them as being important to the municipality. It also provides for additional review should demolition be proposed. Often this will require additional study requirements if development is proposed onsite or adjacent.

Why are properties included on the Non-Designated Heritage Register?

- ✓ Provides accessible information about cultural heritage.
- ✓ Recognizes properties of cultural heritage value in Wilmot Township; promotes knowledge and enhances the understanding of Wilmot's cultural heritage.
- ✓ Demonstrates Council's commitment to conserving cultural heritage resources.
- ✓ It is a planning document that will be consulted by municipal decision makers when reviewing development proposals or permit applications.
- ✓ While these properties are not officially designated, they are considered of historic importance and value to the Township of Wilmot, much the same as designated properties.

Background Info:

Heritage Register of Non-Designated Properties

HERITAGE REGISTER OF NON-DESIGNATED PROPERTIES
FOR THE TOWNSHIP OF WILMOT
(SEPTEMBER 27, 2021)
*NEW PROPERTIES ARE NOTED IN YELLOW

*All Roll numbers start with 30-18.

Photo	Name of Building/Roll #	Year Built	Property Location/ Closest Settlement Area	Mailing Address	Legal Address
BADEN					
	Wettlaufer / Eidt House 090-010-06200	1846	3664 Erb's Road **Baden**	Baden	CON NORTH OF ERB'S RD, PT LOT 22
Cultural Heritage Value/ Heritage Attributes Georgian, 2 storey, granite fieldstone with gable roof and front porch; Front façade: 3 bays in each storey; 1st floor: 1/1 rectangular window on left of entrance door with rectangular transom and sidelights, one rectangular 2/2 window to right of door; 2nd floor: one 2/2 window on left and in centre, one 1/1 window on right; "S-shaped" tie rod at attic floor level. The original owner, Friedrich Wettlaufer, bought the south ¼ from John Rocker in 1839.					
	Shantz / Hunsberger House 090-009-00300	1848	2417 Erb's Road **Baden**	Baden	PART LOT 12, CON SOUTH, ERB'S RD
Cultural Heritage Value/ Heritage Attributes Georgian; 2 storey, granite fieldstone; 4 over 4 bays, gabled dormers on roof are a later addition. One of the oldest houses in the township, it was built by pioneer David Y. Shantz, after whose family Shantz Mennonite Church was named.					
	Hilborn General Store 040-006-02000	1854	55 Snyder's Road West **Baden**	Baden	PLAN 627, LOT 130, PT LOT 129 RP58R4327 PTS 2 & 3

1

Photo	Name of Building/Roll #	Year Built	Property Location/ Closest Settlement Area	Mailing Address	Legal Address
	Livingston Linseed Oil Mill / Baden Feed & Supply 040-006-09610 040-006-09600 (store) 040-006-07120 (remainder of the property including the grain bins etc).	c.1870	75 Charles Street **Baden** 76 Mill Street **Baden**	Baden	PLN 627 LOTS 112 TO 114, 119 120 126 TO 128 183 TO 190 199 TO 201 PT MILL POND RP58R6700 PT 2 PLN 627 LOT 165 to 168 173 174 181 182 PT LOT 169 PT
Cultural Heritage Value/ Heritage Attributes Industrial; a series of brick buildings that are directly related to the operation of James Livingston's flax business that manufactured linseed oil c.1867 in Baden. Some buildings contain elevators, various multi-paned windows and one notable section is where the train would enter for the product to be unloaded into hopper cars. The oldest building is a 1 storey building currently painted white and has 8 sections divided by pilasters. The top of each section has corbelled brickwork. Historic use of the various buildings includes: oil works, elevator, iron oil tanks, boiler/engine room, warehouse, and oil storage.					

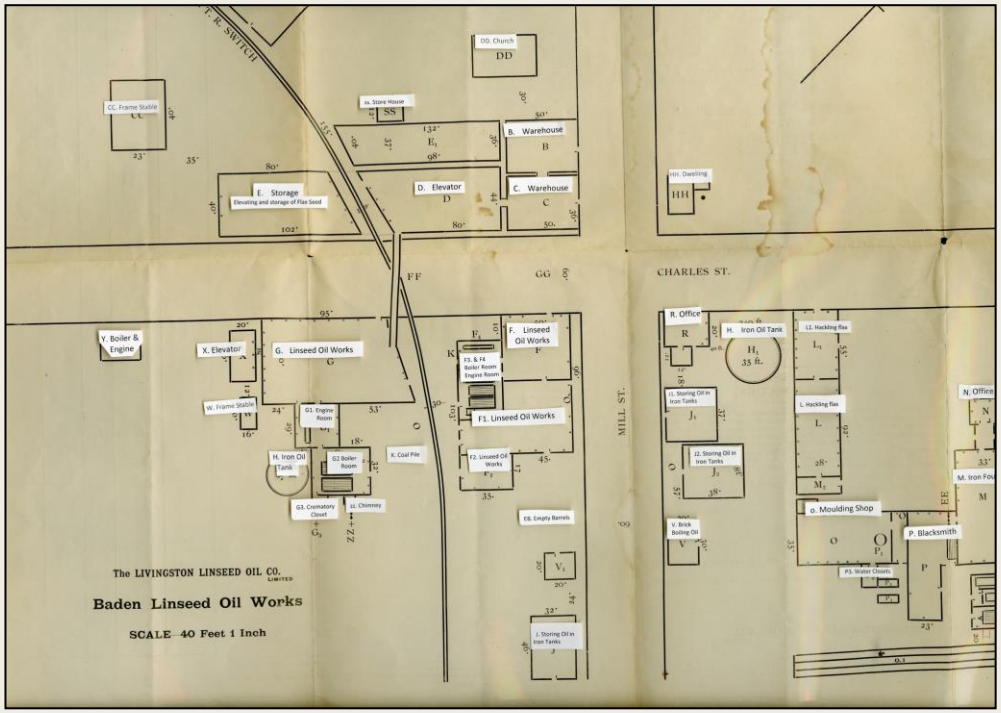

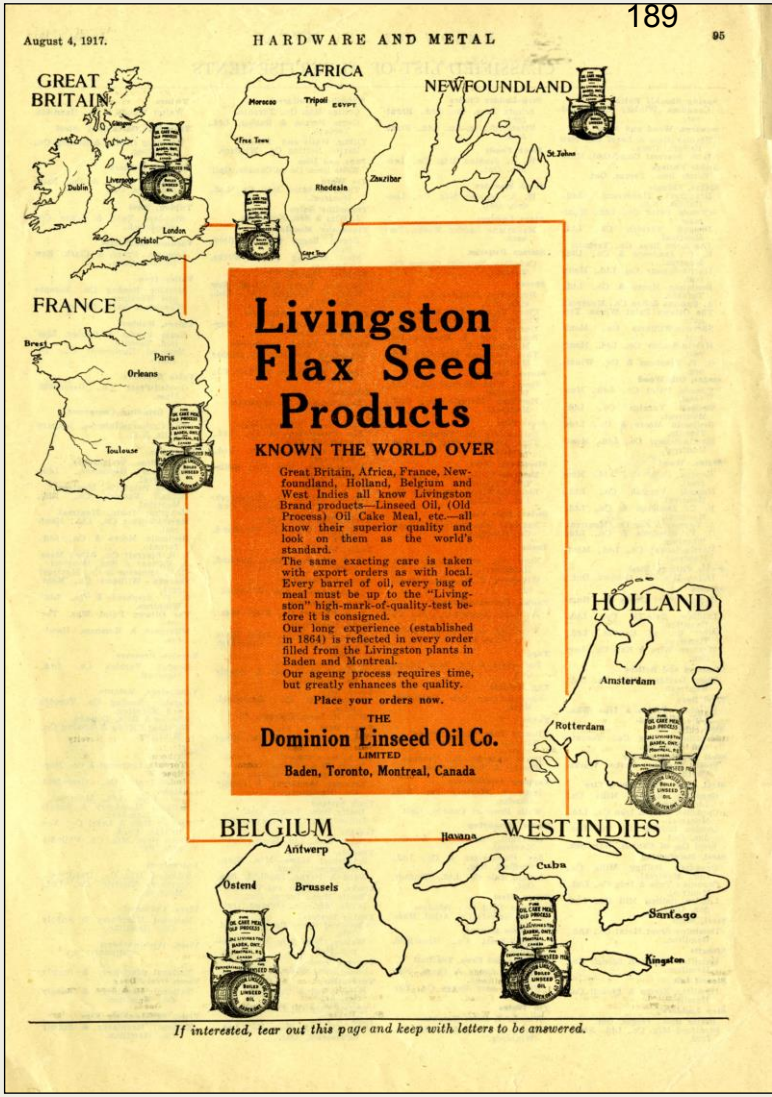

August 4, 1917. HARDWARE AND METAL 95

GREAT BRITAIN
Dublin
Liverpool
London
Bristol

AFRICA
Morocco
Tripoli
EGYPT
Free Town
Zanzibar
Rhodesia
Cape Town

NEWFOUNDLAND
St. Johns

FRANCE
Brest
Paris
Orleans
Toulouse

Livingston Flax Seed Products

KNOWN THE WORLD OVER

Great Britain, Africa, France, Newfoundland, Holland, Belgium and West Indies all know Livingston Brand products—Linseed Oil, (Old Processa) Oil Cake Meal, etc.—all know their superior quality and look on them as the world's standard.

The same exacting care is taken with export orders as with local. Every barrel of oil, every bag of meal must be up to the "Livingston" high-mark-of-quality-test before it is consigned.

Our long experience (established in 1864) is reflected in every order filled from the Livingston plants in Baden and Montreal.

Our ageing process requires time, but greatly enhances the quality.

Place your orders now.

THE
Dominion Linseed Oil Co.
LIMITED
Baden, Toronto, Montreal, Canada

HOLLAND
Amsterdam
Rotterdam

BELGIUM
Antwerp
Ostend
Brussels

WEST INDIES
Havana
Cuba
Santago
Kingston

If interested, tear out this page and keep with letters to be answered.


ESTABLISHED 1864
RAW LINSEED OIL
BOILED LINSEED OIL
VARNISH LINSEED OIL
COMMERCIALLY PURE FLAX SEED
PURE OIL CAKE MEAL OLD PROCESS
PURE LINSEED MEAL
DOMINION LINSEED OIL Co.
LIMITED
Manufacturers & Refiners of Livingston Brands
"BADEN BOILED"
PURE LINSEED OIL, OIL CAKE & MEAL.
EVERY PRODUCT GUARANTEED
RAW & AGED
HEAVY RAW & BOILED
PALE & EXTRA PALE BOILED
DOUBLE & HEAVY BOILED
VARNISH & REFINED
BADEN
OWEN SOUND
TORONTO
MONTREAL

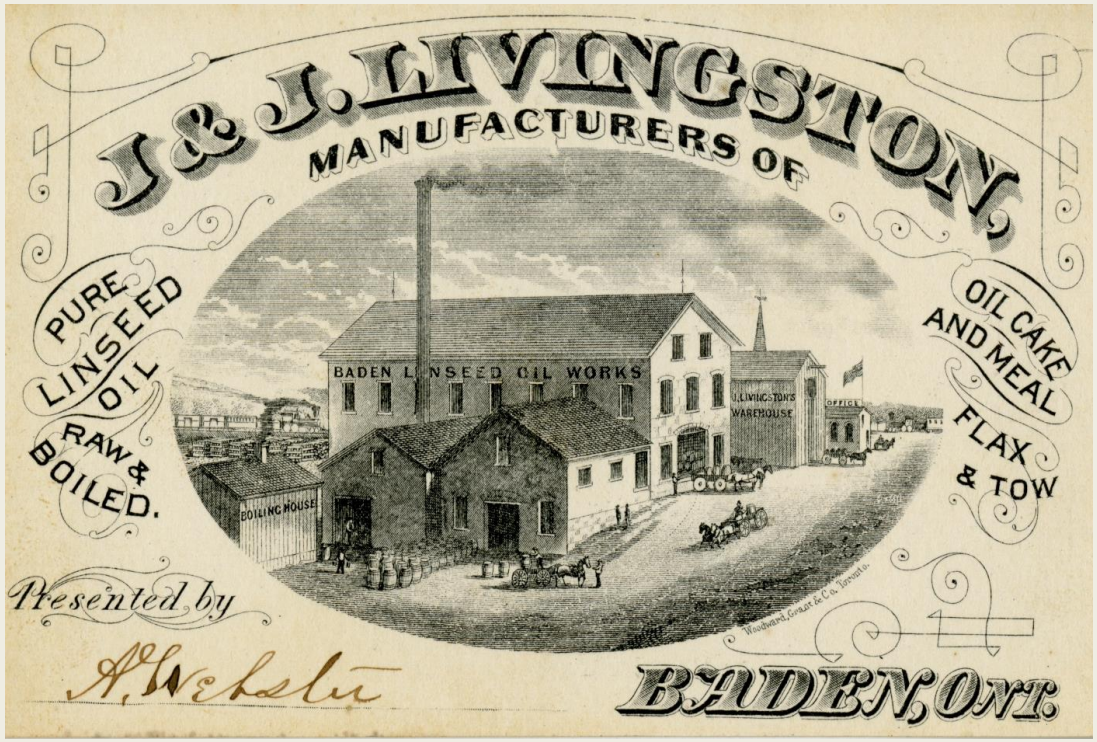
J. & J. LIVINGSTON,
MANUFACTURERS OF
PURE LINSEED OIL
RAW & BOILED.
OIL CAKE AND MEAL
FLAX & TOW
BADEN LINSEED OIL WORKS
BOILING HOUSE
J. & J. LIVINGSTON'S WAREHOUSE
OFFICE
Presented by
A. Webster
BADEN, ONT.


PURE OIL CAKE MEAL OLD PROCESS
J.&J. LIVINGSTON
BADEN - ONT.
AND
MONTREAL - P.Q.
CANADA
J.&J. Livingston
BRAND
WHEN BUYING OIL CAKE MEAL DEMAND THE ABOVE BRAND
None Better than the Best -


Livingston Brand
RAW LINSEED OIL
BOILED LINSEED OIL
DOUBLE BOILED LINSEED OIL
WHEN BUYING LINSEED OIL DEMAND THE ABOVE BRAND
"The kind your Grandfather used"

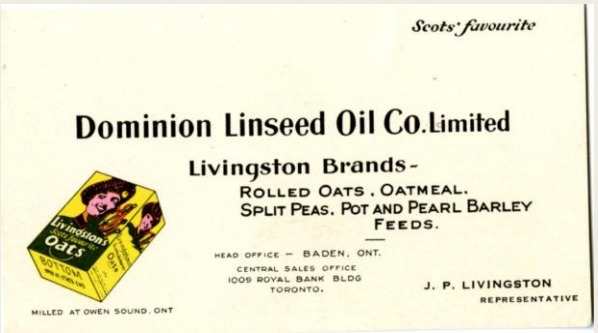
Scots' favourite
Dominion Linseed Oil Co. Limited
Livingston Brands -
ROLLED OATS. OATMEAL.
SPLIT PEAS. POT AND PEARL BARLEY
FEEDS.
HEAD OFFICE - BADEN, ONT.
CENTRAL SALES OFFICE
1009 ROYAL BANK BLDG
TORONTO.
J. P. LIVINGSTON
REPRESENTATIVE
MILLED AT OWEN SOUND, ONT

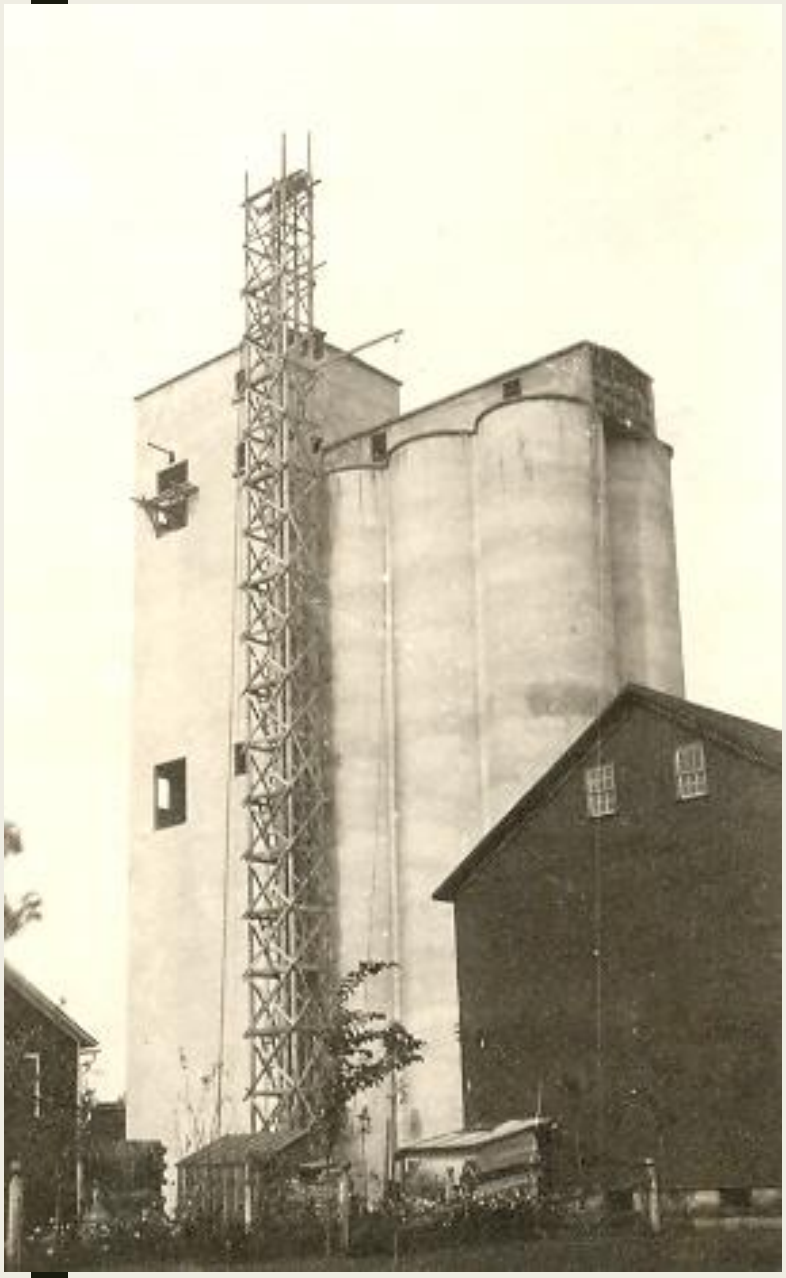

Concrete silos & associated structures proposed to be demolished

What is Designation?

- It is a way of publicly acknowledging a property's value to a community.
- It helps to ensure the conservation of these important places for the benefit and enjoyment of present and future generations.
- Is a legal process outlined in the Ontario Heritage Act, created to preserve the unique heritage of our province.
- Designation registers the property as a historically significant property.
- Is a way for a property owner to display pride in their property.
- A designation protects and preserves Canada's heritage!

Criteria for Designation:

The Livingston Mill property meets all three (3) criteria under OHA

Historical/Associative Value:

- Relates directly to the J & J Livingston/ Dominion Linseed Oil Company of Canada, especially business magnate and Flax Mill King of Canada, James Livingston. The operation is associated to his residence Castle Kilbride, which was deemed a National Historic Site by the Historic Sites and Monument Board of Canada in 1995.

Contextual Value:

- Is both physically and historically linked to its surroundings and represents early industrial history for Wilmot Township.

Physical Value:

- Is representative of early industrial architecture and tells a story for the community.

"That the Heritage Wilmot Advisory Committee recommend to Wilmot Council that the Clerk and Director/Curator proceed with the designation process of the unaddressed property between 88 Charles Street and 76 Mill Street in Baden in accordance with the Ontario Heritage Act." (March 15, 2022)

Conclusion

HERITAGE WILMOT

- The Livingston Mill property was recommended and endorsed by Council in 2015 because it was seen as having cultural heritage value.

- Currently the property is zoned industrial and demolishing it now for potential housing (without the new zoning approval) would permanently erase the historical, contextual and physical value that tells an important story.

- Incorporating industrial features into future development is worth investigating to explore opportunities of potential adaptive reuse of silos/ agricultural features.

- Conserving an existing heritage building to give a new purpose or life, highlights its history and past purpose rather than building anew. Repurposing is an attractive option that is both practical and visually interesting.

- **Heritage Wilmot requests Council to approve that the Director of Clerks Services initiate steps for designation under Part IV of the *Ontario Heritage Act.***

Thank you

CORPORATE SERVICES
Staff Report

REPORT NO:	COR 2022-016
TO:	Council
SUBMITTED BY:	Patrick Kelly CPA, CMA, Director of Corporate Services / Treasurer
PREPARED BY:	Ashton Romany CPA, Manager of Finance / Deputy Treasurer Patrick Kelly CPA, CMA, Director of Corporate Services / Treasurer
REVIEWED BY:	Sharon Chambers, CAO
DATE:	April 25, 2022
SUBJECT:	2021 Audited Financial Statements

RECOMMENDATION:

THAT Report COR 2022-016 regarding the 2021 Audited Financial Statements be received for information purposes.

SUMMARY:

The Township of Wilmot financial results for 2021 were audited by Graham Matthew Professional Corporation in March and April 2022. The results of the audit will be presented by Mike Arndt CPA, CA.

BACKGROUND:

In accordance with the Municipal Act 2001, Section 296 Section 5, the auditor of a municipality shall report to the council of the municipality the audited financial report at the conclusion of the annual audit.

Municipalities are also required to submit a copy of the Financial Information Return (FIR) together with the audited financial statements to the Ministry of Municipal Affairs and Housing (MMAH). The Township was recognized by MMAH in August 2021, with the Financial

Information Return Award. This award recognized the efforts of Township staff in ensuring that timely, reliable and accurate financial information is supplied to the ministry on behalf of the municipality.

A copy of the 2021 FIR was submitted to the Ministry of Municipal Affairs and Housing on March 28, 2022, and posted to the Ministries public facing website on March 31, 2022.

REPORT:

Graham Mathew Professional Corporation LLP was retained by the Township to prepare audited financial statements. The interim audit occurred in November 2021, and the year-end audit was completed in April 2022.

Attached to this report is the 2021 audited financial report for the Township of Wilmot, dated April 25, 2022, for information purposes.

Mr. Mike Arndt, CPA, CA of Graham Mathew Professional Corporation will be in attendance to highlight the report.

Upon Council approval, a copy of the 2021 Audited Financial Statements will be posted to the Township website.

ALIGNMENT WITH THE TOWNSHIP OF WILMOT STRATEGIC PLAN:

This report is aligned with the Strategic Plan goal of Responsible Governance through the action of Fiscal Responsibility. The public disclosure of financial information to Council and the community adheres to the requirements of the Municipal Act, and the Township's Policy on Accountability and Transparency.

ACTIONS TOWARDS UNITED NATIONS SUSTAINABLE DEVELOPMENT GOALS:

This report is aligned with the UN Sustainable Development Goal # 16 for Peace, Justice and Strong Institutions.

FINANCIAL CONSIDERATIONS:

The overall financial position of the Township remains relatively strong with a slight decrease in cash offset by an increase in investments.

ATTACHMENTS:

- 2021 Audited Financial Statements

Financial Statements of

THE CORPORATION OF THE TOWNSHIP OF WILMOT

Year ended December 31, 2021

THE CORPORATION OF THE TOWNSHIP OF WILMOT

INDEX

THE CORPORATION OF THE TOWNSHIP OF WILMOT
SIX-YEAR FINANCIAL REVIEW (UNAUDITED)
(All dollar amounts are in (000's) of dollars, except per capita figures)

	2021	2020	2019	2018	2017	2016
POPULATION at the end of the year	22,041	21,957	21,850	21,643	21,429	21,151
AREA in acres at the end of the year	65,767	65,767	65,767	65,767	65,767	65,767
EMPLOYEES - continuous full time	75	73	66	65	62	62
NUMBER of households	8,085	8,059	7,991	7,757	7,681	7,581
ASSESSMENT - Taxable assessment upon which the year's rates of taxation were set						
Residential, multi-residential and farm	3,723,677	3,692,029	3,496,578	3,298,092	3,113,367	2,960,690
Commercial - all classes	149,259	149,972	140,862	132,920	131,630	128,835
Industrial - all classes	47,348	42,383	41,063	39,741	37,009	39,948
Pipeline & Managed Forests	18,399	17,995	16,570	15,070	13,740	12,984
Total	3,938,683	3,902,379	3,695,073	3,485,823	3,295,746	3,142,457
Per capita	$ 178,698	$ 177,728	$ 169,111	$ 161,060	$ 153,798	$ 148,573
Commercial and industrial, as a percentage of taxable assessment	5%	5%	5%	5%	5%	5%
Exempt assessment	$ 120,576	$ 121,622	$ 118,614	$ 114,627	$ 110,821	$ 114,611
TAX ARREARS - per capita	$40.25	$56.88	$48.86	$50.65	$38.14	$40.90
- percentage of current levy	2.59%	3.65%	3.26%	3.45%	2.66%	2.80%
EXPENDITURE - general municipal purposes	$ 21,500	$ 20,765	$ 19,585	$ 19,133	$ 19,442	$ 18,591
TRANSFERS TO THE REGION	$ 18,869	$ 20,364	$ 17,943	$ 17,287	$ 16,766	$ 16,394
TRANSFERS TO THE SCHOOL BOARDS	$ 7,021	$ 7,554	$ 7,612	$ 7,580	$ 7,535	$ 7,644
REVENUE FOR GENERAL MUNICIPAL SERVICES						
Taxation	$ 9,250	$ 8,719	$ 8,116	$ 7,870	$ 7,592	$ 7,419
Payment in lieu of taxes	171	171	173	163	161	160
Government grants	3,410	3,420	3,486	2,847	3,290	2,137
Fees and service charges	4,764	5,035	5,408	5,800	5,295	4,864
Equity income from Kitchener Power Corporation	868	809	786	849	785	806
Other	2,172	1,615	1,788	279	3,547	1,027
Total	$ 20,635	$ 19,769	$ 19,757	$ 17,808	$ 20,670	$ 16,413

THE CORPORATION OF THE TOWNSHIP OF WILMOT
SIX-YEAR FINANCIAL REVIEW (UNAUDITED)
(All dollar amounts are in (000's) of dollars, except per capita figures)

	2021	2020	2019	2018	2017	2016
NET LONG TERM LIABILITIES						
General municipal activities	$0	$0	$0	$0	$0	$0
- per capita	$0	$0	$0	$0	$0	$0
- percentage of taxable assessment	0.00%	0.00%	0.00%	0.00%	0.00%	0.00%
- Municipal enterprises	Nil	Nil	Nil	Nil	Nil	Nil
CHARGES FOR NET LONG TERM LIABILITIES						
General municipal activities	$0	$0	$0	$0	$0	$0
- per capita	$0	$0	$0	$0	$0	$0
- as a tax rate	$0.000	$0.000	$0.000	$0.000	$0.000	$0.000
ACCUMULATED SURPLUS						
- OPERATING FUND	$9,850	$8,279	$7,145	$5,459	$5,157	$1,677
- TANGIBLE CAPITAL ASSETS	$131,188	$131,811	$135,773	$137,684	$139,955	$143,567
- RESERVES AND RESERVE FUNDS	$6,296	$8,637	$8,337	$8,414	$8,304	$7,210
- KITCHENER POWER CORPORATION	$19,452	$18,924	$18,439	$17,965	$17,432	$16,972
DEFERRED REVENUES - obligatory reserve funds	-$3,307	-$1,880	-$1,374	-$828	-$947	$1,776

TOWNSHIP OF Wilmot

60 Snyder's Road West, Baden, ON N3A 1A1

Corporate Services Department
T: 519-634-8444
F:519-634-5522

Management Responsibility for Financial Reporting

For the Year ended December 31, 2021

The accompanying Financial Statements and all other information contained in this Annual Report are the responsibility of the management of The Corporation of the Township of Wilmot. The preparation of periodic financial statements involves the use of estimates and approximations because the precise determination of financial information frequently depends on future events. These Financial Statements have been prepared by management within the reasonable limits of materiality and within the framework of Canadian generally accepted accounting principles for governments established by the Public Sector Accounting Board of the Chartered Professional Accountants of Canada.

In carrying out its responsibilities, management maintains appropriate systems of internal and administrative controls designed to provide reasonable assurance that transactions are executed in accordance with proper authorization, that assets are properly accounted for and safeguarded, and that financial information produced is relevant and reliable.

Prior to their submission to Council, the Financial Statements are reviewed and approved by management. In addition, management meets periodically with the Township's external auditors to approve the scope and timing of their respective audits, to review their findings and to satisfy itself that their responsibilities have been properly discharged.

Graham Mathew Professional Corporation, Chartered Professional Accountants, as the Township's appointed external auditors, have audited the Financial Statements. The external auditors have full and free access to management and Council. The Independent Auditors' Report is dated April 25, 2022 and appears on the following pages. Their opinion is based upon an examination conducted in accordance with Canadian generally accepted auditing standards, performing such tests and other procedures as they consider necessary to obtain reasonable assurance that the Financial Statements are free of material misstatements and present fairly the financial position and results of the operations of the Township in accordance with Canadian public sector accounting standards.

Sharon Chambers,
Chief Administrative Officer

Patrick Kelly CPA, CMA
Director of Corporate Services / Treasurer

150 Pinebush Road, P.O. Box 880, Cambridge, Ontario N1R 5X9
p: 519.623.1870 f: 519.623.9490 w: gmpca.com

Graham Mathew

INDEPENDENT AUDITORS' REPORT

To the Members of Council, Inhabitants and Ratepayers of
The Corporation of the Township of Wilmot

Opinion

We have audited the accompanying financial statements of **The Corporation of the Township of Wilmot** (the Township), which comprise the statement of financial position as at December 31, 2021, and the statements of operations and accumulated surplus, change in net financial assets and cash flows for the year then ended, and notes to the financial statements, including a summary of significant accounting policies.

In our opinion, the accompanying financial statements present fairly, in all material respects, the financial position of the Township as at December 31, 2021, and its financial performance and its cash flows for the year then ended in accordance with Canadian public sector accounting standards.

Basis for Opinion

We conducted our audit in accordance with Canadian generally accepted auditing standards. Our responsibilities under those standards are further described in the Auditors' Responsibilities for the Audit of the Financial Statements section of our report. We are independent of the Township in accordance with the ethical requirements that are relevant to our audit of the financial statements in Canada, and we have fulfilled our other ethical responsibilities in accordance with these requirements. We believe that the audit evidence we have obtained is sufficient and appropriate to provide a basis for our opinion.

Responsibilities of Management and Those Charged with Governance for the Financial Statements

Management is responsible for the preparation and fair presentation of these financial statements in accordance with Canadian public sector accounting standards, and for such internal control as management determines is necessary to enable the preparation of financial statements that are free from material misstatement, whether due to fraud or error.

In preparing the financial statements, management is responsible for assessing the Township's ability to continue as a going concern, disclosing, as applicable, matters related to going concern and using the going concern basis of accounting unless Council either intends to liquidate the Township or to cease operations, or has no realistic alternative but to do so.

Those charged with governance are responsible for overseeing the Township's financial reporting process.

Auditors' Responsibilities for the Audit of the Financial Statements

Our objectives are to obtain reasonable assurance about whether the financial statements as a whole are free from material misstatement, whether due to fraud or error, and to issue an auditors' report that includes our opinion. Reasonable assurance is a high level of assurance, but is not a guarantee that an audit conducted in accordance with Canadian generally accepted auditing standards will always detect a material misstatement when it exists. Misstatements can arise from fraud or error and are considered material if, individually or in the aggregate, they could reasonably be expected to influence the economic decisions of users taken on the basis of these financial statements.

INDEPENDENT AUDITORS' REPORT (CONTINUED)

As part of an audit in accordance with Canadian generally accepted auditing standards, we exercise professional judgement and maintain professional skepticism throughout the audit. We also:

- Identify and assess the risks of material misstatement of the financial statements, whether due to fraud or error, design and perform audit procedures responsive to those risks, and obtain audit evidence that is sufficient and appropriate to provide a basis for our opinion. The risk of not detecting a material misstatement resulting from fraud is higher than for one resulting from error, as fraud may involve collusion, forgery, intentional omissions, misrepresentations, or the override of internal control.
- Obtain an understanding of internal control relevant to the audit in order to design audit procedures that are appropriate in the circumstances, but not for the purpose of expressing an opinion on the effectiveness of the Township's internal control.
- Evaluate the appropriateness of accounting policies used and the reasonableness of accounting estimates and related disclosures made by management.
- Conclude on the appropriateness of management's use of the going concern basis of accounting and, based on the audit evidence obtained, whether a material uncertainty exists related to events or conditions that may cast significant doubt on the Township's ability to continue as a going concern. If we conclude that a material uncertainty exists, we are required to draw attention in our auditors' report to the related disclosures in the financial statements or, if such disclosures are inadequate, to modify our opinion. Our conclusions are based on the audit evidence obtained up to the date of our auditors' report. However, future events or conditions may cause the Township to cease to continue as a going concern.
- Evaluate the overall presentation, structure and content of the financial statements, including the disclosures, and whether the financial statements represent the underlying transactions and events in a manner that achieves fair presentation.

We communicate with those charged with governance regarding, among other matters, the planned scope and timing of the audit and significant audit findings, including any significant deficiencies in internal control that we identify during our audit.

Graham Matthew Professional Corporation

Cambridge, Ontario
April 25, 2022

Chartered Professional Accountants, authorized to practise public accounting by the Chartered Professional Accountants of Ontario

THE CORPORATION OF THE TOWNSHIP OF WILMOT

Statement of Financial Position

December 31, 2021

	2021	2020
Financial Assets		
Cash	$ 15,617,820	$ 15,966,674
Taxes receivable	887,192	1,248,972
Accounts receivable	2,376,918	1,904,066
Investment in Kitchener Power Corp. (note 6)	19,451,978	18,924,265
	38,333,908	38,043,977
Liabilities		
Accounts payable and accrued liabilities	3,170,045	2,549,006
Deferred revenue (note 8)	3,053,549	1,699,240
Deferred revenue - obligatory reserve funds (note 9)	(3,307,171)	(1,880,316)
	2,916,423	2,367,930
Net Financial Assets	$ 35,417,485	$ 35,676,047
Non-Financial Assets		
Tangible capital assets (note 7)	131,187,709	131,811,185
Inventories and supplies	92,753	94,321
Prepaid expenses	87,674	70,450
	131,368,136	131,975,956
Accumulated Surplus (note 13)	$ 166,785,621	$ 167,652,003

See accompanying notes to financial statements.

Approved on behalf of Council

THE CORPORATION OF THE TOWNSHIP OF WILMOT

Statement of Operations and Accumulated Surplus

Year ended December 31, 2021

	2021 Budget (Note 12b)	2021 Actual	2020 Actual
Revenues			
Taxation	$ 9,167,350	$ 9,249,589	$ 8,718,941
Taxation from other governments	199,200	170,621	170,818
User fees and charges	5,383,899	4,348,561	4,534,625
Government transfer			
Canada	-	13,935	292,328
Ontario	1,223,525	1,397,368	1,864,913
Investment income	706,700	304,331	357,106
Interest and penalties on taxes	246,500	213,920	184,239
Other	305,630	206,907	324,803
	17,232,804	15,905,232	16,447,773
Expenses			
General government	2,925,365	3,556,921	3,361,210
Protection to persons and property	3,139,797	2,472,719	2,387,610
Transportation services	5,776,687	6,970,524	6,730,529
Environmental services	6,000,699	1,777,785	1,920,557
Health services	77,440	65,985	37,031
Recreation and cultural services	5,825,361	6,045,265	5,741,209
Planning and development	542,710	610,705	586,375
	24,288,058	21,499,904	20,764,521
Net expenses before other income (expense)	(7,055,254)	(5,594,672)	(4,316,748)
Other income (expense)			
Grants and transfers related to capital			
Deferred revenue earned	5,225,150	1,669,427	832,628
Grants and transfers - Canada	771,588	1,383,664	623,258
Grants and transfers - Ontario	1,043,516	614,765	639,265
Loss on disposal of tangible capital assets	-	(73,290)	(145,032)
Change in equity in Kitchener Power Corp.	-	867,613	809,023
Donations	-	197,134	475,100
Sale of publications, equipment	15,000	25,166	17,848
Interest earned on reserve funds	-	43,811	69,016
	7,055,254	4,728,290	3,321,106
Annual Surplus (Deficit)	-	(866,382)	(995,642)
Accumulated Surplus, beginning of the year		167,652,003	169,694,253
Asset Management Plan Adjustment (note 14)		-	(1,046,608)
Accumulated Surplus, end of the year		$ 166,785,621	$ 167,652,003

See accompanying notes to financial statements.

THE CORPORATION OF THE TOWNSHIP OF WILMOT

Statement of Change in Net Financial Assets

Year ended December 31, 2021

	2021 Budget (Note 12b)	2021 Actual	2020 Actual
Annual Surplus (Deficit)	$ -	$ (866,382)	$ (995,642)
Amortization of tangible capital assets	-	6,130,853	6,001,204
Acquisition of tangible capital assets	(8,874,450)	(5,580,667)	(3,230,714)
Loss on disposal of tangible capital assets	-	73,290	145,032
Change in inventories and supplies	-	1,568	63,830
Change in prepaid expenses	-	(17,224)	(13,880)
Increase (decrease) In Net Financial Assets	(8,874,450)	(258,562)	1,969,830
Net Financial Assets, beginning of year	35,676,047	35,676,047	33,706,217
Net Financial Assets, end of year	$ 26,801,597	$ 35,417,485	$ 35,676,047

See accompanying notes to financial statements.

THE CORPORATION OF THE TOWNSHIP OF WILMOT

Statement of Cash Flows

Year ended December 31, 2021

	2021	2020
Operating activities		
Annual Surplus (Deficit)	$ (866,382)	$ (995,642)
Sources (uses)		
Taxes receivable	361,780	(181,456)
Accounts receivable	(472,852)	599,974
Accounts payable and accrued liabilities	621,039	511,524
Deferred revenue	(72,546)	(1,119,957)
Inventories and supplies	1,568	63,830
Prepaid expenses	(17,224)	(13,880)
	(444,617)	(1,135,607)
Non-cash charges to operations		
Amortization	6,130,853	6,001,204
Loss on sale of tangible capital assets	73,290	145,032
	5,759,526	5,010,629
Capital activities		
Acquisition of tangible capital assets	(5,580,667)	(3,230,714)
Investing activities		
Net increase in investments	(527,713)	(484,923)
Net increase (decrease) in cash	(348,854)	1,294,992
Cash, beginning of year	15,966,674	14,671,682
Cash, end of year	$ 15,617,820	$ 15,966,674

THE CORPORATION OF THE TOWNSHIP OF WILMOT

Notes to Financial Statements

Year ended December 31, 2021

---

1. Municipal Status

The Corporation of The Township of Wilmot was created on January 1, 1973 when the municipalities of Wilmot and New Hamburg were amalgamated into a single legal entity under the Wilmot name. The Township operates as a lower tier government in the Province of Ontario, Canada. Wilmot provides municipal services such as fire protection, public works, water/sanitary distribution, urban/rural planning, recreation and cultural services, and other general government services. The Township owns 7.75% of Kitchener Power Corporation and its affiliates.

2. Summary of Significant Accounting policies:

The financial statements of the Municipality are the representation of management, prepared in accordance with local government accounting standards established by the Public Sector Accounting Board (PSAB) of the Chartered Professional Accountants of Canada.

The following is a summary of the significant accounting policies followed in the preparation of these financial statements:

(a) Basis of Presentation:

(i) Financial Statements:

These statements reflect the financial assets, liabilities, operating revenues and expenses, reserve funds and reserves, changes in investment in tangible capital assets and cash flows and include the activities of all governmental functions controlled and exercised by the Township Council.

All interfund transfers have been eliminated.

(ii) Government Business Enterprises:

The government business enterprise, Kitchener Power Corp., is accounted for on the modified equity basis which reflects the Township's investment in the enterprise and its share of net income (loss) since acquisition. Under the modified equity basis, the enterprise's accounting principles are not adjusted to conform to those of the Township, and inter-organizational transactions and balances are not eliminated.

(iii) Accounting for Region and School Board Transactions:

The taxation, other revenues, expenditures, assets and liabilities with respect to the operations of the School Boards and the Regional Municipality of Waterloo, are not reflected in these financial statements.

(iv) Trust Funds:

Trust funds and their related operations administered by the Municipality are not consolidated herein but are reported separately on the "Trust Funds Statement of Financial Position and Statement of Continuity" (see also Note 4).

THE CORPORATION OF THE TOWNSHIP OF WILMOT

Notes to Financial Statements, continued

Year ended December 31, 2021

2. Summary of Significant Accounting policies (continued):

(b) Non-Financial Assets

Non-financial assets are not normally available to discharge existing liabilities and are held for use in the provision of services. They have useful lives extending beyond the current year and are not intended for sale in the ordinary course of operations. The change in non-financial assets during the year, together with the annual surplus (deficit) of revenues over expenses, provides the change in net financial assets for the year.

(i) Tangible Capital Assets

Tangible capital assets are recorded at cost which includes all amounts that are directly attributable to acquisition, construction, development or betterment of the asset. The cost of the tangible capital assets is amortized on a straight-line basis over their estimated useful lives as follows:

Land	not amortized
Land Improvements	15 years
Buildings	40 years
Machinery and Equipment	10 years
Technological Equipment	5 years
Vehicles	10 years
Roads (tar & chip, gravel, paved)	25 years
Bridges	60 years
Water and Wastewater	75 years

Work in progress is not amortized until the asset is available for productive use.

(ii) Contributions of Tangible Capital Assets (Donated)

Tangible capital assets received as contributions are recorded at their fair value at the date of receipt and also are recorded as revenue.

(iii) Interest Capitalization

The Township does not capitalize interest costs associated with the acquisition or construction of a tangible capital asset.

(iv) Works of art and cultural and historic assets

These assets are not recorded in these financial statements.

(v) Inventories and Prepaid Expenses

Inventories held for consumption are recorded at the lower of cost and replacement cost.

Prepaid expenses relate to expenditures incurred in the current period which relate to and will be expensed in a future fiscal period.

THE CORPORATION OF THE TOWNSHIP OF WILMOT

Notes to Financial Statements, continued

Year ended December 31, 2021

---

2. Summary of Significant Accounting policies (continued):

(c) Revenue Recognition

Revenues are recognized in the period in which the transactions or events occurred that gave rise to the revenues. All revenues are recorded on an accrual basis, except when the accruals cannot be determined with a reasonable degree of certainty or when their estimation is impracticable.

Government transfers are recognized as revenues when the transfer is authorized and any eligibility criteria are met, except to the extent that transfer stipulations give rise to an obligation that meets the definition of a liability. Transfers are recognized as deferred revenue when transfer stipulations give rise to a liability. Transfer revenue is recognized in the statement of operations as the stipulation liabilities are settled.

Government transfers, contributions and other amounts are received from third parties pursuant to legislation, regulation or agreement and may only be used in the conduct of certain programs, in the completion of specific work or the purchase of tangible capital assets. In addition, certain user charges and fees are collected for which the related services have yet to be performed. Revenue is recognized in the period when the related expenses are incurred, services performed or the tangible assets are acquired.

Tax revenue is recognized when it is authorized and in the period for which the tax is levied.

(d) Use of estimates

The preparation of financial statements requires management to make estimates and assumptions that affect the reported amounts of assets and liabilities, the disclosure of contingent assets and liabilities at the date of the financial statements and the reported amounts of revenues and expenses during the year. These estimates and assumptions, including taxation assessment appeals, legal claims provisions, the valuation of tangible capital assets and their related useful lives and amortization, are based on management's best information and judgement and may differ significantly from future actual results.

THE CORPORATION OF THE TOWNSHIP OF WILMOT

Notes to Financial Statements, continued

Year ended December 31, 2021

3. Operations of School Boards and the Region of Waterloo:

Further to note 2(a)(iii), the taxation, other revenues, and requisitions for the School Boards and the Region of Waterloo are comprised of the following:

	School Boards	Region
Taxation and user charges	$ 6,906,602	$ 18,750,569
Share of payments in lieu of taxes	114,471	118,523
	7,021,073	18,869,092
Payment	7,021,073	18,869,092
Overlevies (underlevies) end of year	$ -	$ -

4. Trust Funds:

Further to note 2(a)(iv), trust fund assets administered by the Township amounting to $806,525 (2020 - $710,246) have not been included in the Statement of Financial Position nor have their operations been included in the Statement of Operations and Accumulated Surplus.

5. Ontario Municipal Employees' Retirement Fund:

The Township makes matching contributions on behalf of its staff to the Ontario Municipal Employees' Retirement Fund (OMERS), which is a multi-employer plan. The plan is a defined benefit plan which specifies the amount of the retirement benefit to be received by the employees based on the length of service, age and rates of pay.

Employee contributions in 2021 were at rates ranging from 9.0% to 14.6% based on member earnings and were matched by the Township on a dollar for dollar basis. The amount contributed to OMERS by the Township for 2021 was $541,787 (2020 - $521,765) for current service and is included as an expense on the statement of operations and accumulated surplus.

The OMERS pension plan has a deficit. The last available report for the OMERS plan was on December 31, 2021. At that time the plan reported a $3.1 billion actuarial deficit (2020 - $3.2 billion), based on actuarial liabilities of $120.8 billion (2020 - $113.1 billion) and actuarial assets of $117.7 billion (2020 - $109.9 billion). If actuarial surpluses are not available to offset the existing deficit and subsidize future contributions, increases in contributions will be required in the future. There were no changes to contribution rates or benefits for 2021.

The Township does not participate in any past service provisions of the OMERS agreement.

THE CORPORATION OF THE TOWNSHIP OF WILMOT

Notes to Financial Statements, continued

Year ended December 31, 2021

6. Investment in Kitchener Power Corp.:

Under the provincial government's Electricity Competition Act (Bill 35), Kitchener Power Corp., a holding company, along with its wholly-owned affiliates, Kitchener-Wilmot Hydro Inc., and Kitchener Energy Services Inc. was incorporated on July 1, 2004.

The Township holds 7.75% of the common shares of Kitchener Power Corp. and a 7.75% share in long-term notes payable by subsidiaries and investees of Kitchener Power Corp.

Mergers of the holding companies, Kitchener Power Corp. and Waterloo North Hydro Holding Corporation and the local distribution companies, Kitchener-Wilmot Hydro Inc. and Waterloo North Hydro Inc. were proposed in 2021. The proposals have been agreed to by the Township of Wilmot and City of Kitchener Councils. A Mergers, Amalgamations, Acquisitions and Divestitures (MAADs) application was filed on February 4, 2022 seeking permission from the Ontario Energy Board ("OEB") to proceed with the proposed merger.

The investment in Kitchener Power Corp. consists of the following elements:

		2021		2020
Kitchener Power Corp. common shares, initial valuation	$	5,113,962	$	5,113,962
Kitchener-Wilmot Hydro Inc. long-term notes receivable		5,964,566		5,964,566
		11,078,528		11,078,528
Accumulated equity increase, beginning of year		7,845,737		7,360,814
		18,924,265		18,439,342
Share of net income for year		867,613		809,023
Dividends received in year		(339,900)		(324,100)
Cost of investment	$	19,451,978	$	18,924,265

The Kitchener-Wilmot Hydro Inc. notes bear interest at the annual rate of 3.23%, and are unsecured.

THE CORPORATION OF THE TOWNSHIP OF WILMOT

Notes to Financial Statements, continued

Year ended December 31, 2021

6. Investment in Kitchener Power Corp. (continued):

The following table provides condensed financial information in respect of Kitchener Power Corp.:

	2021	2020
	(in thousands)	(in thousands)
Current assets	$ 46,263	$ 56,044
Long-term assets	317,220	296,370
Total assets	$ 363,483	$ 352,414
Current liabilities	42,578	47,790
Long-term liabilities	142,332	132,907
Total liabilities	184,910	180,697
Net assets	$ 178,573	$ 171,717

	2021	2020
	(in thousands)	(in thousands)
Results of operations:		
Revenues	$ 256,287	$ 292,372
Operating expenses	(245,092)	(281,933)
Net income	$ 11,195	$ 10,439
Township's share of net income - 7.75%	$ 868	$ 809

THE CORPORATION OF THE TOWNSHIP OF WILMOT

Notes to Financial Statements, continued

Year ended December 31, 2021

7. Tangible Capital Assets:

There were no tangible capital assets contributed to the Township in 2021. Donated land and other tangible capital assets are capitalized at their fair market value at the time of receipt and included in income as “donated tangible capital assets”.

Amortization expense for the year amounts to $6,130,853 ($6,001,204 in 2020).

2021	Land	Land Improvements	Buildings	Machinery & Equipment	Infrastructure	Vehicles	Total
Cost							
Balance, beginning of year	$ 10,315,370	$ 4,866,368	$ 34,706,998	$ 5,254,635	$ 174,076,708	$ 6,625,336	$ 235,845,415
Additions	-	1,178,707	129,655	203,044	508,559	130,412	2,150,377
Disposals	-	(14,664)	(34,551)	-	(123,412)	-	(172,627)
Cost, end of year	**10,315,370**	**6,030,411**	**34,802,102**	**5,457,679**	**174,461,855**	**6,755,748**	**237,823,165**
Accumulated amortization							
Balance, beginning of year	-	2,597,593	12,917,885	2,856,447	82,828,999	4,742,530	105,943,454
Disposals	-	(14,664)	(13,505)	-	(71,168)	-	(99,337)
Amortization expense	-	318,393	854,940	496,448	4,124,041	337,031	6,130,853
Accumulated amortization, end of year	**-**	**2,901,323**	**13,759,320**	**3,352,895**	**86,881,872**	**5,079,561**	**111,974,970**
Work in Progress	**-**	**-**	**-**	**-**	**-**	**-**	**5,339,514**
Net Book Value, end of year	**$ 10,315,370**	**$ 3,129,088**	**$ 21,042,783**	**$ 2,104,784**	**$ 87,579,983**	**$ 1,676,187**	**$ 131,187,709**

2020	Land	Land Improvements	Buildings	Machinery & Equipment	Infrastructure	Vehicles	Total
Cost							
Balance, beginning of year	$ 10,315,370	$ 4,195,211	$ 34,247,904	$ 4,108,487	$ 173,765,018	$ 6,441,997	$ 233,073,987
Additions	-	690,570	497,808	1,154,044	1,307,520	461,889	4,111,831
Disposals	-	(19,413)	(38,714)	(7,896)	(995,830)	(278,550)	(1,340,403)
Cost, end of year	**10,315,370**	**4,866,368**	**34,706,998**	**5,254,635**	**174,076,708**	**6,625,336**	**235,845,415**
Accumulated amortization							
Balance, beginning of year (note 13)	-	2,354,290	12,090,355	2,472,206	79,545,838	4,674,930	101,137,619
Disposals	-	(19,413)	(17,825)	(7,896)	(871,686)	(278,549)	(1,195,369)
Amortization expense	-	262,716	845,355	392,137	4,154,847	346,149	6,001,204
Accumulated amortization, end of year	**-**	**2,597,593**	**12,917,885**	**2,856,447**	**82,828,999**	**4,742,530**	**105,943,454**
Work in Progress	**-**	**-**	**-**	**-**	**-**	**-**	**1,909,224**
Net Book Value, end of year	**$ 10,315,370**	**$ 2,268,775**	**$ 21,789,113**	**$ 2,398,188**	**$ 91,247,709**	**$ 1,882,806**	**$ 131,811,185**

THE CORPORATION OF THE TOWNSHIP OF WILMOT

Notes to Financial Statements, continued

Year ended December 31, 2021

8. Deferred revenue:

(a) The balances in deferred revenues on the statement of financial position are summarized by service area as follows:

		2021		2020
Development Services	$	1,622,257	$	832,320
Fire Services		11,910		-
Parks, Facilities and Recreation Services		616,916		273,793
Public Works and Engineering Services		280,282		291,743
Other		522,184		301,384
	$	3,053,549	$	1,699,240

(b) Deferred revenues include funding support from senior levels of government resulting from the COVID-19 pandemic $467,222 (2020 – $205,316).

9. Deferred revenue - obligatory reserve funds:

A requirement of PSAB is that obligatory reserve funds be reported as deferred revenue. This requirement is in place as provincial legislation restricts how these funds may be used and under certain circumstances these funds may possibly be refunded.

(a) The balances in the obligatory reserve funds of the Township are summarized as follows:

		2021		2020
Recreational parkland (The Planning Act)	$	1,599,806	$	1,544,106
Development charges and sub-dividers contributions		(3,727,430)		(2,532,239)
Federal Gas Tax		104,692		103,812
Building Department (Bill 124)		(1,284,239)		(995,995)
	$	(3,307,171)	$	(1,880,316)

THE CORPORATION OF THE TOWNSHIP OF WILMOT

Notes to Financial Statements, continued

Year ended December 31, 2021

9. Deferred revenue - obligatory reserve funds (continued):

(b) Continuity schedule:

	2021	2020
Revenue		
Development charges and user fees	$ 261,075	$ 342,384
Federal Gas Tax funding	1,277,978	623,258
Investment income	(16,933)	(15,650)
	1,522,120	949,992
Deferred revenue recognized	(2,948,975)	(1,455,885)
Change in deferred revenue	(1,426,855)	(505,893)
Deferred revenue, beginning of year	(1,880,316)	(1,374,423)
Deferred revenue, end of year	$ (3,307,171)	$ (1,880,316)

10. Net long-term liabilities:

(a) The balance of net long-term liabilities reported on the statement of financial position is made up of the following:

	2021	2020
The municipality has assumed responsibility for the payment of principal and interest charges on certain long-term liabilities issued by the Region of Waterloo. At the end of the year, the outstanding principal amount of this liability is	$ 686,968	$ 806,064
Of the long-term liabilities shown above, the responsibility for payment of principal and interest charges that has been assumed by individuals amounts to	(686,968)	(806,064)
Net long-term liabilities at end of year	$ nil	$ nil

THE CORPORATION OF THE TOWNSHIP OF WILMOT

Notes to Financial Statements, continued

Year ended December 31, 2021

10. Net long-term liabilities (continued):

(b) Of the long-term liabilities reported in (a) of this note, future principal payments are summarized as follows:

	2022 to 2026	2027 and thereafter	Total
From benefiting landowners	$ 686,968	$ -	$ 686,968

(c) The Township is contingently liable for the long-term liability with respect to tile drainage loans and the water system indebtedness. The total amount of this contingent liability outstanding at December 31, 2021 is $686,968 (2020 - $806,064).

11. Self Insurance Coverage:

The Township has an agreement with members of the Waterloo Region Municipalities Insurance Pool to purchase property damage and public liability insurance on a group basis and share a retained level of risk. The members pay an annual levy to fund insurance coverage, losses, and contribute to a surplus. The pool has purchased insurance to fund losses above a pre-determined deductible and any losses above a pre-determined total in any year.

The Township is self-insured for public liability claims up to $10,000 (2020 - $10,000) for any individual claim and $10,000 (2020 - $10,000) for any number of claims arising out of a single occurrence. Outside coverage is in place for claims in excess of these limits.

During the year, claims amounting to $49,343 (2020 – $70,776) were settled and insurance premiums of $219,514 (2020 - $203,837) were paid. Both amounts are reported as an expenditure on the Statement of Operations and Accumulated Surplus.

The Township is, from time to time, involved in legal suits of varying dollar amounts for which no provision for possible liability has been recorded in these financial statements. In the event the Township is found liable, any amounts not recoverable from Township's insurers will be adjusted against future revenues.

THE CORPORATION OF THE TOWNSHIP OF WILMOT

Notes to Financial Statements, continued

Year ended December 31, 2021

12. Other explanatory notes:

(a) Expenditures by object

The following is a summary of the operating expenditures on the statement of financial activities by the object of expenditure:

	2021	2020
Salaries, wages and employee benefits	$ 8,885,725	$ 8,130,754
Materials	5,871,292	5,983,767
Amortization	6,130,853	6,001,204
Contracted services	553,788	595,820
External transfers	58,246	52,976
	$ 21,499,904	20,764,521

THE CORPORATION OF THE TOWNSHIP OF WILMOT

Notes to Financial Statements, continued

Year ended December 31, 2021

12. Other explanatory notes (continued):

(b) Budget Figures

Budget figures reported on the Statement of Operations and Accumulated Surplus are based on the 2021 operating and capital budgets, as approved by Council. Approved budget figures have been reclassified and adjusted for the purposes of these financial statements to comply with Public Sector Accounting Board (PSAB) reporting requirements. The Township has provided the following reconciliation of the PSAB reported surplus to the approved Council budget.

	2021	2020
Annual Surplus (Deficit) under PSAB	$ (866,382)	$ (995,642)
Less:		
Grants and transfer related to capital	2,337,150	2,762,352
Deferred Revenue, net change	(2,341,515)	300,454
Contribution from Developers	1,390,867	754,254
Tangible capital assets additions	5,580,667	3,230,714
Increase in Government Business Enterprises	527,713	484,923
	7,494,882	7,532,697
Add:		
Amortization	6,130,853	6,001,204
Capital expenses	2,157,121	2,382,103
Loss on disposal of capital assets	73,290	145,032
	8,361,264	8,528,339
Budget Surplus, Council approved	$ -	$ -

THE CORPORATION OF THE TOWNSHIP OF WILMOT

Notes to Financial Statements, continued

Year ended December 31, 2021

13. Accumulated surplus:

	2021	2020
Reserve and Reserve Funds		
Baden West Noise Wall	73,683	73,149
Elections	56,222	35,397
Hamilton Road Noise Wall	145,773	144,717
Heritage Lighting	5,927	5,884
Infrastructure Reserve - Cemetery	(60,538)	(66,108)
Infrastructure Reserve - Equipment	211,675	480,620
Infrastructure Reserve - Facilities	420,667	688,919
Infrastructure Reserve - Sanitary Sewers	1,341,032	2,289,435
Infrastructure Reserve - Street Lighting	(41,402)	(100,900)
Infrastructure Reserve - Transportation	347,506	609,928
Infrastructure Reserve - Water	2,436,130	3,373,134
Infrastructure Reserve - Water Meter	682,254	559,916
Municipal Accomodation Tax	2,774	1,973
Self-Insurance	20,146	20,000
Winter Maintenance	151,775	19,073
Working Funds	502,139	502,139
Total Reserves and Reserve Funds	6,295,763	8,637,278
Surplus		
Invested in tangible capital assets	131,187,709	131,811,185
Operating Fund	29,302,149	27,203,540
Total Surplus	160,489,858	159,014,725
Accumulated Surplus	166,785,621	$ 167,652,003

THE CORPORATION OF THE TOWNSHIP OF WILMOT

Notes to Financial Statements, continued

Year ended December 31, 2021

14. Asset Management Plan Adjustment:

In accordance with the Ministry of Infrastructure "Building Together" guide, the Township completed an Asset Management Plan (AMP) which was a first step in establishing an overall infrastructure strategy.

As a result of refinements to AMP data, certain tangible capital assets are revalued to match AMP records, resulting in an increase/decrease in tangible capital assets as follows:

	2021	2020
Cost	$ -	$ (3,210,892)
Accumulated amortization	-	(2,164,284)
	$ -	$ (1,046,608)

The impact of this adjustment in 2021 was a decrease in accumulated surplus of $0 (2020 - $1,046,608).

15. Segmented Information:

Segmented information has been identified based upon lines of service provided by the Township. Township services are provided by departments and their activities are reported by functional area in the body of the financial statements. Certain lines of service have been separately disclosed in the segmented information, along with the services they provide.

For each reported segment, revenues and expenses represent both amounts that are directly attributable to the segment and amounts that are allocated on a reasonable basis.

The accounting policies used in these segments are consistent with those followed in the preparation of the financial statements as disclosed in note 2.

(i) General Government:

The Township is responsible for the delivery of administrative services, including Council, Clerks, Finance, Information Technology, By-Law Enforcement and Human Resources.

(ii) Protection Services – Fire:

The Township is responsible for the delivery of Fire and Rescue services.

(iii) Transportation Services:

The Township is responsible for the delivery of municipal public works services related to the maintenance of roadway systems.

THE CORPORATION OF THE TOWNSHIP OF WILMOT

Notes to Financial Statements, continued

Year ended December 31, 2021

---

15. Segmented Information (continued):

(iv) Environmental Services:

The Township is responsible for environmental programs such as the engineering and operation of water distribution and wastewater collection systems.

(v) Health Services:

The Township is responsible for the care, maintenance and operations of the Riverside Cemetery.

(vi) Recreation and Cultural Services:

The Township is responsible for operation and rental of space in facilities such as Wilmot Recreation Complex, New Hamburg Arena/CC, Community Parks and Castle Kilbride.

(vii) Development Services:

The Township is responsible for development services which includes planning services, economic development and building permit administration.

THE CORPORATION OF THE TOWNSHIP OF WILMOT

Notes to Financial Statements, continued

Year ended December 31, 2021

15. Segmented Information (continued):

Year Ended December 31, 2021	General Government	Protection Services	Transportation Services	Environmental Services	Health Services	Recreation & Culture	Development Services	Total
Revenue								
Taxation	$ 1,626,904	$ 921,287	$ 3,269,166	$ -	$ -	$ 3,007,512	$ 595,341	9,420,210
User fees and charges	96,972	14,072	116,885	2,721,658	78,955	711,826	608,193	4,348,561
Government Transfers								
Canada	3,600	-	1,355,208	-	-	38,791	-	1,397,599
Ontario	300,764	111,899	1,150,875	-	-	353,559	95,036	2,012,133
Investment income	158,551	85,132	381,777	221,169	4,943	275,059	89,124	1,215,755
Interest and penalty on taxes	213,920	-	-	-	-	-	-	213,920
Other	290,182	312,455	205,521	810,810	-	281,495	124,881	2,025,344
Total Revenue	**2,690,893**	**1,444,845**	**6,479,432**	**3,753,637**	**83,898**	**4,668,242**	**1,512,575**	**20,633,522**
Expenses								
Salaries, Wages, Benefits	1,978,837	972,615	1,488,927	574,342	19,190	3,001,966	849,848	8,885,725
Materials and Services	1,625,897	418,731	1,736,824	486,623	41,460	1,887,993	227,552	6,425,080
Debenture Debt Interest	-	-	-	-	-	-	-	-
Other	-	-	-	-	-	-	-	-
Grants to Organizations	-	-	-	-	-	58,246	-	58,246
Amortization	122,499	439,675	3,744,773	716,820	5,335	1,097,060	4,691	6,130,853
Internal Transfers	(473,290)	11,630	(431,920)	771,510	43,420	(29,990)	108,640	-
Total Expenditures	**3,253,943**	**1,842,651**	**6,538,604**	**2,549,295**	**109,405**	**6,015,275**	**1,190,731**	**21,499,904**
Annual surplus (deficit)	**$ (563,050)**	**$ (397,806)**	**$ (59,172)**	**$ 1,204,342**	**$ (25,507)**	**$ (1,347,033)**	**$ 321,844**	**$ (866,382)**

Year Ended December 31, 2020	General Government	Protection Services	Transportation Services	Environmental Services	Health Services	Recreation & Culture	Development Services	Total
Revenue								
Taxation	$ 1,520,991	$ 887,142	$ 3,126,767	$ -	$ -	$ 2,811,438	$ 543,422	8,889,759
User fees and charges	100,487	20,937	107,160	2,778,380	76,632	772,049	711,160	4,566,805
Government Transfers								
Canada	3,600	-	623,258	-	-	11,644	-	638,502
Ontario	931,630	111,278	1,211,195	54,500	-	372,918	99,741	2,781,262
Investment income	208,924	74,443	336,065	188,792	5,107	323,798	98,016	1,235,145
Interest and penalty on taxes	184,239	-	-	-	-	-	-	184,239
Other	284,046	110,923	21,049	-	-	932,594	124,555	1,473,167
Total Revenue	**3,233,917**	**1,204,723**	**5,425,494**	**3,021,672**	**81,739**	**5,224,441**	**1,576,894**	**19,768,879**
Expenses								
Salaries, Wages, Benefits	1,800,098	905,581	1,288,581	520,540	16,018	2,831,567	768,369	8,130,754
Materials and Services	1,578,739	554,673	1,990,465	364,285	15,678	1,822,584	253,163	6,579,587
Debenture Debt Interest	-	-	-	-	-	-	-	-
Other	-	-	-	-	-	-	-	-
Grants to Organizations	-	-	-	-	-	52,976	-	52,976
Amortization	138,949	330,932	3,451,483	1,035,732	5,335	1,034,082	4,691	6,001,204
Internal Transfers	(426,880)	11,633	(376,420)	701,977	39,490	(27,900)	78,100	-
Total Expenditures	**3,090,906**	**1,802,819**	**6,354,109**	**2,622,534**	**76,521**	**5,713,309**	**1,104,323**	**20,764,521**
Annual surplus (deficit)	**$ 143,011**	**$ (598,096)**	**$ (928,615)**	**$ 399,138**	**$ 5,218**	**$ (488,868)**	**$ 472,571**	**$ (995,642)**

16. Uncertainty Regarding COVID-19:

As the COVID-19 pandemic continues to impact the economy, it could result in a significant negative impact on various aspects of the Township's operations. As of the time of authorization of these financial statements, it is not possible to estimate the length and severity of these developments and their impact on the financial results and operations of the Township.

Trust Funds Financial Statements of

THE CORPORATION OF THE TOWNSHIP OF WILMOT

Year ended December 31, 2021

150 Pinebush Road, P.O. Box 880, Cambridge, Ontario N1R 5X9
p: 519.623.1870 f: 519.623.9490 w: gmpca.com

Graham Mathew

INDEPENDENT AUDITORS' REPORT

To the Members of Council, Inhabitants and Ratepayers of
The Corporation of the Township of Wilmot

Opinion

We have audited the accompanying financial statements of the **Trust Funds of The Corporation of the Township of Wilmot** (the Township), which comprise the statement of financial position as at December 31, 2021, and the statement of continuity for the year then ended, and notes to the financial statements, including a summary of significant accounting policies.

In our opinion, the accompanying financial statements present fairly, in all material respects, the financial position of the trust funds of the Township as at December 31, 2021, and its financial performance for the year then ended in accordance with Canadian public sector accounting standards.

Basis for Opinion

We conducted our audit in accordance with Canadian generally accepted auditing standards. Our responsibilities under those standards are further described in the Auditors' Responsibilities for the Audit of the Financial Statements section of our report. We are independent of the Township in accordance with the ethical requirements that are relevant to our audit of the financial statements in Canada, and we have fulfilled our other ethical responsibilities in accordance with these requirements. We believe that the audit evidence we have obtained is sufficient and appropriate to provide a basis for our opinion.

Responsibilities of Management and Those Charged with Governance for the Financial Statements

Management is responsible for the preparation and fair presentation of these financial statements in accordance with Canadian public sector accounting standards, and for such internal control as management determines is necessary to enable the preparation of financial statements that are free from material misstatement, whether due to fraud or error.

In preparing the financial statements, management is responsible for assessing the ability of the trust funds of the Township to continue as a going concern, disclosing, as applicable, matters related to going concern and using the going concern basis of accounting unless Council either intends to liquidate the trust funds of the Township or to cease operations, or has no realistic alternative but to do so.

Those charged with governance are responsible for overseeing the financial reporting process of the trust funds of the Township.

Auditors' Responsibilities for the Audit of the Financial Statements

Our objectives are to obtain reasonable assurance about whether the financial statements as a whole are free from material misstatement, whether due to fraud or error, and to issue an auditors' report that includes our opinion. Reasonable assurance is a high level of assurance, but is not a guarantee that an audit conducted in accordance with Canadian generally accepted auditing standards will always detect a material misstatement when it exists. Misstatements can arise from fraud or error and are considered material if, individually or in the aggregate, they could reasonably be expected to influence the economic decisions of users taken on the basis of these financial statements.

INDEPENDENT AUDITORS' REPORT (CONTINUED)

As part of an audit in accordance with Canadian generally accepted auditing standards, we exercise professional judgement and maintain professional skepticism throughout the audit. We also:

- Identify and assess the risks of material misstatement of the financial statements, whether due to fraud or error, design and perform audit procedures responsive to those risks, and obtain audit evidence that is sufficient and appropriate to provide a basis for our opinion. The risk of not detecting a material misstatement resulting from fraud is higher than for one resulting from error, as fraud may involve collusion, forgery, intentional omissions, misrepresentations, or the override of internal control.
- Obtain an understanding of internal control relevant to the audit in order to design audit procedures that are appropriate in the circumstances, but not for the purpose of expressing an opinion on the effectiveness of the Township's internal control.
- Evaluate the appropriateness of accounting policies used and the reasonableness of accounting estimates and related disclosures made by management.
- Conclude on the appropriateness of management's use of the going concern basis of accounting and, based on the audit evidence obtained, whether a material uncertainty exists related to events or conditions that may cast significant doubt on the trust funds of the Township's ability to continue as a going concern. If we conclude that a material uncertainty exists, we are required to draw attention in our auditors' report to the related disclosures in the financial statements or, if such disclosures are inadequate, to modify our opinion. Our conclusions are based on the audit evidence obtained up to the date of our auditors' report. However, future events or conditions may cause the trust funds of the Township to cease to continue as a going concern.
- Evaluate the overall presentation, structure and content of the financial statements, including the disclosures, and whether the financial statements represent the underlying transactions and events in a manner that achieves fair presentation.

We communicate with those charged with governance regarding, among other matters, the planned scope and timing of the audit and significant audit findings, including any significant deficiencies in internal control that we identify during our audit.

Graham Mathew Professional Corporation

Cambridge, Ontario
April 25, 2022

Chartered Professional Accountants, authorized to practise public accounting by the Chartered Professional Accountants of Ontario

THE CORPORATION OF THE TOWNSHIP OF WILMOT

Trust Funds Statement of Continuity

Year ended December 31, 2021

	Riverside Cemetery	Castle Kilbride	WRC Youth Ctr	WRC Adult Ctr	Baden Comm Ctr	Financial Assistance	Fairmont Cemetery	Festival of Lights	Wilmot Fire Service	Trail System	Wilmot Splash Pad	TOTALS 2021	2020
Opening Balance	382,295	40,192	24,174	17,852	19,783	9,611	36,025	2,355	4,464	89,260	84,235	**710,246**	1,154,718
Receipts:													
Donations		1,356	800						2,500			**4,656**	5,704
Care & Maintenance	20,381						100					**20,481**	15,061
Transfer from Revenue Fund						510						**510**	1,045
Investment Income	2,597	269	164	119	132	65	241	16	34	596	562	**4,795**	10,632
	22,978	1,625	964	119	132	575	341	16	2,534	596	562	**30,442**	32,442
Expenditures:													
Transfer to Revenue Fund	2,597		-									**2,597**	30,605
Transfer from Capital Fund										(69,203)		**(69,203)**	445,000
Transfer to Others						380	389					**769**	1,309
	2,597	-	-	-	-	380	389	-	-	(69,203)	-	**(65,837)**	476,914
Ending Balance	402,676	41,817	25,138	17,971	19,915	9,806	35,977	2,371	6,998	159,059	84,797	**806,525**	710,246

THE CORPORATION OF THE TOWNSHIP OF WILMOT

Trust Funds Statement of Financial Position

December 31, 2021

	Riverside Cemetery	Castle Kilbride	WRC Youth Ctr	WRC Adult Ctr	Baden Comm Ctr	Financial Assistance	Fairmont Cemetery	Festival of Lights	Wilmot Fire Service	Trail System	Wilmot Splash Pad	TOTALS 2021	2020
Assets													
Cash	402,676	41,817	25,138	17,971	19,915	9,806	35,977	2,371	6,998	159,059	84,797	**806,525**	$ 710,246
	402,676	41,817	25,138	17,971	19,915	9,806	35,977	2,371	6,998	159,059	84,797	**$ 806,525**	$ 710,246
Liabilities and Fund Balances													
Fund Balance	402,676	41,817	25,138	17,971	19,915	9,806	35,977	2,371	6,998	159,059	84,797	**806,525**	710,246
	402,676	41,817	25,138	17,971	19,915	9,806	35,977	2,371	6,998	159,059	84,797	**$ 806,525**	$ 710,246

See accompanying notes to financial statements

THE CORPORATION OF THE TOWNSHIP OF WILMOT

Notes to Trust Funds Financial Statements

Year ended December 31, 2021

---

1. Accounting Policies

The financial statements of The Trust Funds of the Corporation of the Township of Wilmot are the representation of management prepared in accordance with Canadian generally accepted accounting principles as recommended by the Public Sector Accounting Board of the Chartered Professional Accountants of Canada.

(a) **Basis of Accounting**

Donation receipts are reported on the cash basis of accounting. Investment income is reported on the accrual basis of accounting.

Expenditures, including transfers to the operating fund, are reported on the cash basis of accounting.

(b) **Use of Estimates**

The preparation of financial statements requires management to make estimates and assumptions that affect the reported amounts of assets and liabilities, the disclosure of contingent assets and liabilities at the date of the financial statements and the reported amounts of revenues and expenses during the year. These estimates and assumptions are based on management's best information and judgement and may differ significantly from future actual results.

CORPORATE SERVICES
Staff Report

REPORT NO:	COR 2022-018
TO:	Council
SUBMITTED BY:	Patrick Kelly CPA, CMA, Director of Corporate Services / Treasurer
PREPARED BY:	Ashton Romany, CPA Manager of Finance / Deputy Treasurer
REVIEWED BY:	Sharon Chambers, CAO
DATE:	April 25, 2022
SUBJECT:	2022 Final Tax Levy By-Law

RECOMMENDATION:

THAT Report COR 2022-018 prepared by the Manager of Finance / Deputy Treasurer, regarding the 2022 Final Tax Levy By-law be received.

SUMMARY:

This report outlines the 2022 Final Tax Levy By-Law to establish tax rates and collect property taxes for the 2022 property tax year.

BACKGROUND:

Council approved the 2022 Municipal Budget on February 28, 2022. The approved Budget includes a total Tax Levy for municipal purposes of $9,920,990. By-law 2022-19, presented for Council's approval, will give Corporate Services staff the authority to issue the final tax bills for 2022.

REPORT:

Through the 2022 budget process, it was determined that the levy required for municipal operating and capital needs for the year would be $9,920,990. In addition to the municipal levy,

the Township is responsible for billing on behalf of the Region of Waterloo and School Boards. Final tax bills are issued upon receipt of information on Regional tax ratios and tax rates, as well as information from the Ministry on the distribution of taxes amongst the four school boards.

Upon Council's approval of the by-law, staff will prepare final tax bills to the ratepayers in the Township.

ALIGNMENT WITH THE TOWNSHIP OF WILMOT STRATEGIC PLAN:

This report is aligned in many ways with each of the five (5) main goal areas, and corresponding strategies within the Township Strategic Plan. The strategic alignment was outlined in detail throughout each of the 2022 budget reports. These rates of taxation are required to raise the 2022 tax levy. The revenue from this levy will assist in fulfilling the 2022 financial requirements of the Township.

ACTIONS TOWARDS UNITED NATIONS SUSTAINABLE DEVELOPMENT GOALS:

This report is aligned with several of the UN Sustainable Development Goals:

Goal 3 – Good Health and Well-Being
Goal 6 – Clean Water and Sanitation
Goal 7 – Affordable and Clean Energy
Goal 8 – Decent Work and Economic Growth
Goal 9 – Industry, Innovation and Infrastructure
Goal 11 – Sustainable Cities and Communities
Goal 16 – Peace, Justice and Strong Institutions

FINANCIAL CONSIDERATIONS:

The tax levy is utilized to fund both the operating and capital expenses of the Township of Wilmot, as identified within the 2022 budget.

ATTACHMENTS:

- By-Law 2022-19 2022 Final Tax Levy & Rates

THE CORPORATION OF THE TOWNSHIP OF WILMOT
BY-LAW NO. 2022-19

BEING A BY-LAW TO ESTABLISH THE 2022 FINAL TAX LEVY, THE 2022 RATES OF TAXATION AND TO PROVIDE FOR THE PAYMENT OF TAXES BY INSTALMENTS.

WHEREAS Section 290 of the Municipal Act, 2001, S.O. 2001, CHAPTER 25, as amended, provides that the Council of a local municipality shall, after consideration of the estimates for the year, pass a by-law to adopt the estimates and levy a separate tax rate on the assessment in each property class;

AND WHEREAS Section 307 of the Municipal Act, 2001, S.O. 2001, CHAPTER 25, as amended, outlines the manner in which taxes shall be assessed against a property, and,

AND WHEREAS the Regional Municipality of Waterloo has provided the 2022 tax ratios and subclass reductions as required by the Municipal Act, 2001, S.O. 2001, CHAPTER 25, as amended,

NOW THEREFORE the Council of the Corporation of the Township of Wilmot hereby enacts as follows:

Definitions

- “Municipal Act” means the Municipal Act, 2001, S.O. 2001, CHAPTER 25, as amended.
- “Person” means a natural person, partnership, association, corporation, legal representative, trustee, trustee in bankruptcy, or receiver.
- “Property Owner” means a person who has legal title or right to a property.
- “Region” means the Regional Municipality of Waterloo.
- “Tax” or “Taxes” means any sum payable as taxes and includes upper tier, lower tier and school board property taxes, local improvement charges, and all other fees that may have been added to the property’s tax roll as outlined in the Municipal Act.
- “Township” means The Corporation of the Township of Wilmot.

Final Tax Levy

- The current estimates for 2022, totalling $9,920,990, detailed in the 2022 Municipal Budget, approved by Council on February 28, 2022, are used in the creation of the 2022 Township tax rates.
- Every property owner shall be taxed a Final Levy according to the tax rates in this by-law, save and except that portion of taxes raised by the 2022 Interim Levy under Section 317 of the Municipal Act.
- Taxes levied under this by-law shall be payable in multiple instalments, and the dates for payment shall be authorized by the Treasurer.
- Notice of 2022 Final Levy shall be mailed at least 21 days prior to the due date of the 1st Instalment.

- Failure to pay the amount of taxes due on the dates stated above shall constitute default and the provisions of By-law 2012-02 (being a by-law to provide for penalties to be applied to current taxes due and unpaid and for interest to be applied to taxes in arrears) shall be applicable.

- The Treasurer is hereby authorized to mail, deliver or cause to be mailed or delivered, the notice of taxes due to the address of the residence or place of business of the person to whom such notice is required to be given.

- Taxes shall be payable to the Township.

- The Treasurer is authorized to accept part payment from time to time on accounts of any taxes due and to give a receipt for such payment, provided that acceptance of any such payment shall not affect the collection of any percentage charge imposed and collectable under By-law No. 2012-02 in respect of non-payment of any taxes or any class of taxes or of any instalment thereof.

2022 Tax Rates

- The 2022 tax ratios provided by the Region are as follows:

Tax Class Description	Tax Ratio	Tax Class Description	Tax Ratio
Residential	1.0000	Commercial	1.9500
Residential Farmland Cl 1	1.0000	Shopping Centre	1.9500
Multi-Residential	1.9500	Industrial	1.9500
New Multi-Residential	1.0000	Industrial Farmland Cl 1	1.0000
Farm	0.2500	Landfill	1.5400
Managed Forest	0.2500	Pipeline	1.1613

- The 2022 sub-class reductions provided by the Region are as follows:

Tax Class Description	Sub-Class Reduction
Residential Farmland Cl 1	25%
Industrial Farmland Cl 1	25%

- The 2022 tax rates are set as follows:

Tax Code	Tax Code Description	Tax Rate
RT	Residential Taxable: Full	0.00268565
R1	Residential Taxable: Farmland Cl 1	0.00201424
MT	Multi-Residential Taxable: Full	0.00523702
NT	New Multi-Residential Taxable: Full	0.00268565
FT	Farm Taxable: Full	0.00067141
TT	Managed Forest Taxable: Full	0.00067141
CT	Commercial Taxable: Full	0.00523702
CU	Commercial Taxable: Excess Land	0.00523702
CX	Commercial Taxable: Vacant Land	0.00523702
C7	Commercial Taxable: Small-Scale On-Farm	0.00523702
XT	Commercial New Construction: Full	0.00523702
XU	Commercial New Construction: Excess Land	0.00523702
XX	Commercial New Construction: Vacant Land	0.00523702
YT	Office Building New Construction Taxable: Full	0.00523702
ST	Shopping Centre Taxable: Full	0.00523702
SU	Shopping Centre Taxable: Excess Land	0.00523702
SX	Shopping Centre Taxable: Vacant Land	0.00523702

ZT	Shopping Centre New Construction: Full	0.00523702
ZU	Shopping Centre New Construction: Excess Land	0.00523702
ZX	Shopping Centre New Construction: Vacant Land	0.00523702
IT	Industrial Taxable: Full	0.00523702
IH	Industrial Taxable: Full, Shared PIL	0.00523702
IK	Industrial Taxable: Excess Land, Shared PIL	0.00523702
IU	Industrial Taxable: Excess Land	0.00523702
IX	Industrial Taxable: Vacant Land	0.00523702
I1	Industrial Taxable: Farmland Cl 1	0.00201424
I7	Industrial Taxable: Small-Scale On-Farm	0.00523702
JT	Industrial New Construction: Full	0.00523702
JU	Industrial New Construction: Excess Land	0.00523702
JX	Industrial New Construction: Vacant Land	0.00523702
J7	Industrial Taxable: Small-Scale On-Farm	0.00523702
PT	Pipeline Taxable: Full	0.00311885
HT	Landfill Taxable: Full	0.00413590
E	Exempt	0.00000000

Severability

- If a Court of competent jurisdiction should declare any section or part of a section of this by-law to be invalid, such section or part of a section shall not be construed as having persuaded or influenced Council to pass the remainder of this by-law and it is hereby declared that the remainder of this by-law shall be valid and shall remain in full force and effect.

Coming to Force

- This by-law hereby rescinds By-law 2021-23 and shall come into force and take effect on the date of its passage by Council.

READ a first and second time in Open Council this 25th day of April, 2022.

READ a third time and finally passed in Open Council this 25th day of April, 2022.

_____
Mayor

_____
Clerk

CORPORATE SERVICES
Staff Report

REPORT NO:	COR 2022-017
TO:	Council
SUBMITTED BY:	Patrick Kelly CPA, CMA Director of Corporate Services / Treasurer
PREPARED BY:	Patrick Kelly CPA, CMA Director of Corporate Services / Treasurer
REVIEWED BY:	Sharon Chambers, CAO
DATE:	April 25, 2022
SUBJECT:	Project Grand River – Board Representation

RECOMMENDATION:

Whereas the proposed merger between Kitchener Power Corp. and Waterloo North Hydro Holding Corporation and their subsidiaries Kitchener-Wilmot Hydro Inc. and Waterloo North Hydro Inc. referred to as “Project Grand River” is anticipated to be finalized this year, the Council of the Township of Wilmot approves as follows:

THAT Arnold Drung, as recommended by PGR Joint Steering Committee, be appointed to serve as the independent board member on the new Holdco Board, representing the Townships of Wilmot, Wellesley and Woolwich; and further,

THAT the Mayor continue to serve on the KPC Board from June 1, 2022 until the date of the merger, and further,

THAT the Township of Wilmot support the recommended independent candidates for leadership roles on the New Holdco and Wiresco Boards of Directors.

SUMMARY:

This report provides Council with an overview of the proposed board composition as approved under the Merger Participation Agreement (MPA) and Unanimous Shareholders Agreement (USA).

BACKGROUND:

On December 6, 2021, under Report COR 2021-041, Council approved the Township proceeding with the proposed merger between Kitchener Power Corp. (KPC) and Waterloo North Hydro Holding Corporation (WNHH) and their subsidiaries Kitchener-Wilmot Hydro Inc. and Waterloo North Hydro Inc.; in accordance with the provisions of the MPA and USA Agreements.

REPORT:

Since Council approval to proceed with the proposed merger, staff have been working collaboratively with the other four (4) municipal shareholders, and the CEO's/CFO's of the local utility companies to finalize the MPA and USA agreements, as well as any incidental documentation, in order to submit a joint application (MAADs application) under the Ontario Energy Board Act 1998.

One significant component within the transition process is the establishment of a new board of directors for the merged entity. The recommendations for board composition have been developed by the current Board Chairs and Vice Chairs who serve on the PGR Joint Steering Committee (PGRJSC), with the WNHH members developing the City of Waterloo candidate recommendations, the KPC members developing the City of Kitchener candidate recommendations and the Townships CAO's developing the Townships candidate recommendation.

The recommendations have been developed based upon the Guiding Principles of Continuity, Competencies, Equity, Inclusion, Diversity and Belonging (EIDB).

Each current Board member was asked to indicate if they would be willing to serve on the new Boards and, for those members indicating they would, they were asked to do a self-assessment for each competency element. A Gap Analysis was then completed for each Board.

Following this process, the three (3) Township's held discussions to reach a consensus on the Independent Member candidate to represent the Township's on the HoldCo board. Based on those discussions and the new Board Competency Framework, staff are recommending that Council support the appointment of Mr. Arnold Drung to the New HoldCo board, effective the date of the merger.

Mr. Drung has been a member of the Waterloo North Hydro Holding Corporation Board of Directors since 2018. He has been President of Conestoga Meats for the past twenty (20) years, and resides with his family in the rural village of West Montrose.

Arnold has a good appreciation and understanding at both a personal and professional level for the hydro related priorities in rural communities and areas. Specifically, his focus on ensuring exceptional customer service delivery and response, as well as reliability of

distribution and the related capital investment that's required to ensure reliability is achieved, is appreciated.

Arnold has a strong business acumen, and holds a Masters in Business Administration (MBA) from Wilfrid Laurier University. In addition to the business acumen that he brings to the board table as the President of one of the largest industries and employers in the region, he has a solid background in regional economic development efforts having served as a board member and past Chair of the Waterloo Economic Development Corporation for many years. This background will serve us all well as the new hydro entity expands into other business areas, and also places greater efforts in the areas of clean technology and climate change initiatives.

Staff from all three (3) Townships are confident that Mr. Drung will continue to represent the rural interests in this role within the new Board.

Further the appointment of Mr. Drung, staff are supportive of the Project Grand River Joint Steering Committee (PGRJSC) recommendations of Rosa Lupo for Chair of the new HoldCo Board and Steve McCartney as Chair of the new WiresCo Board. Both individuals have significant experience serving on the board of directors for Kitchener Power Corp. and Waterloo North Hydro Holding Corporation.

ALIGNMENT WITH THE TOWNSHIP OF WILMOT STRATEGIC PLAN:

This report is aligned with the Strategic Plan goal of Responsible Governance through the action of Fiscal Responsibility. The Township's continued investment in the local hydro utility is a prudent business decision. The due diligence exercises undertaken through the board recruitment process are an example of responsible governance.

ACTIONS TOWARDS UNITED NATIONS SUSTAINABLE DEVELOPMENT GOALS:

This report and the proposed actions are consistent with the Sustainable Development Goals for Sustainable Cities and Communities, Responsible Consumption and Production, and Peace, Justice and Strong Institutions.

FINANCIAL CONSIDERATIONS:

There are no direct financial impacts to the Township through the board appointment process.

Income from Investments in Kitchener-Wilmot Hydro, and the new Merged Entity help to offset the overall levy requirement to fund municipal operations.

ATTACHMENTS:

- None

PUBLIC WORKS AND ENGINEERING

Staff Report

REPORT NO:	PWE 2022-13
TO:	Council
SUBMITTED BY:	Jeff Molenhuis, P. Eng., Director of Public Works and Engineering
PREPARED BY:	Mark Jeffery, CET, Senior Engineering Technologist
REVIEWED BY:	Sharon Chambers, CAO
DATE:	April 25, 2022
SUBJECT:	Co-operative Contract - Annual Surface Treatment Program

---

RECOMMENDATION:

THAT Report PWE 2022-13, Co-operative Contract – Annual Surface Treatment Program report be received for information, and,

THAT Council approve the participation in the co-operative tender with Oxford County for the application of surface treatment by Walker Construction (Formally Norjohn) for the 2022 Annual Surface Treatment Program, as per their bid submission dated March 15, 2022, in the amount of $341,963.60 plus HST.

SUMMARY:

This report outlines the procurement processes and recommends award of a tender to Walker Construction for the application of surface treatment for the Township's Annual Surface Treatment Program.

BACKGROUND:

As per the Procurement By-Law 2021-43, purchasing through co-operatives and/or joint contracts is encouraged when such purchases are in the best interests of the Township. Council approval is required if the Corporation's portion exceeds $100,000 in value.

The surface treatment program timing is based on a program to upgrade loose top roads to hard surface roads. The program also considers life-cycle replacement/renewal/repair for existing low class bituminous roads to maintain adequate hard surface.

The 2022 Public Works & Engineering Work Program identified the application of surface treatment to the following Township roads:

- Bridge Street (Oxford Road #5 to Diamond Road) - Single Surface
- Bean Road (Oxford Road #5 to Diamond Road) – Single Surface
- Bean Road (Diamond Road to Walker Road) – Single Surface
- Bean Road (Walker Road to Tye Road) – Single Surface

REPORT:

Oxford County, on behalf of the Township, has received price quotes from qualified contractors for tender 2022-325, Surface Treatment, and has subsequently entered into a contract with Walker Construction (Formally Norjohn) for the application of surface treatment for a term of one (1) year.

The contract will address hard surface sections of road with tar and chip surface treatment and to maintain adequate low class bituminous (LCB) hard surface road assets.

Based on the tender rates and anticipated work in 2022, the estimated cost for surface treatment on the four (4) sections of road mentioned above in the Township is $ 347,982.16 net of HST rebate.

ALIGNMENT WITH THE TOWNSHIP OF WILMOT STRATEGIC PLAN:

This initiative supports the goals and strategies of enhancing:

- Quality of Life through Accessibility and Inclusivity, Active Transportation and Transit; and

- Responsible Governance through Active Communications, Fiscal Responsibility and Infrastructure Investments.

ACTIONS TOWARDS UNITED NATIONS SUSTAINABLE DEVELOPMENT GOALS:

Goal 9: Industry, Innovation, and Infrastructure
Goal 11: Sustainable Cities and Communities

FINANCIAL CONSIDERATIONS:

The budget for this project is outlined below:

Funding Source	**Amount**
Ontario Community Infrastructure Fund	$ 341,260
Development Charges – Public Works	56,740
Total Budget	**$ 398,000**

Given the tender amount of $ 347,982.16 net of HST, the 2022 Surface Treatment Program is anticipated to remain within the budget allocation for the year. The remaining funds from this project funding source will be utilized to offset costs required to upgrade roadway platform widths adjacent to bridge structures identified to receive guiderail installation during the 2022 Roadside Safety Program.

ATTACHMENTS:

Figure 1 – 2022 Surface Treatment Locations

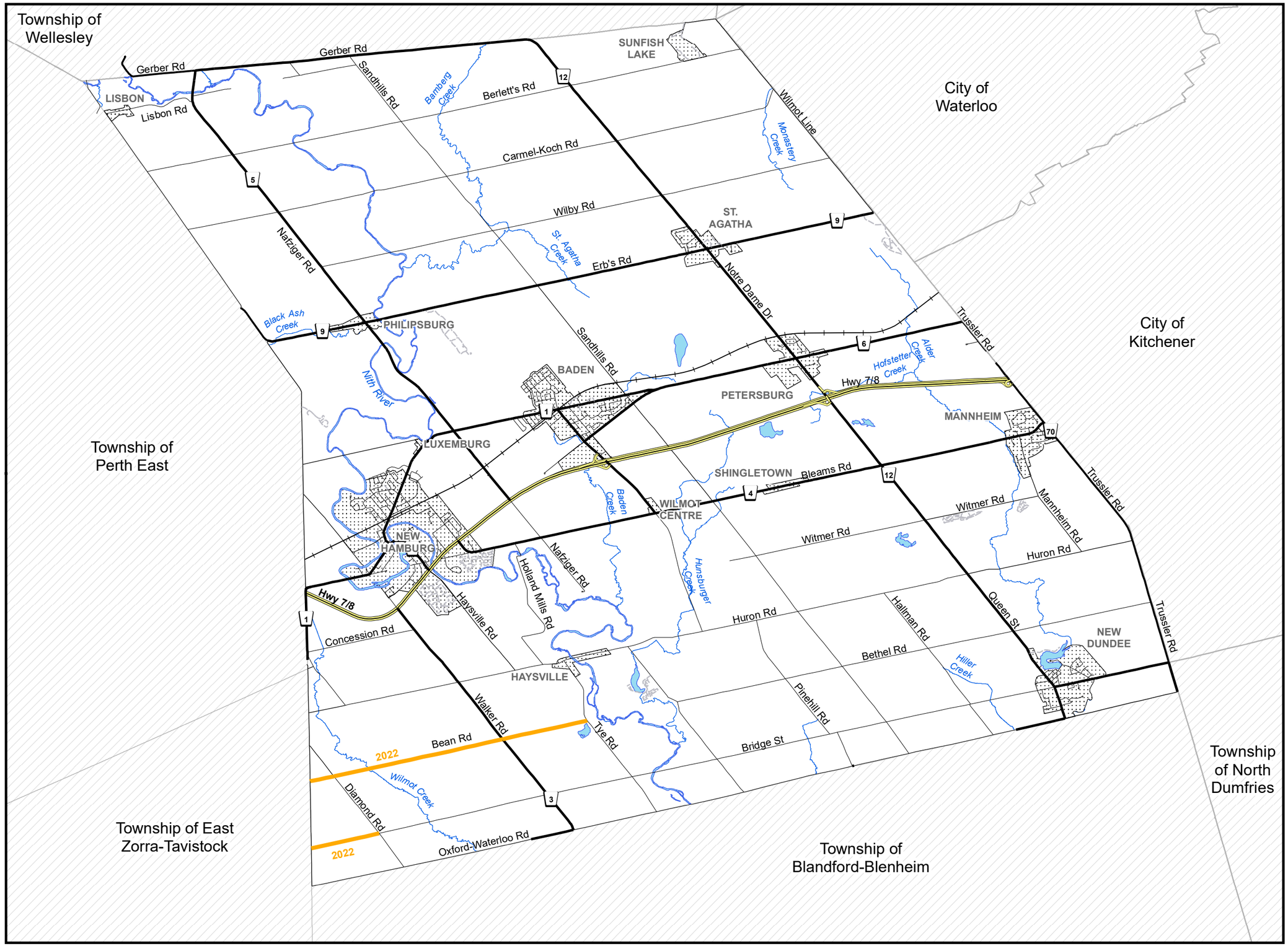

TOWNSHIP OF Wilmot

DEPARTMENT OF PUBLIC WORKS & ENGINEERING

Rural Surfacing Proposed Plan 2022

January 2022

N W E S

1:80,000

Legend

Roads

Class

- Regional
- M.T.O. Highway
- M.T.O. Ramp
- Arterial
- Collector
- Local Street
- Private

Rural Road Surfaces

Material

- Asphalt
- Tar and Chip
- Gravel
- Railway
- Surface Water
- Adjacent Municipalities

PUBLIC WORKS AND ENGINEERING

Staff Report

REPORT NO:	PWE 2022-14
TO:	Council
SUBMITTED BY:	Jeff Molenhuis, P. Eng., Director of Public Works and Engineering
PREPARED BY:	Mark Jeffery, CET, Senior Engineering Technologist
REVIEWED BY:	Sharon Chambers, CAO
DATE:	April 25, 2022
SUBJECT:	Co-operative Contract – Pavement Markings

RECOMMENDATION:

THAT Report PWE 2022-14 Co-operative Contract – Pavement Markings be received for information purposes; and further,

THAT Council approve participation in the co-operative tender with the Grand River Co-operative Purchasing Group (GRCPG) for supply and placement of Pavement Markings by Guild Electric Limited at a cost of $85,665.28 plus HST, for a term of one (1) year, with the option of two (2) additional, one (1) year terms.

SUMMARY:

This report outlines the procurement processes and recommends award of a term contract to Guild Electric Limited of Toronto for the supply and placement of centerline pavement markings for the Township's Annual Pavement Marking Program.

BACKGROUND:

The Township is a participating member of the Grand River Co-operative Purchasing Group, represented by the Supervisor of Procurement. Participation on this co-operative buying group has permitted the Township access to significant savings on the procurement of various municipal supplies and services.

As per the Procurement By-Law 2021-43, purchasing through co-operatives and/or joint contracts is encouraged when such purchases are in the best interests of the Township. Council approval is required if the Corporation's portion exceeds $100,000 in value. These conditions include term contracts that have a cumulative value over the threshold identified.

The Township is responsible for the operation and maintenance of approximately 270 centerline kilometers of roadway. As part of the annual operation and maintenance program an effective pavement marking program is undertaken to provide the community with well delineated roadways that meet the needs of motoring public and to also adhere to provincial safety requirements.

Properly marked roadways help to provide guidance for motorists by identifying when it is safe to pass, distinguish between lanes and improves overall visibility during difficult driving conditions in inclement weather such as fog, heavy rain and blowing snow.

REPORT:

The City of Cambridge, on behalf of the GRCPG, has received price quotes from qualified contractors for Quotation 2022-14, Pavement Marking, and has since executed a contract with Guild Electric Limited to supply and place pavement markings on behalf of the GRCPG for a period of one (1) year with the option to extend the contract for two (2) additional, one (1) year terms.

The GRCPG contract inclusion clause as identified in quotation documents allows participating members of the purchasing co-operative to join under the same terms and conditions outlined in the lead member contract at any time through the duration of the contract term.

This contract will address rural and urban centre line marking in 2022. The Township intends to complete various line markings throughout the Township based on the cyclical pavement marking program utilized in previous years to meet the budget allocation.

Based on the tender rates and anticipated work in 2022, the estimated cost for supply and placement of centerline pavement markings in the Township is $ 87,172.99 net of HST rebate.

Following the 2022 operating program, the co-op program will be considered for the optional two (2) additional terms based on the performance and evaluation of the contractor's activities for the previous year.

ALIGNMENT WITH THE TOWNSHIP OF WILMOT STRATEGIC PLAN:

This initiative supports the goals and strategies of enhancing:

- Quality of Life through Active Transportation and Transit investments; and
- Responsible Governance through Active Communications, Fiscal Responsibility and Infrastructure Investments.

ACTIONS TOWARDS UNITED NATIONS SUSTAINABLE DEVELOPMENT GOALS:

Goal 9: Industry, Innovation, and Infrastructure
Goal 11: Sustainable Cities and Communities

FINANCIAL CONSIDERATIONS:

The operating budget for this project is outlined below:

Funding Source	**Amount**
General Levy – Roads Maintenance	$ 100,000
Total Budget	**$ 100,000**

Given the tender amount of $ 87,172.99 net of HST rebate, the provision within the 2022 Roads Maintenance operating budget for the Line Pavement Marking Program is anticipated to remain within the budget allocation for the year. The remaining funds will be utilized to support the in-house painting program for stop bars and other minor line works, and a portion will be considered for additional line marking needs.

ATTACHMENTS:

None

PUBLIC WORKS AND ENGINEERING

Staff Report

REPORT NO:	PWE 2022-15
TO:	Council
SUBMITTED BY:	Jeff Molenhuis, P. Eng., Director of Public Works and Engineering
PREPARED BY:	Mark Jeffery CET, Senior Engineering Technologist
REVIEWED BY:	Sharon Chambers, CAO
DATE:	April 25, 2022
SUBJECT:	Tye Road #28 C/T-13 Culvert Replacement – Award of Contract

RECOMMENDATION:

THAT Report PWE 2022-15 Tye Road #28 C/T-13 Culvert Replacement be received for information purposes; and further,

THAT Council award RFT 2022-03 Tye Road #28/T-13 Culvert Replacement to Cox Construction Limited, as per their bid submission dated March 30, 2022, in the amount of $408,919.99 plus HST.

SUMMARY:

This report outlines the procurement processes and recommends award of tender to Cox Construction Limited of Guelph for replacement of the Tye Road #28/C T-13 twin culvert structure. The bid process also included restoration works for the outlet and sediment basin for the Fairview Street culvert, in New Hamburg.

BACKGROUND:

The 2017 and 2019 bi-annual regulatory bridge safety inspections (OSIM) identified the Tye Road twin culvert structure, #28/C T-13, to be in an advancing state of poor condition and in need of replacement. The roadside safety deficiencies also included in the recent OSIM inspection reports for this structure identified the need of a guiderail system to be installed to protect vehicles from the roadside hazards identified at this same location.

The restoration and rehabilitation to the outlet structure and sediment basin at the Fairview Street culvert was identified by staff to be restored during the Township's Asset Management Data Collection Program for storm sewer assets completed in 2021.

REPORT:

On March 4, 2022, the tender document was made available online through the Township's e-bidding site. There was a total of eighteen (18) plan takers, with a total of three (3) bids received at time of close on March 30, 2022.

The lowest bid received was from Cox Construction Limited of Guelph, ON at a cost of $408,919.99 plus HST. The low bidder has provided the appropriate bid bond documentation.

Results of the bids received are summarized below:

Bidder	Location	Bid Amount
Cox Construction Limited	Guelph, ON	$ 408,919.99
Enscon Ltd	North York, ON	$ 486,557.00
Master Utility Division Inc	Sutton West, ON	$ 542,545.00
AVERAGE BID		$ 479,340.66

The above figures do not include HST. The bids include a $40,000 contingency allowance for material testing and any unforeseen expenses encountered during construction.

The works for Tye Road have been specified to include a single lane open during the course of construction. Due to the restriction of in-water works for this watercourse, construction is not permitted to commence until after July 15th, and we anticipate all works will be completed by the end of August. However, once the successful contractor's schedule has been confirmed an update will be provided through Communications.

ALIGNMENT WITH THE TOWNSHIP OF WILMOT STRATEGIC PLAN:

This initiative supports the goals and strategies of enhancing:

- Quality of Life through Active Transportation and Transit investments; and

- Responsible Governance through Active Communications, Fiscal Responsibility and Infrastructure Investments.

ACTIONS TOWARDS UNITED NATIONS SUSTAINABLE DEVELOPMENT GOALS:

- Goal 9: Industry, Innovation, and Infrastructure
- Goal 11: Sustainable Cities and Communities

FINANCIAL CONSIDERATIONS:

The capital budget allocations for this project are outlined below:

Funding Source	**Amount**
Canada Community Building Fund (CCBF)	$ 119,000
External Debt Financing	306,000
Fairview Culvert Repair - Minor Capital (Accrual)	$ 9,500
Total Budget	**$ 434,500**

Given the tender amount of $416,116.98 net of HST rebate, Tender RFT 2022-03, Tye Road #28/C T-13 culvert replacement and Fairview Street culvert works is anticipated to remain within the budget allocation for the year.

The debt financing component will be incorporated into the Township's Debt Management and Reserve Fund Strategy, set to commence in the spring 2022.

ATTACHMENTS:

None

TOWNSHIP OF WILMOT
2022 STATEMENT OF OPERATIONS AS OF MARCH 31, 2022 (UN-AUDITED)

	2022 Budget	2022 Actual	Variance %
GENERAL GOVERNMENT			
REVENUE			
Administration Fees / Sale of Surplus Assets [1]	(100,000)	(26,314)	26.3%
Grant Funding - General Government [2]	(35,000)	(35,000)	100.0%
Licenses and Fines [3]	(83,000)	(56,700)	68.3%
Penalties & Interest Revenue [4]	(231,500)	(45,237)	19.5%
	(449,500)	**(163,250)**	**36.3%**
EXPENSES			
Council [5]	177,950	40,132	22.6%
Municipal Grants Program [6]	65,600	65,216	99.4%
Office of the CAO [7]	426,495	106,212	24.9%
Information and Legislative Services [8]	284,000	74,787	26.3%
Insurance & Legal Expenses [9]	325,225	88,071	27.1%
Municipal Law Enforcement/Animal Control [10]	202,245	54,095	26.7%
Crossing Guards Operating Expenses [11]	56,100	9,087	16.2%
Municipal Election [12]	22,500	1,743	7.7%
Corporate Services [13]	960,860	201,214	20.9%
IT Services [14]	456,880	67,886	14.9%
	2,977,855	**708,444**	**23.8%**
FIRE SERVICES			
REVENUE			
Fire Services Revenues [15]	(80,080)	(12,457)	15.6%
	(80,080)	**(12,457)**	**15.6%**
EXPENSES			
Fire Services Administration [16]	1,106,460	215,213	19.5%
Fire Services Operating Expenses [17]	405,875	76,598	18.9%
	1,512,335	**291,811**	**19.3%**

TOWNSHIP OF WILMOT
2022 STATEMENT OF OPERATIONS AS OF MARCH 31, 2022 (UN-AUDITED)

	2022 Budget	2022 Actual	Variance %
PUBLIC WORKS AND ENGINEERING			
REVENUE			
Roads/Engineering Service Charges [18]	(251,500)	(46,030)	18.3%
Aggregate Resource Fees [19]	(175,000)	-	0.0%
Grant Funding - Public Works [20]	(23,000)	-	0.0%
	(449,500)	**(46,030)**	**10.2%**
EXPENSES			
Public Works and Engineering Administration [21]	420,070	30,524	7.3%
Roads Administration [22]	733,085	109,507	14.9%
Roads Operating Expenses [23]	763,900	53,671	7.0%
Winter Control Expenses [24]	776,310	498,487	64.2%
Municipal Drainage Operating Expenses [25]	57,000	2,011	3.5%
Street Lighting Operating Expenses [26]	130,000	18,738	14.4%
	2,880,365	**712,939**	**24.8%**

TOWNSHIP OF WILMOT
2022 STATEMENT OF OPERATIONS AS OF MARCH 31, 2022 (UN-AUDITED)

	2022 Budget	2022 Actual	Variance %
PARKS, FACILITIES AND RECREATION SERVICES			
REVENUE			
Wilmot Recreation Complex Revenues [27]	(1,136,920)	(289,519)	25.5%
Grant Funding - Parks Facilities and Recreation [28]	(3,750)	(500)	13.3%
Park, Facility and Community Centre Rental Revenue [29]	(149,550)	(29,907)	20.0%
	(1,290,220)	**(319,926)**	**24.8%**
EXPENSES			
Recreation Administration [30]	830,970	187,015	22.5%
Wilmot Recreation Complex Administration [31]	1,446,820	289,795	20.0%
Wilmot Recreation Complex Operating Expenses [32]	742,600	184,829	24.9%
Parks & Facilities Administration [33]	1,159,725	194,228	16.7%
Parks and Community Centre Operating Expenses [34]	278,100	41,748	15.0%
Municipal Facilities Operating Expenses [35]	152,830	16,289	10.7%
Abandoned Cemetery Operating Expenses	3,670	918	25.0%
	4,614,715	**914,821**	**19.8%**

TOWNSHIP OF WILMOT
2022 STATEMENT OF OPERATIONS AS OF MARCH 31, 2022 (UN-AUDITED)

	2022 Budget	2022 Actual	Variance %
CULTURAL SERVICES			
REVENUE			
Castle Kilbride Admissions & Events [36]	(26,825)	(1,440)	5.4%
Grant Funding - Castle Kilbride [37]	(25,005)	-	0.0%
	(51,830)	**(1,440)**	**2.8%**
EXPENSES			
Castle Kilbride Administration [38]	310,840	71,910	23.1%
Castle Kilbride Operating Expenses [39]	23,050	778	3.4%
Archives Operating Expenses	1,830	-	0.0%
Heritage Wilmot Operating Expenses	8,940	-	0.0%
	344,660	**72,688**	**21.1%**
DEVELOPMENT SERVICES			
REVENUE			
Planning Application Fees [40]	(287,240)	(13,718)	4.8%
Business Licensing	(5,000)	(370)	7.4%
	(292,240)	**(14,088)**	**4.8%**
EXPENSES			
Planning [41]	269,995	59,593	22.1%
Economic Development [42]	70,000	60,000	85.7%
	339,995	**119,593**	**35.2%**
TOTAL OPERATING			
REVENUES	**(2,613,370)**	**(557,190)**	**21.3%**
EXPENSES	**12,669,925**	**2,820,297**	**22.3%**
NET GENERAL LEVY EXPENDITURE	**10,056,555**	**2,263,107**	**22.5%**

NOTES:

1 Includes administrative fees associated with tax certificates; NSF payments; account balance transfer fees; tax sale and sale of surplus assets.

2 Includes OCIF formula funding towards the Asset Management Coordinator role ($35,000).

3 Includes Dog and Kennel Licences ($49,855); Parking Fines ($3,250); Marriage Licences ($1,545); Property Standards Fees ($400); Lottery Licences ($1,313); Provincial Offences ($337).

4 Includes penalty and interest on overdue water accounts ($4,065) and taxes receivable ($41,172).

5 Includes YTD honorariums for Council Members.

6 Municipal Grant Program allocations were approved under Report COR 2021-046.

7 Includes direct and indirect staffing costs associated with the Office of the CAO.

8 Includes direct and indirect staffing costs associated with Information and Legislative Services.

9 Waterloo Region Municipal Insurance Pool Premiums are typically remitted in Q2. YTD expenditures represent claims under the Township's deductible limit ($10,000) and legal expenses, net of allocations to user-pay operations.

10 Includes direct and indirect staffing costs associated with Municipal Law Enforcement Officers and contracted services for Animal Control.

11 Includes direct and indirect staffing costs associated with crossing guards.

12 YTD expenditures includes maintenance of the voters list.

13 Includes direct and indirect staffing costs for Corporate Services net of cost allocations from user-pay divisions.

14 Includes direct and indirect staffing costs for IT Services. Expenditures also include support contracts and web service charges which are paid throughout the year.

15 Includes revenue from Fire Permits ($660); billable calls/activities ($6,217) and Boundary Service Agreement with Blandford-Blenheim ($5,580).

16 Includes direct and indirect staffing costs for Fire Services, including Practices, Fire Calls and other VFF activities.

17 Includes non-staffing related costs to maintain an effective Fire Services such as vehicle repairs and maintenance, clothing/PPE, dispatch fees and utilities.

18 Roads/Engineering Service Charges activities typically peaking during Q2/Q3.

19 Ontario Aggregate Resources Corporation (OARC) fees are based upon actual tonnage extracted from private pits within the Township from the preceding fiscal year. Fees are typically received in late Q3.

20 OMAFRA funding for Municipal Drainage Superintendent Services for 2022 typically billed in late Q4.

21 YTD costs reflect direct and indirect staffing costs for Public Works and Engineering Administration net of cost allocation to Water/Sanitary.

22 YTD costs reflect direct and indirect staffing costs for Road Operations excluding Winter Control.

23 Roads operating costs are impacted by seasonality. The majority of focus in Q1 is on Winter Control Operations.

24 Winter Control activities peak in Q1 and Q4. Any savings from the program at year end are transferred to the dedicated reserve fund to offset any overages from years of higher than average snowfall.

25 Majority of drainage works are typically billed by the drainage superintendent in late Q4.

26 YTD Street Light Hydro Costs reflect consumption in Q1.

27 Revenues include: Aquatics ($58,236); Ice Pads/Arena Floor ($179,716); Concession ($19,030); Programming ($3,913); Room/Field Rentals ($7,273); Rink Board Advertising ($17,142); Other ($4,209).

28 Includes a donation from the New Dundee Women's Institute towards the Bandshell Garden.

29 Revenues include: NH Arena/CC ($11,652); Baden ($14,623); Haysville ($2,075); Mannheim ($895); New Dundee ($76); New Hamburg Parks ($0); Petersburg ($0); St Agatha ($586); Other ($0). Activities typically peak in Q2/Q3.

30 Costs include direct and indirect staffing costs for Recreation Administration, Scheduling and Customer Service personnel.

31 Costs include direct and indirect, full-time and part-time, staffing costs for the Wilmot Recreation Complex.

32 Costs include Building/Grounds Maintenance, Utility Costs, Equipment Repairs and Maintenance at the WRC.

33 Costs include direct and indirect staffing costs for all Parks and Facilities staff excluding the WRC.

34 Costs include Building/Grounds Maintenance, Utility Costs, Equipment Repairs and Maintenance at parks and community centres.

35 Costs include Building/Grounds Maintenance, Utility Costs, Equipment Repairs and Maintenance at municipal facilities.

36 Castle Kilbride re-opened in late Q1. Revenue includes: Admission ($862); Giftshop ($68); Programs & Workshops ($510); Special Events ($0) and Other ($0).

37 Federal/Provincial Grants are received periodically throughout the year.

38 Costs include direct and indirect staffing costs for Castle Kilbride Administration.

39 Operating Expenses tend to peak in the last three quarters as the Castle opened in late Q1.

40 Majority of planning and business licencing revenues anticipated to occur over the next three (3) quarters.

41 Costs include direct and indirect staffing costs for Planning, net of cost allocations from Building Services.

42 YTD Expenditures include Waterloo Region Economic Development Corporation (WREDC) membership ($50,000) and Waterloo Region Tourism Marketing Corporation ($10,000).

TOWNSHIP OF WILMOT
2022 STATEMENT OF OPERATIONS (USER-PAY) AS OF MARCH 31, 2022 (UN-AUDITED)

	2022 Budget	2022 Actual	Variance %
WATER/SANITARY			
REVENUE			
Utility User Fees [1]	(6,381,810)	(725,556)	11.4%
Utilities Sales, Service Charges [2]	(59,390)	(4,852)	8.2%
	(6,441,200)	**(730,408)**	**11.3%**
EXPENSES			
Water/Sanitary Administration [3]	618,050	129,399	20.9%
Water/Sanitary Operating Expenses [4]	1,385,830	281,751	20.3%
Water Regional Charges [5]	1,517,000	212,658	14.0%
Sanitary Regional Charges [5]	1,854,830	314,474	17.0%
	5,375,710	**938,281**	**17.5%**
TRANSFER (TO)/FROM RESERVE FUNDS [6]	**(1,065,490)**	**207,874**	**-19.5%**
CEMETERY			
REVENUE			
Cemetery User Fees [7]	(80,300)	(8,029)	10.0%
Cemetery Investment Income [8]	(3,000)	-	0.0%
	(83,300)	**(8,029)**	**9.6%**
EXPENSES			
Cemetery Administration [9]	22,200	1,442	6.5%
Cemetery Operating Expenses [10]	58,170	18,524	31.8%
	80,370	**19,967**	**24.8%**
TRANSFER (TO)/FROM RESERVE FUNDS [11]	**(2,930)**	**11,938**	**N/A**

TOWNSHIP OF WILMOT (USER-PAY)
2022 STATEMENT OF OPERATIONS (USER-PAY) AS OF MARCH 31, 2022 (UN-AUDITED)

	2022 Budget	2022 Actual	Variance %
BUILDING			
REVENUE			
Building Permit Fees [12]	(671,500)	(41,640)	6.2%
	(671,500)	**(41,640)**	**6.2%**
EXPENSES			
Building Administration [13]	468,210	113,451	24.2%
Building Operating Expenses [14]	278,515	67,030	24.1%
	746,725	**180,481**	**24.2%**
TRANSFER (TO)/FROM RESERVE FUNDS [15]	**75,225**	**138,841**	**184.6%**

NOTES:

1 YTD fees represent January billing for New Hamburg residents and January/February billing for the rest of the Township.

2 Sales and Service Charges include Sale of Water Meters, Final Reading fees and other misc. fees.

3 YTD costs reflect direct and indirect staffing costs for Utilities.

4 Utilities operating expenses include allocation to General Levy, Contracted Services, Fuel, etc.

5 Reflects flows to/from Region of Waterloo for the months of January and February.

6 Transfers to/from reserve funds are completed as part of year end processing.

7 Cemetery User Fees include Burials, Sale of Plots, etc.

8 Investment income calculated in part of year end processing.

9 Costs reflect direct and indirect staffing costs for Cemetery Operations.

10 Cemetery Operating expenses include Grave Opening, Foundations, Buildings/Grounds Maintenance, Allocation to General Levy for administrative support.

11 Transfers to/from reserve funds are completed as part of year end processing.

12 YTD permit fees are outlined within the Building Statistics reporting from Development Services.

13 Includes direct and indirect staffing costs for Building Services Operations.

14 Includes operating expenses include allocation to General Levy, Contracted Services, Vehicle Repairs/Maintenance, etc.

15 Transfers to/from reserve funds are completed as part of year end processing.

CORPORATE SERVICES
Staff Report

REPORT NO:	COR 2022-019
TO:	Council
SUBMITTED BY:	Patrick Kelly CPA, CMA, Director of Corporate Services / Treasurer
PREPARED BY:	Ashton Romany, CPA, Manager of Finance / Deputy Treasurer
REVIEWED BY:	Sharon Chambers, CAO
DATE:	April 25, 2022
SUBJECT:	Statement of Operations as of March 31, 2022 (un-audited)

RECOMMENDATION:

THAT Report COR 2022-019 Statement of Operations as of March 31, 2022, as prepared by the Manager of Finance / Deputy Treasurer, be received for information purposes.

SUMMARY:

This report outlines the statement operations as of March 31, 2022.

BACKGROUND:

Corporate Services staff report to Council on the status of municipal operations on a quarterly basis.

REPORT:

Attached is the statement of operations as of March 31, 2022. The report is divided into sections outlining revenues and expenses from general government, protective services, transportation services, recreation and cultural services and development services.

Net General Levy Expenditure

The total section of the report outlines revenues and expenses from all municipal operations, and how they relate to the Council approved operating budget. As of the statement date, YTD revenues and expenses are within the budgetary guidelines, and the net effect on general levy is 22.5% of budget (Q1 2021 – 21.3%).

Wilmot Recreation Complex

The WRC represents approximately 22.8% of all operating expenses from the general levy. Staff are reporting that as of the statement date, operations met Q1 budget projections, with the combination of administrative and operating/maintenance costs at approximately 21.7% of the annual budget (Q1 2021 – 17.6%).

The WRC also represents approximately 43.5% of the budgeted operating revenue to the general levy. As of the statement date, WRC revenues appear to be on target to meet budget projections, with current receipts at 25.5% of the annual budget (Q1 2021 – 11.3%).

Winter Maintenance

Winter maintenance activity levels for Q1 2022 were greater than Q1 2021. YTD expenditures of $498,487 represent 64.2% of the annual budget (Q1 2021 – 49.6%). The capacity of this expense line to stay within the total budget of $763,310 will be contingent upon weather events in early Q2, and the last few months of 2022.

Any savings from the program at year end are transferred to the dedicated reserve fund to offset any overages from years of higher than average snowfall.

User Pay Divisions

The second section of the attached statements outlines financial performance from the user pay divisions. Each of these divisions is independent of the levy, and any surplus/deficit from current year operations is transferred to/from dedicated reserve funds at year end.

Each division is well below the projected year-end transfers to reserve funds, for a number of reasons. Water/Sanitary consumption peaks during the summer season while building activity levels and cemetery burials historically peak in the second and third quarter of the fiscal year.

COVID-19 Impacts

The attached statements outline operations as of March 31, 2022. With the gradual reopening that occurred over the first quarter, revenues appear to be on target with the 2022 budget expectations, particularly at the Wilmot Recreation Complex. Future quarterly updates will outline any significant deviations from budget expectations.

ALIGNMENT WITH THE TOWNSHIP OF WILMOT STRATEGIC PLAN:

This report is aligned with the Strategic Plan goal of Responsible Governance, through the strategies of fiscal responsibility and infrastructure investments.

ACTIONS TOWARDS UNITED NATIONS SUSTAINABLE DEVELOPMENT GOALS:

This report is aligned with several of the UN Sustainable Development Goals:

Goal 3 – Good Health and Well-Being
Goal 6 – Clean Water and Sanitation
Goal 7 – Affordable and Clean Energy
Goal 8 – Decent Work and Economic Growth
Goal 9 – Industry, Innovation and Infrastructure
Goal11 – Sustainable Cities and Communities
Goal 16 – Peace, Justice and Strong Institutions

FINANCIAL CONSIDERATIONS:

As part of year end processing, net operating expenditures, capital funding from general levy are deducted from income generated through taxation, provincial grants and investments, to calculate the annual transfer to/from infrastructure reserve funds.

ATTACHMENTS:

Appendix A – Statement of Operations as of March 31, 2022 (Un-audited)

TOWNSHIP OF WILMOT
2022 STATEMENT OF OPERATIONS AS OF MARCH 31, 2022 (UN-AUDITED)

	2022 Budget	2022 Actual	Variance %
GENERAL GOVERNMENT			
REVENUE			
Administration Fees / Sale of Surplus Assets [1]	(100,000)	(26,314)	26.3%
Grant Funding - General Government [2]	(35,000)	(35,000)	100.0%
Licenses and Fines [3]	(83,000)	(56,700)	68.3%
Penalties & Interest Revenue [4]	(231,500)	(45,237)	19.5%
	(449,500)	**(163,250)**	**36.3%**
EXPENSES			
Council [5]	177,950	40,132	22.6%
Municipal Grants Program [6]	65,600	65,216	99.4%
Office of the CAO [7]	426,495	106,212	24.9%
Information and Legislative Services [8]	284,000	74,787	26.3%
Insurance & Legal Expenses [9]	325,225	88,071	27.1%
Municipal Law Enforcement/Animal Control [10]	202,245	54,095	26.7%
Crossing Guards Operating Expenses [11]	56,100	9,087	16.2%
Municipal Election [12]	22,500	1,743	7.7%
Corporate Services [13]	960,860	201,214	20.9%
IT Services [14]	456,880	67,886	14.9%
	2,977,855	**708,444**	**23.8%**
FIRE SERVICES			
REVENUE			
Fire Services Revenues [15]	(80,080)	(12,457)	15.6%
	(80,080)	**(12,457)**	**15.6%**
EXPENSES			
Fire Services Administration [16]	1,106,460	215,213	19.5%
Fire Services Operating Expenses [17]	405,875	76,598	18.9%
	1,512,335	**291,811**	**19.3%**

TOWNSHIP OF WILMOT
2022 STATEMENT OF OPERATIONS AS OF MARCH 31, 2022 (UN-AUDITED)

	2022 Budget	2022 Actual	Variance %
PUBLIC WORKS AND ENGINEERING			
REVENUE			
Roads/Engineering Service Charges [18]	(251,500)	(46,030)	18.3%
Aggregate Resource Fees [19]	(175,000)	-	0.0%
Grant Funding - Public Works [20]	(23,000)	-	0.0%
	(449,500)	**(46,030)**	**10.2%**
EXPENSES			
Public Works and Engineering Administration [21]	420,070	30,524	7.3%
Roads Administration [22]	733,085	109,507	14.9%
Roads Operating Expenses [23]	763,900	53,671	7.0%
Winter Control Expenses [24]	776,310	498,487	64.2%
Municipal Drainage Operating Expenses [25]	57,000	2,011	3.5%
Street Lighting Operating Expenses [26]	130,000	18,738	14.4%
	2,880,365	**712,939**	**24.8%**

TOWNSHIP OF WILMOT
2022 STATEMENT OF OPERATIONS AS OF MARCH 31, 2022 (UN-AUDITED)

	2022 Budget	2022 Actual	Variance %
PARKS, FACILITIES AND RECREATION SERVICES			
REVENUE			
Wilmot Recreation Complex Revenues [27]	(1,136,920)	(289,519)	25.5%
Grant Funding - Parks Facilities and Recreation [28]	(3,750)	(500)	13.3%
Park, Facility and Community Centre Rental Revenue [29]	(149,550)	(29,907)	20.0%
	(1,290,220)	**(319,926)**	**24.8%**
EXPENSES			
Recreation Administration [30]	830,970	187,015	22.5%
Wilmot Recreation Complex Administration [31]	1,446,820	289,795	20.0%
Wilmot Recreation Complex Operating Expenses [32]	742,600	184,829	24.9%
Parks & Facilities Administration [33]	1,159,725	194,228	16.7%
Parks and Community Centre Operating Expenses [34]	278,100	41,748	15.0%
Municipal Facilities Operating Expenses [35]	152,830	16,289	10.7%
Abandoned Cemetery Operating Expenses	3,670	918	25.0%
	4,614,715	**914,821**	**19.8%**

TOWNSHIP OF WILMOT
2022 STATEMENT OF OPERATIONS AS OF MARCH 31, 2022 (UN-AUDITED)

	2022 Budget	2022 Actual	Variance %
CULTURAL SERVICES			
REVENUE			
Castle Kilbride Admissions & Events [36]	(26,825)	(1,440)	5.4%
Grant Funding - Castle Kilbride [37]	(25,005)	-	0.0%
	(51,830)	**(1,440)**	**2.8%**
EXPENSES			
Castle Kilbride Administration [38]	310,840	71,910	23.1%
Castle Kilbride Operating Expenses [39]	23,050	778	3.4%
Archives Operating Expenses	1,830	-	0.0%
Heritage Wilmot Operating Expenses	8,940	-	0.0%
	344,660	**72,688**	**21.1%**
DEVELOPMENT SERVICES			
REVENUE			
Planning Application Fees [40]	(287,240)	(13,718)	4.8%
Business Licensing	(5,000)	(370)	7.4%
	(292,240)	**(14,088)**	**4.8%**
EXPENSES			
Planning [41]	269,995	59,593	22.1%
Economic Development [42]	70,000	60,000	85.7%
	339,995	**119,593**	**35.2%**
TOTAL OPERATING			
REVENUES	**(2,613,370)**	**(557,190)**	**21.3%**
EXPENSES	**12,669,925**	**2,820,297**	**22.3%**
NET GENERAL LEVY EXPENDITURE	**10,056,555**	**2,263,107**	**22.5%**

NOTES:

1 Includes administrative fees associated with tax certificates; NSF payments; account balance transfer fees; tax sale and sale of surplus assets.

2 Includes OCIF formula funding towards the Asset Management Coordinator role ($35,000).

3 Includes Dog and Kennel Licences ($49,855); Parking Fines ($3,250); Marriage Licences ($1,545); Property Standards Fees ($400); Lottery Licences ($1,313); Provincial Offences ($337).

4 Includes penalty and interest on overdue water accounts ($4,065) and taxes receivable ($41,172).

5 Includes YTD honorariums for Council Members.

6 Municipal Grant Program allocations were approved under Report COR 2021-046.

7 Includes direct and indirect staffing costs associated with the Office of the CAO.

8 Includes direct and indirect staffing costs associated with Information and Legislative Services.

9 Waterloo Region Municipal Insurance Pool Premiums are typically remitted in Q2. YTD expenditures represent claims under the Township's deductible limit ($10,000) and legal expenses, net of allocations to user-pay operations.

10 Includes direct and indirect staffing costs associated with Municipal Law Enforcement Officers and contracted services for Animal Control.

11 Includes direct and indirect staffing costs associated with crossing guards.

12 YTD expenditures includes maintenance of the voters list.

13 Includes direct and indirect staffing costs for Corporate Services net of cost allocations from user-pay divisions.

14 Includes direct and indirect staffing costs for IT Services. Expenditures also include support contracts and web service charges which are paid throughout the year.

15 Includes revenue from Fire Permits ($660); billable calls/activities ($6,217) and Boundary Service Agreement with Blandford-Blenheim ($5,580).

16 Includes direct and indirect staffing costs for Fire Services, including Practices, Fire Calls and other VFF activities.

17 Includes non-staffing related costs to maintain an effective Fire Services such as vehicle repairs and maintenance, clothing/PPE, dispatch fees and utilities.

18 Roads/Engineering Service Charges activities typically peaking during Q2/Q3.

19 Ontario Aggregate Resources Corporation (OARC) fees are based upon actual tonnage extracted from private pits within the Township from the preceding fiscal year. Fees are typically received in late Q3.

20 OMAFRA funding for Municipal Drainage Superintendent Services for 2022 typically billed in late Q4.

21 YTD costs reflect direct and indirect staffing costs for Public Works and Engineering Administration net of cost allocation to Water/Sanitary.

22 YTD costs reflect direct and indirect staffing costs for Road Operations excluding Winter Control.

23 Roads operating costs are impacted by seasonality. The majority of focus in Q1 is on Winter Control Operations.

24 Winter Control activities peak in Q1 and Q4. Any savings from the program at year end are transferred to the dedicated reserve fund to offset any overages from years of higher than average snowfall.

25 Majority of drainage works are typically billed by the drainage superintendent in late Q4.

26 YTD Street Light Hydro Costs reflect consumption in Q1.

27 Revenues include: Aquatics ($58,236); Ice Pads/Arena Floor ($179,716); Concession ($19,030); Programming ($3,913); Room/Field Rentals ($7,273); Rink Board Advertising ($17,142); Other ($4,209).

28 Includes a donation from the New Dundee Women's Institute towards the Bandshell Garden.

29 Revenues include: NH Arena/CC ($11,652); Baden ($14,623); Haysville ($2,075); Mannheim ($895); New Dundee ($76); New Hamburg Parks ($0); Petersburg ($0); St Agatha ($586); Other ($0). Activities typically peak in Q2/Q3.

30 Costs include direct and indirect staffing costs for Recreation Administration, Scheduling and Customer Service personnel.

31 Costs include direct and indirect, full-time and part-time, staffing costs for the Wilmot Recreation Complex.

32 Costs include Building/Grounds Maintenance, Utility Costs, Equipment Repairs and Maintenance at the WRC.

33 Costs include direct and indirect staffing costs for all Parks and Facilities staff excluding the WRC.

34 Costs include Building/Grounds Maintenance, Utility Costs, Equipment Repairs and Maintenance at parks and community centres.

35 Costs include Building/Grounds Maintenance, Utility Costs, Equipment Repairs and Maintenance at municipal facilities.

36 Castle Kilbride re-opened in late Q1. Revenue includes: Admission ($862); Giftshop ($68); Programs & Workshops ($510); Special Events ($0) and Other ($0).

37 Federal/Provincial Grants are received periodically throughout the year.

38 Costs include direct and indirect staffing costs for Castle Kilbride Administration.

39 Operating Expenses tend to peak in the last three quarters as the Castle opened in late Q1.

40 Majority of planning and business licencing revenues anticipated to occur over the next three (3) quarters.

41 Costs include direct and indirect staffing costs for Planning, net of cost allocations from Building Services.

42 YTD Expenditures include Waterloo Region Economic Development Corporation (WREDC) membership ($50,000) and Waterloo Region Tourism Marketing Corporation ($10,000).

TOWNSHIP OF WILMOT
2022 STATEMENT OF OPERATIONS (USER-PAY) AS OF MARCH 31, 2022 (UN-AUDITED)

	2022 Budget	2022 Actual	Variance %
WATER/SANITARY			
REVENUE			
Utility User Fees [1]	(6,381,810)	(725,556)	11.4%
Utilities Sales, Service Charges [2]	(59,390)	(4,852)	8.2%
	(6,441,200)	**(730,408)**	**11.3%**
EXPENSES			
Water/Sanitary Administration [3]	618,050	129,399	20.9%
Water/Sanitary Operating Expenses [4]	1,385,830	281,751	20.3%
Water Regional Charges [5]	1,517,000	212,658	14.0%
Sanitary Regional Charges [5]	1,854,830	314,474	17.0%
	5,375,710	**938,281**	**17.5%**
TRANSFER (TO)/FROM RESERVE FUNDS [6]	**(1,065,490)**	**207,874**	**-19.5%**
CEMETERY			
REVENUE			
Cemetery User Fees [7]	(80,300)	(8,029)	10.0%
Cemetery Investment Income [8]	(3,000)	-	0.0%
	(83,300)	**(8,029)**	**9.6%**
EXPENSES			
Cemetery Administration [9]	22,200	1,442	6.5%
Cemetery Operating Expenses [10]	58,170	18,524	31.8%
	80,370	**19,967**	**24.8%**
TRANSFER (TO)/FROM RESERVE FUNDS [11]	**(2,930)**	**11,938**	**N/A**

TOWNSHIP OF WILMOT (USER-PAY)
2022 STATEMENT OF OPERATIONS (USER-PAY) AS OF MARCH 31, 2022 (UN-AUDITED)

	2022 Budget	2022 Actual	Variance %
BUILDING			
REVENUE			
Building Permit Fees [12]	(671,500)	(41,640)	6.2%
	(671,500)	**(41,640)**	**6.2%**
EXPENSES			
Building Administration [13]	468,210	113,451	24.2%
Building Operating Expenses [14]	278,515	67,030	24.1%
	746,725	**180,481**	**24.2%**
TRANSFER (TO)/FROM RESERVE FUNDS [15]	**75,225**	**138,841**	**184.6%**

NOTES:

1 YTD fees represent January billing for New Hamburg residents and January/February billing for the rest of the Township.

2 Sales and Service Charges include Sale of Water Meters, Final Reading fees and other misc. fees.

3 YTD costs reflect direct and indirect staffing costs for Utilities.

4 Utilities operating expenses include allocation to General Levy, Contracted Services, Fuel, etc.

5 Reflects flows to/from Region of Waterloo for the months of January and February.

6 Transfers to/from reserve funds are completed as part of year end processing.

7 Cemetery User Fees include Burials, Sale of Plots, etc.

8 Investment income calculated in part of year end processing.

9 Costs reflect direct and indirect staffing costs for Cemetery Operations.

10 Cemetery Operating expenses include Grave Opening, Foundations, Buildings/Grounds Maintenance, Allocation to General Levy for administrative support.

11 Transfers to/from reserve funds are completed as part of year end processing.

12 YTD permit fees are outlined within the Building Statistics reporting from Development Services.

13 Includes direct and indirect staffing costs for Building Services Operations.

14 Includes operating expenses include allocation to General Levy, Contracted Services, Vehicle Repairs/Maintenance, etc.

15 Transfers to/from reserve funds are completed as part of year end processing.

INFORMATION AND LEGISLATIVE SERVICES
Staff Report

REPORT NO:	ILS-2022-15
TO:	Council
SUBMITTED BY:	Dawn Mittelholtz, Director of Information and Legislative Services / Municipal Clerk
PREPARED BY:	Dawn Mittelholtz, Director of Information and Legislative Services / Municipal Clerk
REVIEWED BY:	Sharon Chambers, CAO
DATE:	April 25, 2022
SUBJECT:	Return to In-person Council Meetings

RECOMMENDATION:

THAT Report No. ILS-2022-15 be endorsed.

SUMMARY:

As the response to the pandemic has lifted or loosened almost all restrictions, Council is being asked to endorse the return to in-person Council Meetings starting May 16, 2022.

BACKGROUND:

On March 17, 2020, the doors to the Administration Complex for the Township of Wilmot were closed in response to the global pandemic. These were unprecedented times that called for flexibility from Council, staff, and the public. Wilmot rose to the challenge and began switching to virtual or other means of providing service that minimized or removed in-person contact as much as possible to lessen the spread of the virus. This change also included how Council Meetings were conducted.

On March 19, 2020, the Province of Ontario passed Bill 187 to amend the *Municipal Act, 2001* (the Act), to permit municipal Councils to participate electronically in open and closed meetings during an emergency and still count towards quorum, if their Procedural By-law was amended to allow it. Electronic participation counting towards quorum was not previously allowed under the Act. Council held its first virtual meeting on March 25, 2020 and adopted the above noted Procedural By-law Amendments.

On July 21, 2020, Bill 197 was given Royal Assent to permit ongoing electronic participation counting towards quorum for both open and closed Council Meetings, again, if the Procedural By-law was amended to allow this. On October 5, 2020, Council approved those amendments to the Procedural By-law but required that the Chair be physically present at the meeting. Council has been meeting virtually ever since.

REPORT:

In the first quarter of 2022, the Province of Ontario has been steadily working towards lifting or loosening the provincial orders and recommendations that restricted Ontario businesses and the public in terms of gathering limits, physical distancing, facial mask requirements, and proof of vaccination requirements. The lifting of these restrictions is a welcome change for many while caution is continuing to be observed. Township staff have been monitoring and responding to the pandemic in coordination with municipal and other government agency partners across Waterloo Region under the guidance and advice of the Region of Waterloo Public Health Unit.

Returning to in-person Council Meetings was approached cautiously by staff to ensure the health, safety, and psychological comfort of all participants, that the technological solutions in place produced a high-quality product for viewers, and that accountability and transparency standards were upheld in concert with the Procedural By-law. The solution that staff have been implementing follows a two-phased approach.

Phase 1

Council, staff, and the public will return to the Council Chambers on May 16, 2022. Members of Township staff will continue to wear masks during in-person meetings with the option to remove their masks when speaking.

Council and the Corporate Leadership Team will resume sitting in their pre-pandemic seating arrangement. Although seating in the Council Chambers for members of the public will not be limited, chairs will be arranged to allow for physical distancing as comfort levels in engaging with those outside of the household increases while remaining cognizant of the ongoing pandemic. Additional chairs will be set out if required. Any member of Council, staff, or the public who are experiencing COVID-19 like symptoms are asked to not attend in-person meetings.

Council Meetings will continue to be live streamed on YouTube with recorded versions accessible via the Township's Website. Staff have installed the necessary infrastructure to ensure quality audio and video is broadcasted to anyone viewing or listening to the meeting live or recorded. Electronic participation will not be combined with in-person participation (hybrid meetings) during this phase, meaning delegations will only have the option of addressing Council in-person or providing written submissions to the Clerk. Staff will be evaluating the live stream and recorded meetings to further refine the end product and ensure existing staff resources can accommodate both phases of this project.

Phase 2

Once Phase 1 is complete, staff will move towards introducing hybrid meetings. Hybrid meetings will allow for both two-way communication between electronic participants (via Zoom) and those attending in-person. It is important to note that this phase requires additional resources to manage various aspects such as delegation management, technological support for participants and overall monitoring of the production. Staff intend on having this capability introduced by the end of Q3 2022. Phase 2 will include recommendations for the conduct of Committee Meetings relative to electronic and in-person participation.

ALIGNMENT WITH THE TOWNSHIP OF WILMOT STRATEGIC PLAN:

Returning to in-person Council Meetings, while planning for hybrid meetings meets the Strategic Plan goals of:

- Quality of Life – Accessibility and Inclusivity, Health and Wellbeing
- Community Engagement – Belonging, Support for Community Groups / Volunteers / Youth
- Responsible Governance – Active Communication, Fiscal Responsibility, Infrastructure Investments

FINANCIAL CONSIDERATIONS:

Costs associated with the implementation will be sourced from the existing IT Operating and Annual Hardware/Software Capital Budget. Any significant deviations to meet the aforementioned obligations will be noted in future quarterly financial reports.

Given the staffing resource pressures of live streaming, on-going impacts will be considered in the 2023 operating budget process.

ATTACHMENTS:

None

PARKS, FACILITIES AND RECREATION SERVICES

Staff Report

REPORT NO:	PFRS 2022-015
TO:	Council
SUBMITTED BY:	Sandy Jackson, Director Parks, Facilities and Recreation Services
PREPARED BY:	Sandy Jackson, Director Parks, Facilities and Recreation Services Harold O'Krafka, Director of Development Services Rod Leeson, Fire Chief
REVIEWED BY:	Sharon Chambers, CAO
DATE:	April 25, 2022
SUBJECT:	Third Ice Pad Location Follow Up Report

RECOMMENDATION:

THAT Report PFRS 2022-015, Third Ice Pad Location Follow Up Report be received for information purposes.

SUMMARY:

Staff presented report PFRS 2022-09, Third Ice Pad and Parks Operations Centre Final Report to Council on February 28, 2022, seeking support for hiring a Design / Bid / Build team for the third ice pad to be constructed adjoined to the Wilmot Recreation Complex (WRC).

Concerns were raised during the Council meeting regarding the proximity of the WRC to the Nachurs Alpine Solutions fertilizer manufacturing facility located north-west of the WRC. As a result, an Amendment to the report Recommendation was approved as follows:

> THAT Report PFRS 2022-09 Third Ice Pad and Parks Operations Centre Final Report, be received for information purposes; and

THAT staff be directed to proceed with plans for hiring a Design / Bid / Build team for the Third Ice Pad project located at the Wilmot Recreation Complex (WRC) as outlined in the 2022 Capital Budget; and

THAT staff be directed to include funds in a future budget for securing a new site and capital funds to construct a Parks Operations Centre.

And

THAT the motion be amended to include:
Pending a staff report advising on safety concerns related to the proximity to the Nachurs Alpine facility.

This report provides a summary of research conducted by Township staff to advise on safety concerns regarding the proximity of Nachurs Alpine.

BACKGROUND:

The WRC twin pad arena was constructed in 2007 followed by the Aquatic Centre in 2013. Recent staff reports identified and confirmed the need for a third ice pad, and Staff report PFRS 2021-018 recommended the WRC as the preferred site, which was further supported and confirmed in staff report PFRS 2021-019 based on public consultation results from an online survey.

Staff report PFRS 2022-09, Third Arena and Parks Operations Site Final Report, included the concept design shown below, for adding a third rink at the WRC location by expanding the building south-westerly into the entrance lane and parking lot to align the proposed third rink with the Schout Performance Rink. Research conducted by Monteith Brown Planning Consultants Ltd. determined this location to be the most cost effective and efficient option when compared to renovating the former New Hamburg Arena location or a developing a single pad arena on a new site.

At the February 28, 2022, Council meeting, concerns were raised regarding the proximity of the WRC and the proposed new third ice pad to the Nachurs Alpine Solutions facility on Nafziger Road. In particular, Council requested information regarding a 1000 m area of concern surrounding the Nachurs Alpine facility. Staff were requested by Council to review safety concerns and report back with information prior to proceeding with the Design Bid Build RFP.

Concept Design Developed by Monteith Brown Planning Consultants Ltd.

REPORT:

Staff commenced research regarding the proximity of Nachurs Alpine Solutions facility for the purposes of this report by seeking information from a number of experts including Nachurs Alpine staff. Staff also reviewed all information on file from the original WRC construction projects, both phase one – arena construction, and phase two – aquatic centre construction. No information was found in staff records regarding concerns about the proximity of the Nachurs Alpine facility.

On March 14, 2022, Nachurs Alpine Solutions provided a statement to Council regarding their operations and clarifying the emergency planning, communications, and training programs they have in place to ensure public safety. This correspondence is attached as Appendix A.

In addition, staff spoke with a number of experts to determine if the Planning Act R.S.O. 1990, c. P. 13, includes restrictions for considering building the third ice pad at the current location of 1291 Nafziger Road as it relates to the proximity of Nachurs Alpine Solutions.

The following paragraphs outline the results of this research and consultation:

WRC Architect Firm:

Staff spoke with Mr. Guy Bellehumeur from GB Architect Inc. who was the lead Architect on the WRC design. Mr. Bellehumeur indicated that during the design process, no issues were identified with respect to the proximity of Nachurs Alpine, and the design team were not required to complete an investigation of any sort related to this topic. Mr. Bellehumeur

indicated that he worked with Jackson Barill Management Inc. on this project, and that this was never raised as a concern in any conversations with the Project Manager. It is staff's understanding that Jackson Barill is no longer operating as a business due to retirement, therefore, staff were unable to follow up further on the original construction.

Township Director of Development Services

In the Province of Ontario, the D Series of the Land Use Compatibility Guideline governs environmental considerations and requirements for industrial use, sensitive lands, sewage and water service, and private wells. Mr. Harold O'Krafka, MCIP, RPP Director of Development Services, reviewed the D-6 guideline specific to the governance of sensitive uses and their proximity to Industrial operations.

Mr. O'Krafka identified Nachurs Alpine Solutions as a Class 2 (two) Industry with a 300m sphere of influence. The existing WRC arenas and the proposed third ice pad are 650m from the Nachurs Alpine operation. If the facility were within the 300m sphere of influence additional site analysis would be required under the Guideline. Since this is not the case, no additional analysis was required to construct the original WRC building or build the third rink.

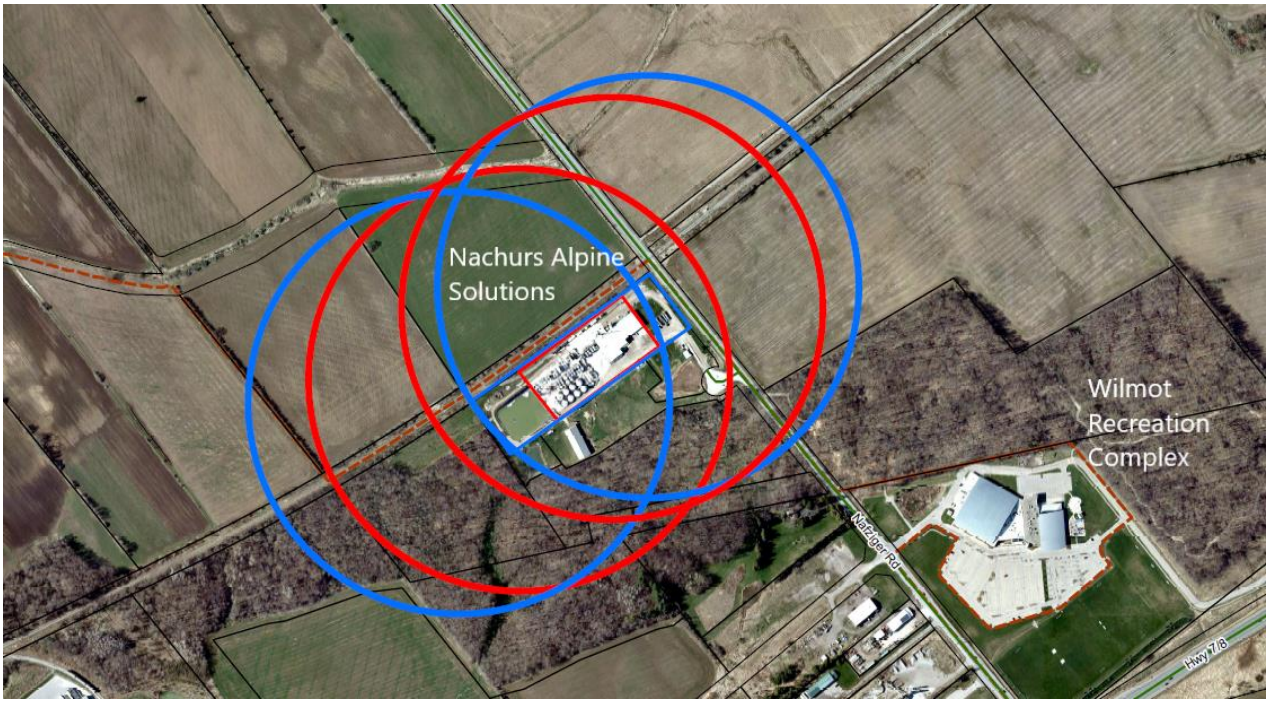

Nachurs Alpine Solutions 300m Sphere of Influence

Region of Waterloo Planning Department:

Staff also reached out to Ms. Amanda Kutler, RPP, MCIP, Manager of Development Planning for the Region of Waterloo. Ms. Kutler indicated in e-mail correspondence that Mr. O'Krafka's analysis was accurate and was supported by the Regional Planning Department.

Township Fire Chief

Chief Rod Leeson provided information related to the chemicals and safety measures in place at Nachurs Alpine Solutions during the Council meeting and in a follow up e-mail to members of Council (attached as Appendix B). In his e-mail summary, Chief Leeson outlined the chemical properties of Anhydrous Ammonia which is used by Nachurs Alpine to manufacture fertilizer products. The information indicates that Anhydrous Ammonia is not considered a risk for explosion due to its chemical properties. The email also referenced the use of Anhydrous Ammonia which is stored and used daily to build and maintain ice at the WRC and arenas and food production plants around the world.

Other Safety Considerations:

Although the proximity of Nachurs Alpine Solutions does not require further site analysis according to the Land Use Compatibility Guideline, staff met with Ms. Carrie Sciarra, Nachurs Alpine Plant Manager to determine if there are other safety measures that can be undertaken regarding the WRC. Historically Nachurs Alpine has provided emergency manuals to WRC staff annually. In addition to this, Ms. Sciarra offered to meet with operational staff to review the safety protocols and WRC Emergency Plan that is currently in place and provide training to WRC staff as it relates to the Nachurs Alpine operations.

In addition, and out of an abundance of caution, design considerations will be undertaken for the third ice pad to reduce the potential for intaking air on the north-west facing side of the new arena structure.

As a result of the research, staff are recommending that Council receive this report and that staff proceed with developing a Design Bid Build RFP for the construction of the third rink at the WRC.

ALIGNMENT WITH THE TOWNSHIP OF WILMOT STRATEGIC PLAN:

The development of a third ice pad aligns with the Goal of Community Engagement by involving WRC user groups and general public in the decision to select the WRC as the preferred location for a third ice pad.

Reviewing the safety of patrons who use the facility supports the Goals of Quality of Life and Responsible Governance.

ACTIONS TOWARDS UNITED NATIONS SUSTAINABLE DEVELOPMENT GOALS:

Goal 3: Good Health and Well-Being

FINANCIAL CONSIDERATIONS:

There are no financial considerations related to this report.

ATTACHMENTS:

Appendix A: Press statement issued to Members of Council from Nachurs Alpine Solutions
Appendix B: Email from Chief Rod Leeson to Members of Council re: Nachurs Alpine Solutions

From: Megan Silcott
Sent: Monday, March 14, 2022 1:48 PM
To: rod.leeson@wilmot.ca
Subject: RE: Introduction Email

Good Afternoon Rod,
Attached is the NAS response to be read tonight at the Wilmot Township council meeting. Please let me know if you have any questions.

Thank you!

Megan Silcott
EHS Manager
Nachurs Alpine Solutions
421 Leader St.
Marion, OH 43302
Phone: (740) 382-5701 ext. 222
Mobile: (740) 751-5301
msilcott@nachurs-alpine.com
www.nachurs-alpine.com

- Nachurs Alpine Solutions was founded in 1946 and is a North American specialty liquids chemical manufacturer.
- Built on quality, integrity, and innovation, we pioneer precision liquid fertilizer formulated to meet the nutritional demands of crops and growing conditions on both sides of the border since 1946.
- The New Hamburg Plant contains quantities of products which necessitates the development of an Environmental Emergency Plan as per the *Canadian Environmental Protection Act 1999.*
- In the event of an unplanned release of any flammable liquid in the facility it may be necessary to evacuate surrounding companies and facilities.

- The Nachurs Alpine Solutions Plant has several hazardous products that can cause an environmental impact to the surrounding area. There are four products, none of which that are explosives, that meet the threshold requirements for developing an Environmental Emergency E2 plan.
- In an effort to inform the public of the potential hazards Nachurs Alpine Solutions has reached out to neighbours in close proximity and collected contact information. During this process neighbours were instructed on what to do in the event of an emergency.
- Nachurs Alpine Solutions will continually communicate with neighbours to provide updates during and after an incident.

Emergency Communication: Isolation zones during an environmental release will be established by the Fire Department who will reference their standard operating guidelines, Emergency Response Guidebook (ERG) and the Emergency Planning Zone.

There are potentially two outcomes that can occur that affect the general public. The circumstances of the event will dictate the type of instructions given to the public.

- **Shelter-in-place** – It may be generally safer for the general public or neighbouring facilities to shelter-in-place to avoid exposure to a leak depending on the quantity and other factors, such as the prevailing wind.
- **Evacuate** – Upon the direction of local emergency services, it may be necessary to evacuate to a safe distance. Instructions will be provided to public the regarding the direction of the evacuation and any other pertinent information.

Once the incident is mitigated and deemed safe, the public will be instructed to return to their homes or businesses. Communication with the public can be accomplished in several different ways depending on the direction of the local emergency services department

From: Rod Leeson
To: Cheryl Gordijk; Sharon Chambers
Cc: Julie Truong; Council; Corporate Leadership Team; Carrie Sciarra
Subject: RE: Minutes - February 28 meeting
Date: Monday, March 14, 2022 12:30:43 PM

Good afternoon Councillor Gordijk,

Nachurs Alpine is a fertilizer manufacturer not a chemical plant which would imply they manufacture chemicals on site. Nachurs Alpine manufactures "hot mix liquid fertilizers" using various ingredients that include some chemicals, serving the vast agricultural industry in the Township of Wilmot and beyond which is a vital asset to our farming community.

Anhydrous Ammonia is kept as a liquid under pressure in cylinders, trucks, and rail cars. When it is exposed to ambient pressure (air) it turns into a corrosive gas (vapour). It's boiling point is -33 C which would cause a burn to your skin without appropriate protection. Ammonia is an inhalation hazard at low concentrations and is soluble with water. It is colourless with a specific gravity of .597 (means it is lighter than ambient air and rises). Depending on humidity and wind velocity, ammonia will move based on moisture content. For example, it may become heavier than ambient air if it's exposed to high humidity. This is the reason water is used to control ammonia releases. Should something mechanically fail, water deluge systems are used to contain the ammonia spill and captured into a special containment area for recovery by an approved method. Anhydrous Ammonia, either liquid or gas, is a strong irritant to skin, eyes, respiratory tract. Time weighted average exposure value is 25 ppm which means a worker can safely work in these conditions for an 8 hour period. Anhydrous Ammonia has an extremely pungent odour and is easily identified to allow people to move away to safety.

Anhydrous Ammonia **is not** considered an explosion hazard due to its chemical properties. Ammonia gas has an explosive range of 16% (LEL - Lower Explosive Limit) to 25% (UEL – Upper Explosive Limit) by volume to air. This means you must have 16% LEL to 25% UEL ammonia to air ratio with a suitable source of ignition before you reach a flammable or explosive condition. This puts anhydrous ammonia outside of the considered flammability risks that other flammable gases require and **is not** considered explosive. This information supports that the gas must be in a confined space and meet the LEL and UEL with a suitable source of ignition before the vapour can be ignited and cause an explosion. Anhydrous Ammonia is not typically stored in these conditions where leaks into a confined space would be common. A good comparison example would be natural gas that has a specific gravity of .6 and an explosive range of 5% LEL to 15% UEL to air ratio, widely used around the world for a variety of purposes such as home heating and considered very safe in our day to day lives. Nachurs Alpine does not store any anhydrous ammonia inside any structures where gases may form in sufficient concentrations and exposed to a suitable source of ignition. All anhydrous ammonia is stored outside in approved vessels or cylinders with several safety features and trained staff to deal with any emergencies that may arise. Nachurs Alpine is highly regulated and required

to meet a long list of mandatory safety requirements to protect the public, the environment, and their workers. Nachurs Alpine is legislatively required by Environment and Climate Change Canada to conduct an E2 plan which is known as an Environmental Emergency plan. E2 plans are comprehensive and include regular reviews, updates, annual drills and exercises for staff. Local Emergency services are included in planning, drills and exercises.

In the Province of Ontario the D Series guidelines govern environmental considerations and requirements for industrial land use, sensitive lands, sewage and water services, and private wells. In particular the D-6 guideline governs the location of sensitive uses and their proximity to Industrial operations. Nachurs Alpine is classified as a Class 2 Industry with a 300m sphere of influence. The existing arenas and the proposed third ice pad are 650m from the Nachurs Alpine operation and therefore no additional siting analysis is required.
Nachurs Alpine will be doing a media release and presentation to council (TBA) to ensure proper and accurate information is being shared publicly specific to their operations.
I should also point out that Anhydrous Ammonia is widely used a coolant around the world, safely every day. One example is a food producer with plants in a residential neighborhood that has 10's of thousands of gallons of Anhydrous Ammonia used for large walk in/drive in freezers. The WRC uses Anhydrous Ammonia as a coolant to chill the ice surface.

ROD LEESON, FPO, CFEI, CCFI-C, CEMC
Fire Chief
Fire Department, Emergency Management |
Township of Wilmot
www.wilmot.ca
60 Snyder's Road West, Baden, ON N3A 1A1

t. 519-634-8519 Extension 9247
m. 519-778-0453
toll-free. 800-469-5576
TTY. 866-620-2994

Stay connected with Wilmot on
Twitter and Facebook

Nachurs Alpine Solutions

1356 Nafziger Rd
New Hamburg, ON

About Us

- Nachurs Alpine Solutions was founded in 1946 and is a North American specialty liquids chemical manufacturer.

- Built on quality, integrity, and innovation, we pioneer precision liquid fertilizer formulated to meet the nutritional demands of crops and growing conditions on both sides of the border since 1946.

Our Products

- While some of the products stored at the New Hamburg Plant are considered hazardous under the Canadian Environmental Protection Act, none of those products are explosive, and we have developed an E2 plan in compliance with the CEPA to chart a course of action in case of an accident that might cause a release.

- As a part of developing that E2 plan, we have already worked with neighbors to collect relevant contact information and let them know what to do in case this kind of emergency develops.

Preventative Measures

- In addition with complying with the law, we have taken affirmative steps in collaboration with the community to consider how to handle the type of emergency

- Nachurs Alpine has high safety and environmental standards and works closely with the local fire Dept in conducting regular exercises to maintain response times.

- The ***low risk*** of having a chemical release is due to the successful Environmental, Health and Safety programs, policies and procedures that are followed daily at the location.

- At this time, the facility has not had a significant event that affected the public's safety.

Economic Value

- Over half of the ALPINE employees are local.

- Shop local
  - Order lunches from local restaurants
  - Order all office supplies from local businesses
  - Utilize local entertainment

- Support local Charities/Social Groups/Recreations
  - Donate to 4-H clubs, Christmas food donations, participate in food drives, donate to local school playground improvements etc.

Importance to the Agricultural Community

- The ALPINE business provided over 58 Million Liters of liquid fertilizer to the local community and surrounding areas in 2021.

Conclusion

- As you can see, Nachurs Alpine Solutions is committed to the Environmental, Health and Safety of our employees and our community.

Thank you!

PUBLIC WORKS AND ENGINEERING

Staff Report

REPORT NO:	PWE 2022-19
TO:	Council
SUBMITTED BY:	Jeff Molenhuis, P.Eng., Director of Public Works and Engineering
PREPARED BY:	Bryan Bishop C.E.T. Manager of Engineering
REVIEWED BY:	Sharon Chambers, CAO
DATE:	April 25, 2022
SUBJECT:	Infrastructure Standards and Specifications Manual for Public Works and Engineering

---

RECOMMENDATION:

THAT Report PWE 2022-19 Infrastructure Standards and Specifications (ISS) Manual for Public Works and Engineering be received for information; and further,

THAT the Infrastructure Standards and Specifications manual as detailed in Report PWE 2022-19, dated April 25, 2022 be endorsed; and further,

THAT the following actions with respect to the Infrastructure Standards and Specifications manual be taken:

i) Staff be directed to utilize the Infrastructure Standards and Specifications manual in the review of municipal consents, development engineering applications and approval and design of capital infrastructure projects.
ii) Staff are provided authority to update the Infrastructure Standards and Specifications manual regularly to ensure it remains current with standards and Township requirements.

SUMMARY:

This report outlines the comprehensive update of the Township's core Infrastructure Specifications and Standards document. The update included substantial collaboration and partnership with the Township of Woolwich, as well as industry consultation on the proposed updates to align with current regulations and best practices in engineering and operations.

BACKGROUND:

The Public Works and Engineering Department has a core mandate of infrastructure development, rehabilitation and maintenance. Development and municipal consent activity requires the balance of private interest for infrastructure approvals and process requirements with the Township's interest in promoting quality long term infrastructure and growth within the Township. A critical aspect of development related infrastructure approvals is establishing municipal standards and specifications to provide for confidence in the approval process. The engineering review process continually aims to better address the potential for competing interests of development activity with Township interests in providing high quality development, municipal consent approvals and capital infrastructure projects for the life cycle of the municipal assets.

Municipalities recognize the benefit of having standardized requirements for municipal consents, development engineering and capital infrastructure projects. Manuals of this nature provide staff and consultants with Township specific requirements to be used in addition to other regulations and requirements, such as Federal and Provincial legislation, the Region of Waterloo Design Guidelines and Supplemental Specifications for Municipal Services (DGSSMS) and Ontario Provincial Standards (OPS). Standardizing municipal requirements condenses the review time, brings consistency and confidence to the development process, which provides for better opportunities and positions to ensure higher quality constructed infrastructure and reduced long term maintenance requirements.

Considering efficiencies in services, the Township partnered with the Township of Woolwich to create standard document language that could be used by both municipalities in their own separate manuals. The manual aimed to include standard engineering development design requirements, infrastructure standards and useful links to submission and design requirements. Staff also reviewed other similar manuals created by area municipalities to ensure requirements in the Wilmot manual were in line with typical standards. Federal, Provincial and Regional requirements were considered to ensure no conflicts would be created. Partnering with Woolwich allowed for efficiencies in administration, consultation and overall process of developing this critical document.

Starting in 2020, draft versions of the document were circulated in three phases to industry stakeholders for comment, feedback and discussion. The manual was also circulated to internal Township staff for their comments and department inclusions. Many comments were received and considered during the creation of the final draft document that is attached to this report.

REPORT:

Included in the Manual

The manual includes engineering requirements for;

- Core municipal infrastructure specifications;
- Municipal Consent; and
- Development requirements including;
    - Engineering drawing submissions
    - road design,
    - underground services,
    - transportation impact studies
    - hydrogeological impact studies
    - lot grading,
    - sediment and erosion control,
    - stormwater management,
    - landscaping, and
    - fees and security.

The manual references standard drawings and specifications included in the DGSSMS and the OPS. There are some Township specific requirements that need greater oversight than what is offered in DGSSMS and OPS. Township specific standards have also been referenced in the manual.

The manual recognizes that there may be cases where specific issues prevent the standard design requirements from being followed. To this end, provisions for acceptance of design elements outside of the requirements included in the manual can be requested and considered by senior staff. Through understanding of how similar documents are used in area municipalities, such as Kitchener, Waterloo, Cambridge and Stratford, staff are confident that most development, municipal consent and infrastructure projects will be able to follow the requirements outlined in the manual.

A number of policies were included in the creation of the document. Below are a few of the policies established

- Water meter pit specifications;
- Street lighting;
- Topsoil thicknesses;
- Inflow and Infiltration performance testing;
- Stormwater management monitoring and securities;
- Public Works and Engineering fee basis; and
- Municipal consent process and specifications.

The ISS manual generally relates to public infrastructure which separates these components from private property building requirements, which generally fall under the jurisdiction of the Ontario Building Code. The scope of this document reflects the public infrastructure realm, and as such the evolving green building standards and processes for private building structures are not included in this document. In addition, Low Impact Development (LID) standards associated with development activity are not included in this document for two primary reasons. First, the inclusion of LID needs to consider a sub-watershed viewpoint as many LID activities are relevant to watershed characteristics. Second, the province is currently consulting the public on LID and green infrastructure standards. The intention is to utilize these standards in future manual updates; and prior to that time use current best practices to implement into development activity and capital works.

Implementing the Manual

Following its endorsement by Council, the manual will be accessible to the public through the Township's website. Information on the manual, and its use will also be included to ensure users are interpreting the manual as intended. Staff will be available for questions and consultation.

Updates to the Manual

Staff will review the Infrastructure Standards and Specifications manual regularly to ensure it meets the needs of the Township, while considering industry needs and changing standards. Notices of updates will be provided to the industry and general public, as well as tracked in the manual document to ensure transparency and consultation take place with respect to the document.

Interdepartmental Impacts:

Input from various Township departments was received in the creation of the manual, including Development Services, Parks Facilities and Recreation and Fire Services. The manual strives to provide up to date guidance to Township staff working with development approvals, municipal consents and capital infrastructure projects.

Ongoing analysis of development review and infrastructure design processes are necessary to address specific challenges and provide guidance to the development and construction community. It is important to balance these challenges with the interest of the Township to promote quality development and future maintenance of new infrastructure. The addition of the ISS will support corporate efforts to provide adequate customer service to the industry, and to achieve the broader objectives of the Township's Strategic Plan.

ALIGNMENT WITH THE TOWNSHIP OF WILMOT STRATEGIC PLAN:

This initiative supports the goals and strategies of enhancing *Responsible Governance* through Fiscal Responsibility, Active Communications, Infrastructure Investments, Service Reviews and Master Planning. It also supports *Economic Prosperity* through smart growth. Finally, this

initiative supports Quality of Life through Accessibility and Inclusivity, Active Transportation and Transit.

ACTIONS TOWARDS UNITED NATIONS SUSTAINABLE DEVELOPMENT GOALS:

- Goal 9: Industry, Innovation, and Infrastructure
- Goal 11: Sustainable Cities and Communities

FINANCIAL CONSIDERATIONS:

Ongoing review and updates to the Infrastructure Standards and Specifications manual are expected to have minimal impact on the Public Works and Engineering Services budgets.

ATTACHMENTS:

Attachment A – Infrastructure Standards and Specifications - DRAFT
Attachment B – Appendix
Attachment C – Standard Drawing Details

DRAFT – NOT FOR DISTRIBUTION

TOWNSHIP OF Wilmot

INFRASTRUCTURE STANDARDS AND SPECIFICATIONS

Revision Information Sheet

The following table indicates all revisions including any additions, deletions, and modificiations to this manual subsequemt to its issuance April 25th, 2022. Revisions to these standards are subject to the approval of the Township. A written request to change or revise the standards may be submitted to thw Township of Wilmot for review.

Rev. No.	Date (DD/MM/YY)	Section No.	Revision Details

Table of Contents

Section 1 – General

1.1 Introduction

Purpose

The prosperity of the *Township* depends upon long-term planning for strong and sustainable communities. This includes mitigating environmental impacts, providing quality infrastructure and identifying full life cycle infrastructure costs. The Township of Wilmot Infrastructure Standards and Specifications has been prepared as a reference guide to assist with *Capital Project*s, *Municipal Consent*, *Municipal Drains* and *Land Development* applications including but not limited to: general lot grading, consents / severances / zone change, infill *Development*, Site Plans, Condominiums and Subdivision applications. This document outlines policies, procedures and standards governing the engineering / infrastructure review, inspection and *Acceptance* process.

The Infrastructure Standards and Specifications includes design criteria and Best Management Practices specific to the *Township* to provide a general overview of the Engineering Review, *Acceptance* and Maintenance Process; however, it is not intended to be a comprehensive document. The intention of this document is to provide general design criteria for the *Engineer* / Designer for completion of the grading, servicing, storm water management, road design, traffic studies, hydrogeology, erosion control, minimum testing requirements, *lands*caping etc. to allow for the *Township* to provide a more efficient review and *Acceptance*.

The Professional Engineer is solely responsible for the “practice of professional engineering” as defined in Section 1 of the PEO Act: means any act of planning, designing, composing, evaluating, advising, reporting, directing or supervising that requires the application of engineering principles and concerns the safeguarding of life, health, property, economic interests, the public welfare or the environment, or the managing of any such act.

Development infrastructure activity, *Municipal Consent*s, *Municipal Drains* and Capital engineering design projects are to be prepared in a manner that meets the design criteria contained in this document. This Infrastructure Standards and Specifications Manual will be periodically updated to include revisions where required. Design submissions will be reviewed by Public Works and Engineering staff.

The *Consultant* / Applicant is to perform all professional services in accordance with the standard of care customarily observed by professional consulting firms performing similar services. The standard of care will include adherence to all applicable published standards of the profession and laws, regulations, by-laws, building codes and governmental rules and requests. A complete and thorough design submission that applies these design criteria as well as other legislative, reference documents, etc. will ensure a more efficient review process.

It is noted that each engineering submission is unique and will be reviewed based on its own merit, including evolving operational practices, legislative requirements and additional items that may be required to address site specifics for any given project. Special circumstances may require items over and above these design standards. The *Township* Public Works and Engineering Department reserves the right to apply discretion in the interpretation of the enclosed design criteria, and require the use of other applicable design guidelines, best management practices, operational / utilities practices and good engineering judgement when reviewing each project in order to protect the best interest of the corporation and the general public. Current legislation shall be followed at all times.

This document is an official Public Works and Engineering Policy document. The Infrastructure Standards and Specifications is to be read in conjunction with various other *Township* master planning documents, by-laws, guidelines and policies.

The *Township* has adopted the "Ontario Provincial Standard Drawings and Specifications MUNI (OPSS, OPSD)", "Region of Waterloo and Area Municipalities Design Guidelines (DGSSMS)" and the Township of Wilmot Standard Specifications (TWSS) except where amended as indicated in this Document.

Acknowledgements

The Infrastructure Standards and Specifications has been prepared by the *Township* in consultation with industry representatives, agencies, professionals and utility corporations. Public Works and Engineering wish to thank the following for their comment and input into the preparation and update of this document:

Township of Wilmot
Township of Woolwich
GHD Limited
Salvini Consulting Inc
Hydrogeology Consulting Services
City of Kitchener
City of Waterloo
Waterloo Region Homebuilder's Association
Conestoga Heavy Construction Association
Region of Waterloo
Consulting *Engineer*s of Ontario
Meritech Engineering
Stantec Consulting
The Walterfedy Partnership

Updates

Periodic updates of this document will be completed to address revised information, as applicable. This document is posted on the *Township* website and it is the responsibility of the user to obtain the latest version available. Comments and questions may be forwarded by email to infrastructuremanual@wilmot.ca.

General

The *Township*'s Public Works and Engineering Department is responsible for infrastructure review and *Acceptance*, permits and operations / maintenance for the following:

- *Municipal Drains*
- *Municipal Consents*
- *Development* Infrastructure
- *Capital Projects*
- Infrastructure Asset Management
- Corridor Management

This department is structured into specific administrative divisions. Table 0-1 (below) lists each division and its corresponding function with respect to the infrastructure review, *Acceptance*, permits, inspections and maintenance responsibilities.

Table 0-1: Public Works and Engineering Department

Division	Key Roles & Service Deliverables
Engineering Services	• *Capital Projects* • Watermain Form 1 review, sign off and *Acceptance* • Right of Way Work Permits • *Municipal Drain* review and *Acceptance* • General grading review and *Acceptance* (Additions, Severances, Pool permits etc.) • Infill lot engineering. Landscape Review in the Right of Way • Site Plan Engineering. Landscape Review within the Right of Way • Subdivision Engineering and Landscape Review in the Right of Way, SWMF • Field Inspection Services • Special Servicing *Agreements* • *Municipal Consents*

	• *Municipal Consent Agreement*s • Transportation Engineering review and *Acceptance (on street parking standards, speed review, bylaw updates, etc)* • Transportation Operations • Infrastructure Asset Management • Right of Way Encroachment *Agreement*
Public Works	• Storm Sewer Operations and Maintenance • SWMF maintenance • Road Maintenance and Construction within the Municipal Right of Way • Water Operations • Water Service Programs • Sanitary Sewer and Pumping Station Operations and Maintenance • Sidewalk & MUT Clearing • Locates • Tree trimming / removal

Applicable Legislation

The Divisions in Infrastructure Services and *Development* Services conduct work under the authority or direction of various pieces of legislation listed below but not limited to:

- Environmental Protection Act
- Environmental Assessment Act
- Species at Risk Act
- Endangered Species Act
- Invasive Species Act
- Forestry Act
- Professional *Engineer*s Act
- Safe Drinking Water Act
- Clean Water Act
- Ontario Water Resources Act
- Accessibility for Ontarians with Disabilities Act (AODA)
- Municipal Act
- Drainage Act
- Infrastructure for Jobs and Prosperity Act 2015
- Broader Public Sector Accountability Act
- Ontario Underground Infrastructure Notification System Act
- Occupational Health and Safety Act
- Public Service Works on Highways Act

- Construction Act
- Highway Traffic Act
- Telecommunications Act
- Canadian Transportation Act and Rail Safety Act
- Planning Act
- Ontario Building Code
- Applicable By-laws of the Township of Wilmot and the Regional Municipality of Waterloo

Applicable Township By-Laws

In addition to applicable provincial statutes related to development, environmental protection and public utilities etc.. Various by-laws govern the engineering and development process in the *Township*.

Relevant by-laws are available online at the Township of Wilmot and Region of Waterloo website. It is the applicants' responsibility to ensure that the most recent version of the by-law is used.

Disclaimer

The Township of Wilmot has supplied this manual with the express understanding that the *Township* shall not be liable in any manner whatsoever to any person, corporation or organization for damages, injuries or costs resulting from the use of the information supplied. The Township of Wilmot reserves the right to amend, alter or accept revisions to this manual at any time without further notice. It is the user's responsibility to check the Township of Wilmot website for the current version of this manual.

Through the Township supplying drawings, reports, maps, etc the Township of Wilmot has no responsibility for this data supplied. Such data is provided for convenience only and the recipient accepts full responsibility for verifying the accuracy and completeness of the data. Nothing herein shall reduce or diminish the Township's ownership of or copyright in the data or its compilation or arrangement. BY ITS ACCEPTANCE OF THE DATA, the recipient hereby FULLY and IRREVOCABLY accepts the terms herein and forever RELEASES the Township, its Council, officers, employees, consultants, and agents FROM ANY AND ALL CLAIMS arising from the content or provision of the data.

1.2 Definitions

"**Acceptance**" shall mean following a technical review, the *Township* accepts private and public infrastructure as being designed to the accepted standards as designed by a Professional Engineer for the application of engineering principles that requires the safeguarding of life, health, property, economic interests, the public welfare or the environment, or the managing of any such act.

"***Agreement***" shall mean the Subdivision, Site Plan, Municipal Access, Servicing or Consent *Agreement* including all schedules attached.

"***Assumption***" shall mean following *Acceptance* and construction, the *Township* assumes the constructed infrastructure (Township utilities, stormwater management facilities, Parks, right of ways, etc) as municipal property. (may include a conditional *Maintenance Period*)

"***Capital Project***" shall mean a new construction, expansion, renovation or replacement project to help maintain or improve a *Township* asset.

"***Contractor***" shall mean a person, partnership, or corporation who contract to undertake the execution of work commissioned by the *Township* or a *Subdivider* / *Developer* to install or maintain infrastructure or assets.

"***Consultant***" shall mean Architect or *Engineer* or *Landscape Architect* or Geoscientist who is licensed to practice in Ontario in their appropriate discipline and are acceptable to the *Township*.

"***Developer***" shall mean the *Owner* or party specifically named in the *Development Agreement* or in a Subdivision *Agreement*.

"***Development***" shall mean the *Lands* on which the Subdivision, Site Plan or Consent are proposed.

"***Easement***" shall mean a right of use over the property of another.

"***Engineer***" shall mean a Professional Engineer licensed and in good standing with the Professional Engineers Association of Ontario, who holds a Certificate of Authorization for municipal engineering applications, and has relevant experience and training in their discipline. The Engineer may be employed by a consulting firm, or consist of multiple Engineers responsible for their specific expertise related to the design of the *Development*.

"***Fee***" shall mean the costs related to administering and enforcing the conditions of the *Agreement*, as set out in the *Agreement* and in accordance with the current Fees and Charges By-law adopted by the *Township.*

"***Inspector***" shall mean the person(s) authorized and supplied by the *Township* or the Consultant / *Subdivider* / *Developer* to ensure that the installation and construction of the project is executed according to the accepted design and in a good workmanlike manner according to Federal, Provincial, Regional, *Township* standards and standard duty of care.

"***Land***" shall mean these *Lands* described in the *Agreement*, and includes all *Easement* rights and obligations granted in connection with the *Agreement.*

"***Landscape Architect***" shall mean a Professional *Landscape Architect* duly qualified and a member in good standing of the Ontario Association of *Landscape Architect*s.

"***Maintenance Period***" shall mean the required *Maintenance Period* at the discretion of the *Township*, before *Assumption* of the Subdivision or *Acceptance* of the Site Plan, Capital Project or Consent *Agreement Works*.

"***Municipal Consent***" shall mean Municipal authorization for a company to occupy a specific location within the *Township* Right-of-Way (also identified as MC).

"***Municipal Drain***" shall mean drainage works assumed, constructed and maintained under the provisions of the Drainage Act, R.S.O. 1990, c.D.17, as amended, including both open and closed drain channels.

"***Owner***" shall mean any person who or any firm or corporation that is the registered *Owner* of the *Lands* under consideration or any agent thereof, and shall include a person entitled to limited estate in *Land*, a trustee in whom *Land* is vested, a committee of the estate, an execurtor, an administrator or a guardian.

"***Peer Review*(er)**" shall mean any *Consultant* or person contracted by the *Township* to act on their behalf.

"***Security***" shall mean all forms of *Security* including but not limited to cash, letters of credit, performance and maintenace bonds and insurance to be provided by the *Developer*, Contractor, Subdivider, Utility company pursuant to the requirements of the *Agreement*s

"***Subdivider*"** shall mean the *Owner* or party specifically names in the Subdivision *Agreement*.

"***Township***" shall mean The Corporation of the Township of Wilmot

"***Works***" shall mean the *Lands* and infrastructure to be constructed by the *Developer / Township*, or as are necessary to provide adequate services to the Capital or *Development* on the *Lands*, including the extension, improvement, enlargement or upgrading of existing infrastructure.

1.3 Acronyms

AODA - Accessibility for Ontarians with Disabilities Act

ASTM – American Society for Testing and Materials

AWWA – American Water Works 15ssociation

CSA – Canadian Standards Assosication

DGSSMS – Region of Waterloo and Area Municipalities Design Guidelines and Supplemental Specifications for Municipal Services

ECA – Environmental Certificate of Approval

FSR – Functional Servicing Report

GRCA – Grand River Conservation Authority

MC – Municipal Concent

MTO – Ministry of Transportation

MNRF – Ministry of Natural Resources and Forestry Services

MUT – Multi Use Trails

OBC – Ontario Building Code

OPSD – Ontario Provincial Standard Drawings

OPSS – Ontario Provincial Standard Specifications

R.O.W. – Township of Wilmot, Region or Provincial Right of Way

RWP – Township of Wilmot Road Work Permit

SWMF – Stormwater Management Facility

TAC – Traffic Association of Canada

TWSS – Township of Wilmot Standard Specifications

1.4 Minimum Tesing Requirements

Overview

This section covers the minimum testing requirements for the following sections:

- Trench compactions
- Topsoil
- Subgrade and road granulars
- Line painting
- Asphalt and Concrete Works
- Lot Grading Requirements
- Water Installation
- Sewer Installation

The minimum testing requirements for each section are intended to be consistent with industry standards and typically follow Ontario Provincial Standard Specifications MECP, AWWA, CSA, ASTM, etc. Where discrepancies are found the more stringent will apply.

In addition to the above, minimum maintenance standards shall be met as per Ontario Regulation 239/02 and 366/18 as amended until final *Assumption* of the right of way corridor by the *Township*. Items that will be required to meet these Ontario Regulations include but not limited to:

- Reflectivity Testing for regulatory / warning signs as per the Ontario Traffic Manual and O.Reg 239/02
- Sidewalks inspections
- Roadway / bike lane platform
- Luminaires
- Right of Way corridor snow clearing and minimum maintenance standards

Trenches

Below table outlines the minimum testing requirements for compaction within trenches for different infrastructure within these trenches. Key requirements include spacing of testing, max lift and what compaction is required.

Material	Area / Usage	Test	Sampling Frequency & Test Requirements	Test Location Identification
Native Material (following acceptance by the *Township* after suitability assessment)	Sewer Trench	Compaction	Min. every 30m, 0.6m max. lift, Maximum Dry Density 95% (OPSS.MUNI 401)	Street, distance from downstream M.H., distance above pipe or below final grade i.e.: Street A, MH23 + 30m, 1.8m above pipe
	Watermain	Compaction	Min. ever 30m, 0.6m max. lift, 95% (OPSS.MUNI 401)	Street, station, offset, distance above pipe or below finished grade i.e.: Street A, 0 + 310, 5.5m Rt, 1m above pipe
	Subgrade	Compaction	Min. every 30m alternating lanes 95% (OPSS.MUNI 401), 98% desirable in top 1m	Street, Station, offset i.e. Street A, 0 + 105, 3.5m Lt
	Watermain Road Crossings	Compaction	Each Crossing, Subgrade (95%) and Granular (100%) (OPSS.MUNI 401)	Street, Station

	Utility Trenches[1]	Compaction	Each Crossing, Subgrade (95%) and Granular (100%) (OPSS.MUNI 401)	Street, Station
	Service Trenches[2]	Compaction	Random Selection 50% of lots Subgrade (95%) and Granular (100%) (OPSS.MUNI 401)	Lot Number

[1] ***Utility crossings are to be installed prior to base asphalt and curb***

[2] ***If storm and sanitary services are installed with mainline sewer, then sewer trench sampling requirement applies. However, water service trenches will have to be reported separately.***

Material	Area / Usage	Test	Sampling Frequency & Test Requirements	Test Location Identification
Granulars A & B	Roadway	Compaction	Min. every 30m alternating lanes 100% (501.08.02)	Street, Station, offset i.e.: Street A, 0 + 105, 3.5m LT
		Moisture Content	Min. every 30m alternating lanes	Street, Station, offset i.e.: Street A, 0 + 105, 3.5m LT

		Gradation Percent Crushed	Granulars are to be sampled at source and gradation checked prior to delivery AND min. 1 check per 100m of road for an 8.5m road gradation to conform to OPSS 1010	Street, Station offset i.e.: Street A, 0 + 105, 3.5m LT
	Utility Trenches	Compaction	Each Crossing 100% (510.08.02)	Street, Station
	Curbline Granular A	Compaction	Every 30m	Street, Station Lt or Rt or North, South, East, West
	Driveway Apron	Compaction Contamination	33% of Driveways at random, 100% (510.08.02) Check to ensure there is 150mm of un-contaminated material	Lot or house #, distance from curb or garage

Asphalt and Concrete

Below table outlines the minimum testing requirements for compaction testing of roadways, driveways, main access roads concrete footpaths/walkways, curbs, etc. Key requirements include spacing of testing, temperature restrictions and compressive strength. *Subdivider* / *Developer / Contract Administrator* to refer to but not limited to OPSS 1101,1103, 1150 and 1350 for further requirements. In particular, OPSS 1150 outline requirements for Asphalt Content %, Voids %, Flow, Stability, VMA% (Voids in Minerals Aggregate) and RAP % (Reclaimed Asphalt Pavement).

Surface asphalt to be a virgin mix and a clean dried surface with tac coat to be applied to base asphalt prior to surface being installed.

Material	Area / Usage	Test	Sampling frequency & test requirements	Test location Identification
Asphalt HL3 & HL4 **1101** **1103** **1150**	Roadway	Compaction	30m each lane 96% (310.07.02.11.01) 97% w/nuclear device (310.07.02.11.02)	Street, Station, Lt or Rt or North, South, East, West or adjacent lot i.e.: Street A, 0 + 225, South lane
	Roadway	Asphalt Temperature	every 150m each lane, 115C to 165C (310.07.02.07, 1150.05.02.01)	As Above
		Ambient Temperature	Each Sample	

			min. + 2 deg. C for HL4 min. + 7 deg. C for HL3	
	Roadway	Marshall Tests (1150.07.03)	1 per 500 tonne from samples taken	As Above
	Roadway	Extraction Tests (1150.07.03)	1 per 500 tonne from samples taken	As Above
Asphalt HL3,HL3a, HL4	Driveway Apron	Marshall Tests	2 per day of paving	Lot or house #, distance from curb or garage
	Driveway Apron	Extraction Tests	2 per day of paving	As Above

	Driveway Apron	Compaction	96% (310.07.02.11.01) 97% w/nuclear device (310.07.02.11.02) 33% of Driveways at random	As Above
	Driveway Apron	Temperature	115C to 165C, with Samples	As Above
Concrete (OPSS 1350)	**Sidewalk**	Compressive Strength	3 locations per 500m of sidewalk min 3 cyls. per location for 7 & 28 day breaks	Station, Lt. or Rt. or adjacent lot or house number
		Slump	First 3 trucks or until consistent, at sampling & every 3rd truck	As Above
		Air Content (7% +/ - 1.5%)	First 3 trucks or until consistent, at sampling & every 3rd truck	As Above

	Curb and Gutter	Compressive Strength	3 locations per 500m of Curbing min. 3 cyls. per location for 7 & 28 day breaks	As Above
		Slump	First 3 trucks or until consistent, at sampling & every sample location	As Above
		Air Content (7% +/ - 1.5%)	First 3 trucks or until consistent, at sampling & every sample location	As Above
	Structures	Compressive Strength	2 sets (3 samples ea.) per pour	As Above
		Slump	First 3 trucks and every 3rd truck after and with samples	As Above
		Air Content (7% +/ - 1.5%)	First 3 trucks and every 3rd truck after and with samples	As Above

Lot Grading

Once the house is fully constructed and the property is fine graded, top-soiled and sodded, the *Subdivider* will secure the services of the *Consultant* responsible for reviewing all the data and the *Consultant* will either certify or reject the lot grading upon inspection.

If the inspection reveals any deficiencies, the *Subdivider*'s *Consultant* will notify the *Subdivider* what further work is required. It is the *Subdivider*'s responsibility to ensure the required work is completed in accordance with their *Consultant*'s overall lot grading plan accepted by the Township.

Upon completion of the required work, the *Subdivider*'s *Consultant* will re-inspect the property. This process will continue until the *Consultant* certifies the work conforms to the Detailed Lot Grading Plan and overall lot grading plan.

Refer to Section 4 for more detail regarding lot grading requirements.

Erosion and Sediment Control

During active servicing and/or grading construction, all Erosion and Sediment Control Devices are to be inspected by the *Consultant* once per week and after each rainfall of 25 mm or greater or significant snow melt. Daily inspections are required during extended rainfall or snow melt periods. These inspections are to ensure that the facilities are in proper working condition and all damaged Erosion and Sediment Control Devices are to be repaired and / or replaced within 48 hours of the inspection. A permanent record of these inspections must be forwarded to Public Works and Engineering Staff within five (5) days of the inspection.

Refer to Section 9 for more detail regarding erosion and sediment control requirements.

Watermains

Pressure Testing and Leakage

Refer to DGSSMS, MOECP, OPSS MUNI, AWWA for requirements for;

- watermain pressure testing and leakage,
- swabbing / flushing
- hydrostatic pressure testing,
- disinfection,
- de-chlorination,
- clorine residual and bacteriological sampling tests,
- final connection to existing water systems,
- tracer wire conductivity testing and valve positioning
- Fire flow tests

Watermain Commissioning Plan

- Plan must be prepared and provided by the *Contractor* and submitted to the Contract Administrator and Public Works and Engineering *Staff* for review to ensure that all testing and sampling requirements for new watermain installation are satisfied
- Plan provides outline of the acceptable procedures required for installation and testing of all new mains and services as required by the Safe Drinking Water Act and in accordance with the requirements of the Drinking Water *Works* Permit
- Refer to DGSSMS for an example of a general Watermain Commissioning Plan and the criteria requirement
- **A Redline Drawing identifying any modifications that differ from the For-Construction set of drawings, and including measurements, swing ties, must be submitted before the final connection.** Redline drawings must be submitted digitally (PDF) to the Project Manager and the Supervisor of Water / Wastewater. Final connection will not be made until the redline drawings have been submitted.

Sewer

Leakage Testing

Refer to DGSSMS, ASTM, OPSS MUNI, etc

- Leakage for details, which also refers to OPSS 410 for infiltration and exfiltration requirements.
- Visual inspection
- Cleaning and flushing
- deflection

1.5 CCTV Inspections

Introduction

This section should be read in conjunction with DGSSMS. This section is applicable to the inspection of both sanitary, stormwater sewage systems and 3rd pipe systems.

The CCTV inspection shall be completed on all capital and *Development* infrastructure projects on all mains, all laterals, catchbasin leads greater than 2 meters in length and rear yard leads. The CCTV inspection reports submitted to the Public Works and Engineering Department shall be free of defects, debris, inflow and infiltration, soil materials, etc. The *Consultant* shall ensure that all sewer lengths are inspected and accounted for. Include with the CCTV Inspection Report, a General Services plan which highlights the inspected pipe and provides lengths to the tees along he sewer pipe starting from the downstream MH.

If *Public Works and Engineering Staff* determines through the sewer mainline and lateral videos that there is damage to one or more sewer laterals within the public road allowance, then the *Subdivider*/*Developer*/*Contractor* will be required to complete the work to repair the damage to the satisfaction of the *Public Works and Engineering Department*, prior to final acceptance by the *Public Works and Engineering Department*.

The *Subdivider*/*Developer*'s/*Township*'s *Consultant* shall ensure that the Equipment Operators are fully conversant with all aspects of sewer inspections and capable of accurate observation and reporting of all conditions found. All Operators must possess PACP certification. Upon request by *Public Works and Engineering Staff*, a copy of each pipeline *Inspector*'s certification document must be provide in the CCTV report.

The internal pipe inspection shall be carried out using specifically designed cameras, video recording equipment and synchronized computer data recording. A continuous visual record of the internal condition of the piping system shall be provided in digital format, with a playback visual resolution equivalent to the camera's recording resolution. The digital submission will also include the associated PDF report of the inspections and will be forwarded to the *Public Works and Engineering Department* once the *Consultant* has completed their review.

Camera Equipment

Camera equipment shall consist of a self-contained, closed-circuit pan and tilt video camera and monitoring unit (OPSS 409). The unit shall have an adjustable lighting system capable of providing a clear monitor picture and a minimum illumination level of 100-foot candles. The camera travel speed shall be as per OPSS 409. CCTV videos not meeting the camera speed will be rejected.

Digital Images/Instant photos

The inspection unit shall be equipped with all equipment required for recording and producing colour digital still image captures of the inspection video image appearing on the operator's monitor during the course of the inspection.

Cleaning/Flushing Precautions

During cleaning operations, satisfactory precautions shall be taken to ensure that the water flow volumes and pressures created do not damage or cause flooding of any public or private property, while still ensuring satisfactory cleansing of the interior of the pipe for inspection. When possible, the flow of sewage in the sewer shall be utilized to aid in the cleaning process. A maximum pressure of 1800psi shall be used in all locations to prevent damage to the sewer lines or flooding into private structures. It shall be at the *Contractor*'s discretion and judgment that flow volumes and cleaning pressures are adjusted appropriately for the age, condition, and circumstances of the inspection site. If in the *Contractor*'s experience "normal" cleaning procedures cannot be undertaken, or satisfactory results cannot be achieved in any section of

sewer, the CCTV *Contractor* must report the findings to the *Consultant* and *Public Works and Engineering Staff*.

Material Removal

Debris such as dirt, sand, rocks, grease, and other solid or semi-solid materials, which is a result of cleaning or construction activities, shall be removed at the downstream maintenance hole of the section being cleaned. Passing material from maintenance hole to maintenance hole will not be permitted due to risk of line plugging. This material shall be removed using the vacuum system on a combination unit.

Material Disposal

Upon request, the *Contractor* shall provide a Ministry of Environment approved dump-site for all material removed from the sewers during the cleaning operation.

Re-inspection

If in the judgement of the Contract Administrator and/or *Public Works and Engineering Staff*, re-inspection of the sewer is required as a result of inadequate cleaning, camera travel speed, quality of the CCTV video and inspection reports, the *Contractor* shall re-clean and re-inspect the sewer at no cost to the *Township*.

Flow Control and Bypass Pumping

When interruption of sewer line flows are necessary to effectively conduct the inspection operations, the CCTV *Contractor* shall, subject to the acceptance of the *Public Works and Engineering Staff*, control flows using plugging and blocking methods. The *Township Public Works and Engineering* Department reserves the right, when necessary, to request bypass and de-watering of a sewer to be viewed to ensure that the full diameter of the pipe is visible. The CCTV *Contractor* may also be required to conduct some CCTV inspection during non-peak flow periods and/or high traffic periods; as such this will result in some work being required at late night time periods outside of established high flow periods.

Maintenance Hole Inspections

The CCTV *Contractor* will not be responsible for inspection or condition reporting of maintenance holes during the performance of contracts, with the exception of reporting blockages or obstructions which may be deemed as potentially causing any flow restriction or backups.

Report

All reports will be submitted in English and be in a computer generated, typed format. The following information will be required to appear on the Front Cover of the Report

1st line Township of Wilmot

2nd Line *Consultant*s Name

3rd Line *Subdivider*/*Developer*'s Name

4th Line Subdivision's Name of Project Name, Phase, Stage, Capital Project Name

5th Line Sewer Type (Sanitary, Storm, 3rd pipe Video Inspection)

6th Line Report Number

7th Line Date of Report DD/MM/YYYY

Sewer Inspection Screen Information

While the camera is stationary, at the beginning of the section, the following shall appear on the screen:

1st Line From M.H# to M.H.# (Structure Number from drawings)

2nd Line Street Name

3rd Line Distance from center of maintenance hole base

4th Line Flow direction – Upstream vs. Downstream

5th Line Size of pipe, type of pipe

6th Line Date of inspection (MM/DD/YY)

While the camera is travelling the following information must appear at the bottom left hand of the screen.

1st Line From M.H# to M.H# (Structure Number from drawings)

2nd Line Street Name

3rd Line Distance from center of maintenance hole base in meters

Defect Coding

When a defect is encountered during the inspection the camera shall be stopped for a reasonable period of time and the defect code will be displayed at the top left hand corner of the screen. These defects will be coded at time of inspection in strict adherence to PACP v6 codes.

1.6 Transportation Impact Study Guidelines

Introduction

One of the *Township*'s key objectives is to operate and maintain a safe and efficient roadway system. The Transportation Impact Study (TIS) guidelines outlined in this section have been established to meet this objective. The review and management of multi-modal *Development*-generated traffic is an integral part of operating and maintaining a safe and efficient roadway system. Transportation Impact Studies provide the opportunity to review and assess the impact of *Development* on the local road network and identify any improvements that are needed to accommodate the proposed *Development*.

The Ontario Ministry of Transportation (MTO) and the Region of Waterloo have established Transportation Impact Study Guidelines that apply to *Development* that may impact on either a Provincial Highway or a Regional road within the *Township*. The MTO "Guidelines for the Preparation of Traffic Impact Studies" and the Region of Waterloo "Transportation Impact Study Guidelines" can be found on their respective websites.

The *Township* Transportation Impact Study guidelines provide direction when, but not limited to:

- A proposed *Development* or zone change is not located near either a Regional road or a Provincial Highway and a Transportation Impact Study is required to assess the need for *Township* road improvements to support the applications, or
- A full Transportation Impact Study is not needed in accordance with Provincial and/or Regional guidelines, but the *Township* has questions about the site proposal that need to be addressed in a Transportation Assessment scoped to the local area and local transportation issues.

These guidelines identify transportation considerations that arise on a regular basis in the review of *Development* applications in the *Township* and are more locally focussed along with a process to review and evaluate improvements that may be required to mitigate the impact of *Development* on *Township* roads. Generally speaking, these guidelines agree with and rely on the most recent version of the Region of Waterloo guidelines and reference the Regional guidelines for format, forms, analysis tools and parameters.

The TIS is an important tool in the overall *Township Development* planning process. The TIS assists *Subdivider*s/ *Developer*s/ *Consultant*s and public agencies in making Land-use decisions about applications for Official Plan amendments, Zoning By-law amendments, Draft Plans of Subdivision, Site Plans, and other planning approvals.

Transportation impact studies benefit the *Township* by:

- Providing decision-makers with a basis on which to assess transportation implications of proposed *Development* applications;

- Providing a rational basis on which to evaluate the appropriateness of the scale of *Development* for a particular site, and determining required improvements, on and off the site, to provide safe and efficient movement of people and goods;
- Providing a basis for assessing existing or future localized transportation system deficiencies which require improvement;
- Addressing transportation-related issues associated with *Development* proposals that may be of concern to neighboring residents, businesses and property *Owner*s; and
- Providing a basis for negotiations for improvements and funding participation in conjunction with a *Development*.

A transportation impact study may vary in scope and complexity depending on the type and size of the proposed *Development*.

Documents beyond these Transportation Impact Study Guidelines that may be applicable include, but are not limited to, the as amended versions of:

- Ontario Ministry of Transportation (MTO) Guidelines
- Transportation Associate of Canada (TAC) Guidelines
- Institute of Transportation *Engineer*s (ITE) Manuals
- Ontario Planning Act
- Ontario Traffic Manuals
- *Township* Traffic Calming Policy
- *Township* Bylaw
- *Township* Zoning Bylaw
- Region of Waterloo Implementation Guideline or Noise Policies
- Other applicable Provincial, Region, and Municipal documents, such as the Regional Traffic Collision Report, Municipalities best practices.

The accepted transportation impact study is valid for one year from the date of acceptance. If a transportation impact study is older than one year, it will be reviewed by *Public Works and Engineering Staff* and/or *Peer Reviewer*s (at the cost of the applicant) and based on the review, the applicant may be required to provide an update.

Purpose of Transportation Impact Study Guidelines

The purpose of these guidelines is to ensure that transportation impact studies prepared for The *Township* meet, but are not limited to, the following criteria:

- Objective assessment – the study will evaluate the impacts of proposed new *Development* in a rational manner;
- Consistency – the study will utilize *assumption*s consistent with the Public Works and Engineering Department accepted methodologies/parameters and industry best practices, and thus be comparable to other transportation studies in the *Township*, surrounding local Municipalities, Region, or Province;

- Recognized by *Subdivider*/*Developer*s and *Consultant*s – the guidelines will provide a standard approach to be followed and will reduce confusion and delay in processing *Development* proposals;
- Promote understanding of the process – the steps outlined in these guidelines will enable applicants, reviewers, the general public, and elected officials to understand the process more effectively; and
- Ease of review by *Public Works and Engineering Staff* or a *Peer Reviewer* – a standardized set of guidelines will aid the efficiency of staff or a *Peer Reviewer* in reviewing Transportation Impact Studies.

Recommended Threshold for Study

In general, a transportation impact study shall be conducted whenever a proposed *Development* (or two or more *Development*s in the same area cumulatively) will generate more than 100, additional (new) peak-hour, peak direction trips to or from the site during the adjacent roadway's peak-hour or the *Development*'s peak-hour, as per the Institute of Transportation *Engineer*s (ITE).

The TIS must adhere to the as amended version of the Region of Waterloo Transportation Impact Study Guidelines. The *Township* may require the *Owner* of the *Land* to provide any improvements needed to accommodate the proposed *Development* to the satisfaction of and at no expense to the *Township*.

Although a *Development* may generate fewer trips than the peak-hour, peak direction threshold of 100 trips, a Transportation Assessment report outlining the current traffic conditions and information related to the proposed *Development* may be required by *Public Works and Engineering Staff*. The Transportation Assessment must be signed by a licenced Professional *Engineer*. The Transportation Assessment may consider, but is not limited to, the following information:

- Proposed building use/zoning requirements
- Peak hour traffic generation
- Driveway locations
- Sight distance assessment
- Loading bay location and design
- On and off street parking design
- Pedestrian and cycling infrastructure including, pedestrian crossings, bicycle facilities and parking
- Need for future traffic calming
- Classification of new roads
- Intersection capacity analysis
- Need for a change in intersection control
- Total traffic volumes (seasonal traffic variation, receiving operational traffic, etc.)
- Justification for a reduced parking provision
- Need for auxiliary lanes

The required scope for the Transportation Assessment may be determined at the pre-study conference. Studies in support of Site Plan applications will be focused on the transportation needs on the site and at the site driveways. All other applications will also include a review of the need for off-site transportation improvements.

Qualifications to Conduct Transportation Impact Study

When the scale of the *Development*/re-*Development* warrants a Transportation Impact Study or a Transportation Assessment, it is the applicant's responsibility to retain a qualified transportation professional experienced in transportation planning and traffic engineering.

Transportation studies must be prepared under the supervision of a qualified, experienced and licenced Professional *Engineer* with specific training in traffic and transportation engineering and several years of experience related to preparing transportation studies for proposed *Development*s. The author shall also be a member of the Institute of Transportation *Engineer*s. The report must be dated, signed, and stamped accordingly. The signing *Engineer* is verifying that appropriate *assumption*s and methodologies have been utilized in the completion of the Transportation Impact Study and that they are the individual who is taking corporate/professional responsibility for the work.

Alternatively, at the discretion of the Director of Public Works and Engineering, the *Township* may retain a *Consultant* at the applicant's expense to undertake the study or the *Public Works and Engioneering Department* may retain a *Consultant* to undertake *Peer Reviewer*.

Transportation Impact Study Process

The Transportation Impact Study process must follow the as amended version of the Region of Waterloo Transportation Impact Study Guidelines.

Pre-Study Conference

Following the Official Pre-Consultation phase of the project, the applicant may be required to arrange for a pre-study conference with *Township Staff* and other relevant reviewing agencies (e.g. adjacent municipalities, Region of Waterloo, Ontario Ministry of Transportation, rail authority, etc.). In the pre-study conference, *Township Staff* and other reviewing agencies will confirm the scope of the transportation impact study and determine data requirements and their availability. In addition to the *Township*'s requirements, adjacent Municipal, Regional and Provincial (MTO) roadway authorities may require additional information or analysis to satisfy their requirements for a *Development*/re-*Development* proposal.

The Applicant must follow the as amended version of the Region of Waterloo Transportation Impact Study Guidelines. When requesting a pre-study conference meeting, the *Consultant* will submit a plan for the *Development* along with a pre-study conference form outlining the proposed approach to the study.

When a proposal is relatively small and does not require a TIS, pre-study conference may be done by phone and e-mail where the scope of a Transportation Assessment can be proposed by the applicant's *Consultant* and agreed to with Public Works and Engineering *Staff*.

Preliminary Review

The applicant is responsible for preparing minutes of the pre-study conference, updating the pre-study conference form to reflect items agreed to during the pre-study conference meeting, and distributing them to all appropriate parties for review and approval. The approved minutes must be included as an appendix in the TIS report.

Data Collection

The applicant is responsible for collecting, assembling, analyzing, and presenting all types of data required for the study. The assembly of available data shall be accompanied by a detailed investigation of the project site, area streets and the surrounding vicinity. This process shall include recording all relevant characteristics needed for the analysis (e.g. adjacent *Land* use, description and classification of area roads including speed limits, location of on-street parking, available sight lines near proposed driveways, and location of nearby driveways and intersections) plus observations and data collection of existing traffic patterns and travel characteristics in the study area.

Current data shall be collected to supplement the available data as necessary. All transportation survey data shall not be less than two years old. Such data shall be obtained through surveys consistent with procedures described in the current edition of the Manual of Traffic Engineering Studies published by the Institute of Transportation *Engineer*s.

Any factors used in the transportation impact study analysis that are different than the Region of Waterloo standards must be justified and agreed upon with *Public Works and Engineering Staff* and then documented in the final report.

A description of the TIS inputs, including but not limited to a list of the traffic counts, collision data, and traffic signal timings that were used in the study with the dates and sources shall be included in the final TIS report. Where there are large amounts of data, they shall be submitted digitally as a separate item.

Post Traffic Study Functionality Testing

Once the *Development* is complete, and at the discretion of the Director of Public Works and Engineering and signed within a subdivision or Site Plan *Agreement*, the Subdivider/*Developer* must evaluate the traffic impact study based on current/future build-out condition to confirm the proposed traffic impact is correct. If the traffic impact does not meet the designed / accepted traffic impact study, the Subdivider/*Developer* may be required to conduct post-remediation as needed at the cost of the Subdivider/*Developer*.

Transportation Impact Study Report Review

The TIS report must follow the format outlined in the most recent version of the Region of Waterloo guidelines. This format will facilitate and expedite review, discussion, and communication. The report shall consist of a main document containing the text and exhibits including summary tables, supplemented by technical appendices detailing the analysis. A site plan or concept plan of a suitable scale is required for consideration in the review of the transportation impact study. If the proposed *Development* is to be constructed in phases, a description of each phase and the proposed timing of implementation must be provided. All elements of the TIS report may not be requested depending on the size and nature of *Development*; this will be determined at the pre-study conference.

Two paper copies of the TIS report along with one electronic copy of the report including all technical appendices (in .pdf format) must be submitted to the *Township* for review. Additional copies may be required for other agencies as determined at the pre-study conference.

A preliminary review of the submitted TIS will occur. Any revisions, supplementary analysis, or change to the original study, must be documented and a consolidated final version must be submitted to the *Township*.

Acceptance of the TIS does not constitute approval of the *Development* application. Conditions imposed by other *Township* Department reviewers must also be resolved.

Transportation Impact Study Report Contents

The TIS report must follow the format outlined in the most recent version of the Region of Waterloo Transportation Impact Study Guidelines. In addition to the above noted TIS guidelines the following items must be considered, as a minimum, and included in the TIS report.

Non-Auto Modes, Transit, Pedestrians, Bicycles

The study must analyze and evaluate the roadway's performance with regard to accommodating transit, pedestrians, and cyclists in the study area using the Highway Capacity Manual and any other generally accepted guidelines. This includes a safe passage for pedestrians within the *Development*.

The assessment considerations for transit include but are not limited to:

- Frequency and hours of service
- Presence and location of bus stops relative to the site

The assessment considerations for pedestrians may include but are not limited to:

- Presence, connectivity, and width of sidewalks and trails
- Barriers and buffers from traffic
- Crossing opportunities at intersections and midblock locations

- Need for additional pedestrian crossings including signalized crossings, pedestrian crossovers and pedestrian refuge is*lands* in accordance with the most recent OTM warrants
- Facilities designed to AODA (Accessibility for Ontarians with Disabilities) standards
- Presence of illumination
- Relevant pedestrian destinations in the area including schools

The assessment considerations for bicycles may include but are not limited to:

- Presence of dedicated facilities
- Network connectivity (roads, MUT, local trails)
- Number and width of travel lanes adjacent to the route
- Volume and speed of traffic
- Percentage of trucks and buses encountered
- Pavement condition
- Proposed bicycle parking for visitors, employees and residents.
- Other proposed amenities for cyclists including showers, change rooms, and indoor, secure parking.
- Grand River Accessibility Advisory Committee documents

The recommended measures to improve walking, cycling, and transit environment in the study area must comply with best industry practices and recognized success/approval within the *Township* and surrounding Municipalities.

Site Access and Circulation

The number and location of access points must be reviewed to ensure only the minimum number necessary is provided to serve the project without negatively impacting the flow of traffic along abutting streets. Access points must be located on minor roads where feasible and justification for more than one access must be based on the capacity for site traffic, not design preference.

The locations must be adequately spaced from adjacent street and driveway intersections. The number of exit lanes, radii, and vehicle storage must be appropriate to accommodate traffic demands placed on them. The throat length at the road must be sufficiently long to minimize conflicts with street traffic and within the site.

Access points shall be evaluated in terms of capacity, safety, and adequacy of queue storage. Access points must be free of all visual encumbrances. Additionally, there shall be no utility boxes, hydrants, hydro poles etc. within 1m of the edge of the access points.

Sight distance at new access points must be evaluated to ensure safe conditions in accordance with the Transportation Association of Canada Geometric Design guide for Canadian Roads. In addition, appropriate restrictions must be applied to access points and confirmed with *Public Works and Engineering Staff* to ensure that sight distances are maintained.

On-site parking/circulation systems must be designed to avoid queues backing onto *Township* roads and the need for vehicles to reverse onto *Township* roads.

Proposed garbage and loading facilities and access to these facilities shall be designed to ensure that they are adequately sized and provided with suitable access so that they will not adversely affect traffic operations on *Township* roads.

An AutoTURN analysis is required to analyze path maneuvers of ingress and egress of all trucks, plows, emergency vehicles, loading and garbage vehicles needed on site. All trucks, plows emergency vehicles, loading and garbage vehicles must enter and exit in a forward motion and must be accommodated in the design. Any required turning restrictions or other restrictions must be identified and appropriate design implements be put in place to physically restrict the turning movements.

Turning restrictions, either by time of day or through physical barrier, may be considered at new access points that are close to existing intersections or where there are concerns about the operation of one or more of the turning movements, in particular when queues from adjacent intersections are expected to block the new access.

Remedial Measures

The TIS must identify remedial measures to any impacts identified. These remedial measures include, but are not limited to the following:

- All transportation system improvements identified as necessary or desirable to serve the proposed *Development* or to accommodate the background traffic must be listed and the timing of their implementation must be identified;
- Criteria and timing that will trigger all street improvements must be documented and the improvements must be shown on a functional plan indicating dimensions, required pavement widening, line marking/signage, required right-of-way widening, traffic control and other significant characteristics including the location of all curbing, driveways, and intersections on both sides of the road. In some cases, a detailed design and cost estimates may be required;
- When improvements to an intersection are proposed, the design plans must show all legs of the intersection and at least 75m past the intersection on each leg, so that turning paths and lane continuity can be reviewed;
- All "critical" traffic movements or other traffic (including pedestrians and cyclists)/transit impacts that cannot be successfully mitigated must be identified;
- An analysis of the remedial measures must be undertaken and documented in the TIS;
- Once the traffic analysis has been accepted, approval of the Transportation Impact Study may be granted conditional upon the feasibility of the recommended plan;
- Cost estimates must be provided for all recommended improvements.

Conclusions and Recommendations

It is important to structure recommendations for improvements within appropriate time horizons. The conclusions and recommendations must include a summary of key conclusions with respect to the transportation impact of the proposed *Development* and a summary of recommended improvements and unresolved problems/issues. Recommendations must be sensitive to, but not limited to, the following issues:

- Timing of short-range and long-range network improvements that are already planned and scheduled;
- Anticipated schedule of adjacent *Development*s;
- Size and timing of individual phases of the proposed *Development*;
- Logical sequencing of various improvements or new transportation infrastructure;
- Right-of-way needs and availability of additional right-of-way within the appropriate time frames;
- Local/Regional/Provincial priorities for transportation improvements and funding;
- Cost-effectiveness of implementing improvements at a given stage of *Development*; and
- Necessary lead-time for additional design and construction.

Since improvements can often be implemented in more than one order, the recommendation must address an implementation sequence that would provide maximum compatibility with the overall roadway system configuration needed for network effectiveness.

As a minimum, designs and recommendations must comply with the Ministry of Transportation of Ontario Geometric Design Standards for Ontario Highways, the Ontario Traffic Manuals, and the Transportation Association of Canada Geometric Design Guide for Canadian Roads, Best Management Practices from area municipalities, as well as *Township* policies and practices.

Appendices

Appendices shall include, but are not limited to, the following:

- Approved minutes of the pre-study conference;
- Calculations for intersection capacity analyses, using software approved by the *Township* including all input parameters and full printouts detailing the traffic volumes, turning movement volumes, level of service, volume/capacity ratios, delays, and queues;
- Calculations for any auxiliary lane warrants;
- Calculations for any traffic control warrants;
- Calculations for any Initial Roundabout Screening; and
- Cost estimates and timing of proposed *Works*

1.7 Hydrogeological Study Standards

Introduction

The purpose of this document is to provide guidance on the details required for hydrogeological studies for proposed *Development*s (residential, commercial, industrial etc.) within the *Township*. These standards are intended to assist *Subdivider*s / *Developer*s and their *Consultant*s at the initial stages of *Development* design and site investigation, but an initial pre-study conference with *Public Works and Engineering Staff*, Region of Waterloo and/or *Peer Reviewer* (as determined by the Director of Public Works and Engineering) is required prior to starting the hydrogeological assessment to determine the site-specific scope of work required. A concept plan and existing site information is to be provided 3 weeks before the pre-study conference.

These guidelines are not applicable to the following:

- A Single-lot *Development* (i.e. one lot with one single-family residential dwelling) with an area of 1.0 ha or larger that does not fall within identified Significant Groundwater Recharge Areas (SGRA), area of Groundwater Under Direct Influence (GUDI) of surface water, municipal wellhead protection sensitivity areas (WPSA) –1 or -2, or GRCA regulated areas.
- Municipal infill projects (i.e. *Development* or re*Development* supported by municipal services) consisting of less than three units.

Please Note: For municipally serviced projects of three units or more, a Pre-Study Conference scope meeting with *Public Works and Engineering Staff* and/or a *Peer Reviewer* will be required to determine the hydrogeology study scope of work. All municipally serviced projects will be evaluated on a case-by-case basis, and the scope of work for municipally serviced projects can be expected to vary from the requirements outlined below.

This document outlines the minimum requirements for background review, initial fieldwork, monitoring requirements, and reporting for new *Development*s or reDevlopments. This document is intended to be consistent with other guidelines and standards provided by the Region of Waterloo and the Ontario Ministry of the Environment, Conservation, and Parks (MECP).

It is important to consider that the standards outlined in this document are subject to review and modification by *Township Public Works and Engineering Staff* to reflect individual site conditions and individual project scopes. As noted above, a Pre-Study Conference scope meeting with *Public Works and Engineering Staff* and/or a *Peer Reviewer* (at the expense of the applicant) will assess the scope of work required for specific *Development* proposals.

As a minimum, the Hydrogeology Report submitted will provide information on the site water balance, soil infiltration rates, identified recharge/ discharge areas, and on water supply private onsite wells and private septic tanks in accordance with Conservation Authority Guidelines to

support *Development* Applications, MECP Technical Guidelines for Individual On-site Sewage Systems, Ontario Drinking Water Standards, and the Ontario Building Code. The report will also describe the planning context and relevant provincial, regional and municipal legislation, and policies (e.g. Source Water Protection (O.Reg. 287/07) and the *Township* Official Plan as amended).

Hydrogeological studies are required to evaluate whether the proposed application is likely to result in adverse/negative impacts to subsurface aquifers, existing groundwater users or natural functions of the ecosystem relying on groundwater, and both on-site and adjacent surface water features. The report must include sufficient investigation and analysis to assess groundwater infiltration and recharge, baseflow (supporting streams and wetlands), groundwater elevations and flow paths (and the potential to divert flow, cause flooding, or divert shallow flow causing impacts to shallow-rooted vegetation and wetland features) and cumulative watershed impacts.

Documents beyond these Engineering Design Standards that may be applicable for an engineering design include, but are not limited to, the as amended versions of:

- Environmental Protection Act;
- Health Protection and Promotion Act;
- Ontario Water Resources Act;
- Ontario Safe Drinking Water Act;
- MECP Technical Guideline for Private Wells: Water Supply Assessment (Procedure D-5-5);
- MECP Technical Guideline for Individual On-site Sewage Systems: Water Quality Impact Risk Assessment (Procedure D-5-4);
- MECP Servicing Options Statement (Procedure D-5-3);
- Ontario Building Code;
- Grand River Conservation Authority (GRCA) considerations for *Development*s that are within the regulation limit.

Background Review

The purpose of the background review includes but is not limited to collecting existing geological and hydrogeological information for the site and within the regional context.

Identification of Site Location

Identification of the site location shall include, but is not limited to, the following information:

- Lot number and concession;
- Roads and/or highways/railways/hydro corridors bordering the site;
- *Land* use designations of the Official Plan and permitted uses in the zoning of the site and *Lands* within a minimum radius of 500 metres from the site, or as deemed appropriate by the Public Works and Engineering Department;
- Present *Land* use of the site and adjacent *Lands*;

- Location of all municipal wells and Wellhead Protection Areas (WHPAs) and private water supply wells within a minimum radius of 500 metres from the site, or as deemed appropriate by the *Public Works and Engineering Department*;
- Location of GRCA-delineated wet*land* areas within a minimum radius of 500 metres from the site;
- Total area of the site and proposed developed area, including pre-*Development* and post-*Development* pervious and impervious areas

Data Review

A review of all available geologic and hydrogeological information shall be conducted prior to commencing the preliminary field program. The data review shall include, but not be limited to, the following:

- Topographic maps (1:10,000);
- Quaternary geology maps and reports;
- Bedrock geology maps;
- Hydrogeological or geotechnical reports for adjacent existing and proposed *Development*s;
- MECP water well records;
- Water-supply reports for existing nearby *Development*s;
- Groundwater quality or quantity data;
- MECP and/or GRCA hydrogeology/hydrology files;
- Hydrogeology maps;
- Source water protection plans including Wellhead Protection Area (WHPA) mapping;
- Soil maps;
- Slope stability evaluations;
- Existing tile maps for the proposed *Development* area and neighbouring farmer's fields;
- Source water information;
- GRCA information;
- *Municipal Drain* information.

Source water impacts must be evaluated based on current Region of Waterloo standards and procedures and the Grand River Source Protection Plan (Policy RW-CW-19 as amended). Potential drinking water quality threats must be identified and evaluated. This includes determining whether the planned activities/operations on the property are located within a vulnerable area, and identifying potential drinking water threats for which the source protection plan policies apply.

The information obtained from the existing data review must include, but is not limited to, the following:

- Site setting including surface relief, watercourses, Provincially Significant Wet*lands* (PSWs), ponds, Environmentally Sensitive Policy Areas (ESPAs), Sensitive Groundwater Areas (i.e. Regionally Significant Recharge/Discharge Areas), etc.;

- Regional and site geology including overburden thickness and soil types (e.g. glaciofluvial, outwash, etc.) and bedrock type (e.g. unit, age, etc.); and,
- Regional groundwater system including overburden and bedrock aquifers, general identifiable units, general characteristics, flow directions, municipal/communal well locations, private water supply well locations, recharge and discharge areas, Wellhead Protection Sensitivity Areas (WPSA), the potential for Groundwater under the Direct Influence of Surface Water (GUDI), etc.

Initial Field Program

Based on the results of the review of the available information, a field program will be designed and implemented to undertake a preliminary determination of site-specific groundwater conditions. The purpose of the Initial Field Program is to conduct a preliminary assessment of the potential impacts of the *Development* on existing natural features, private water supply wells, and private sewage effluent disposal (septic) systems. The initial field program also includes, but is not limited to, the seasonally high groundwater table level, seasonal trends in the water table, and whether a perched water table is present. Discussions with Public works and Engineering *Staff* and potential *Peer Review* professionals must be conducted as part of the Pre-Study Conference scope meeting prior to commencing the Initial Field Program. Any cost associated with requiring a *Peer Review* professional at the consultation meeting or reviewing submitted information will be at the expense of the applicant.

It is anticipated that this initial field program will be undertaken prior to the *Development* of the site's servicing scheme, lot design, and detailed *Land* use. As part of the detailed design work and/or the long term monitoring for the site, additional field programs may be required and subject to change.

The site investigation and field program must be managed and overseen by a qualified professional *Engineer* or a professional geoscientist.

Door-to-Door Survey

A door-to-door inventory of water supply wells within a minimum radius of 500 m (a larger area may be warranted depending on local circumstances) of the proposed *Development* shall be conducted. The survey will be conducted to field verify and augment information obtained during the data review. The survey shall collect information including, but not limited to, the method of construction and well depth, water level, pump intake and well depths, water use, general water quality, any reported quantity/quality issues, and suitability of private wells for future monitoring, if required. The survey will also investigate the location of private septic systems, type, and age of the systems when they were last serviced, and any issues identified by the homeowner and existing Township / Region records. Where homeowners are not available during the survey, or are unwilling to participate during the survey, a copy of the survey form shall be left at the home along with an explanatory letter and a self addressed

stamped envelope. A record of all homeowners who participate, and who received copies of the survey form, shall be included in the report.

Monitoring Well Installation

The investigation shall include the drilling and installation of a minimum of three monitoring wells to determine site-specific geologic and hydrogeological conditions. The exact number of monitoring wells will be dependent on the size of the *Development* and any anticipated changes in geological or hydrogeological conditions at the site. The rationale for the locations, depths, and quantity of the proposed monitoring wells must be provided during the Pre-Study Conference process with *Public Works and Engineering Staff*. The depth of the monitoring wells shall be sufficient to identify the shallow groundwater table. If perched water conditions exist within 5 metres from the ground surface, three monitoring wells must be installed within the stratigraphic unit where the perched water table exists. Additionally, a minimum of one borehole shall be drilled a minimum of 10 metres into the underlying aquitard to assess the thickness and composition of the aquitard layer. If the aquitard is less than 10 m in thickness, a second monitoring well shall be installed in the underlying aquifer and the drilling plan revised to include sufficient monitoring wells installed in the underlying aquifer. If a continuous aquitard 10 metres in thickness is proved by the borehole, it can be concluded the aquitard is of sufficient thickness to protect underlying aquifers and additional deep monitoring wells are not required.

If no perched conditions (within 5 m) are encountered, the three monitoring wells shall be installed at the depth of saturated aquifer conditions.

Upon completion, all monitoring wells must be sufficiently flagged, protected, and maintained to ensure they are not damaged by agricultural or construction activities.

All monitoring wells are to be fully developed (purged) to ensure accurate water levels and quality information will be obtained as part of the monitoring program described in Section **Error! Reference source not found.**.

Single response in-situ hydraulic conductivity testing (slug testing) will be conducted in all monitoring wells to assess the saturated hydraulic conductivity of the water-bearing soils.

Surveying of Site

All groundwater and surface water monitoring locations shall be surveyed to UTM co-ordinates using the NAD 83 datum Zone 17. Surveying shall establish elevations with respect to metres above sea level (mASL) for all surface water and groundwater monitoring locations.

Monitoring Program

A groundwater level and chemistry monitoring program shall be established to gather technical information needed to support the hydrogeological interpretation. Water levels from all

monitoring wells, and possibly adjacent private water supply wells depending on site conditions and availability, will be measured on a minimum of a quarterly basis continuously for at least two years prior to draft approval; however, continuous water level monitoring utilizing barometrically compensated electronic pressure transducers (data loggers) is the preferred method for data collection. The two years of continuous groundwater levels and groundwater chemistry data must be obtained within five years of the draft plan submission date.

Groundwater level monitoring is required for a minimum of one additional year following draft approval with the knowledge that any changes in hydrogeological conditions in the third year of monitoring could affect aspects of the *Development* design. The monitoring is required to establish baseline hydrogeological conditions, including maximum/minimum water table elevations and seasonal fluctuations, groundwater flow directions, horizontal and vertical hydraulic gradients, and relationships between the groundwater and surface water features in the immediate vicinity of the site. Monitoring wells may need to be monitored for additional years prior to, during, and after *Development*, with the length of time established as part of the hydrogeological study discussed in Section **Error! Reference source not found.**. Per Ontario Regulation 903 (as amended), all monitoring wells and/or supply wells which are no longer in use must be decommissioned, and the decommissioning must be completed by a Licensed Well *Contractor*.

Groundwater chemistry samples shall be obtained from a minimum of two wells screened in the aquifer (or, two wells screened in perched conditions plus one well screened in the underlying saturated aquifer) identified during drilling, with analysis of a general chemistry suite of parameters including but not limited to metals, anions, E. coli, Total Coliforms, and nutrients. Groundwater chemistry samples shall be collected annually (the same month each year) during the groundwater level monitoring program.

Long Term Groundwater Monitoring

The groundwater monitoring program described in Section **Error! Reference source not found.** shall continue from the initiation of the monitoring program continuing through the draft plan approval until two years past 95% of *Development* buildout. The program must include, but is not limited to, the following:

- Whether fluctuations in the groundwater table exceed the minimum separation of 0.6 m from the underside of foundation footings for residential/non-residential buildings and/or the minimum separation of 0.8 m from the underside of basement floor for walk-out residential/non-residential buildings.
- Whether groundwater chemistry changes exhibit deleterious trends.
- Whether groundwater fluctuations exhibit deleterious trends.

In the event long term monitoring data shows the minimum separation distance is exceeded, or negative impacts are occurring, *Public works and Engineering Staff* and/or *Peer Reviewer* and the applicant shall review the data and determine a course of action.

Hydrogeological Study Report Requirements

Following the completion of the evaluation of all existing data and test results, a hydrogeological study report shall be prepared. The report will be updated via an annual monitoring report at the end of each year with long term monitoring data as it is collected. The report will provide an evaluation of the potential impacts of the proposed *Development* on adjacent private water supply wells and septic systems, potential impacts to groundwater and surface water features and resources, and whether perched water table conditions exist. The hydrogeology report will include, but not be limited to, the methods of analysis and summarize the information obtained from Sections **Error! Reference source not found.-Error! Reference source not found.**. Additionally, the report will provide information including, but not limited to, the following:

- Meeting minutes from the Pre-Study Conference scope meeting;
- Geologic cross-section(s) summarizing the regional and local site conditions;
- The groundwater table elevation, including the highest and lowest measured water levels. For proposed *Development*s of one to four lots, a tabular summary of the seasonally high groundwater table vs. underside of footings at each lot shall be provided. For proposed *Development*s of five lots or more, a drawing of the seasonally high groundwater level contours vs. underside of footing elevations shall also be provided to visually illustrate the separation distance for each lot.
- A determination of whether the groundwater level monitoring period is representative of normal, above-average or below-average annual precipitation conditions. This could include checking regional weather data, data from other sites that have long term monitoring data, weather station data, or information available from the Canadian Climate Centre, the Region of Waterloo, the GRCA, the City of Kitchener, and the University of Waterloo;
- An assessment of any potential interference with municipal or private water supply wells related to the proposed *Development*;
- An evaluation of the connection between perched groundwater, the shallow groundwater aquifer, and nearby surface water features (if present);
- An assessment of any potential impacts to surface water or changes in wetland function in the context of groundwater recharge (e.g. focused recharge areas) and groundwater discharge related to the proposed *Development*;
- If perched water or shallow groundwater aquifer conditions exist, is the seasonally high perched water table within 0.6 m of the underside of foundation footings (or within 0.8 m of the underside of foundation footings for basement walk-outs);
- Any implications for *Development* construction on groundwater and surface water resources;
- Recommendations for a continuous monitoring program to be undertaken during the design, construction and post-construction stages for the proposed *Development*;
- Pre-*Development* and post-*Development* site water balance calculations (using the Thornthwaite and Mather methodology) assessing changes in infiltration of precipitation;
- Water course category;

- Source water impact information;
- Recommend measures required during construction for installation of underground infrastructure, i.e. Requirement for dewatering, non EASR, or PTTW requirements, cut off collars, pressure pipe, MH/pipe joint wrapping, etc.

The results of the Hydrogeological Study Report will be reviewed by the *Township* (and/or a *Peer Review* agent selected by the *Township*) and/or third-party agencies such as the Region of Waterloo or the GRCA if required. The *Township* may require additional studies if deficiencies/ inconsistencies or concerns in the report are identified. Any costs associated with requiring *Peer Review* or third-party agencies' input will be at the expense of the applicant.

Additional Investigations and Reporting

As the servicing details, lot design and overall *Land* use for the *Development* is determined, it may be necessary to conduct additional investigations. Issues that could lead to these additional investigations include, but are not limited to, potential impacts as identified in initial reporting, insufficient data coverage based on *Development* size, design of a stormwater management pond, impacts from cut and fill activities, groundwater influence on building design, whether there is a phased-in approach to *Development* construction, or other issues identified by *Township* Public Works and Engineering reviews. Any new monitoring wells installed on the property shall be incorporated into the groundwater monitoring program, with details of the new wells and monitoring included in the subsequent monitoring reports. Annual monitoring reports shall be submitted to the *Township Public Works and Engineering* for review.

The *Township* requires the review and assessment of the Hydrogeological Study Report to ensure that the soil, groundwater and surface water conditions of the Site have been sufficiently investigated and potential impacts properly assessed, and that appropriate monitoring and mitigation methods are recommended. All costs associated with *Peer Review* or Third Party review of submitted reports and documents shall be the responsibility of the applicant.

The hydrogeological study is anticipated to correspond with the level of risk posed to the groundwater and surface water resources.

1.8 Survey Control Requirements

Introduction

The *Township* completes / requires a variety of surveys for the design, acceptance and construction of Capital Construction, *Municipal Drains*, *Municipal Consent*s and *Land Development* Projects. Below is a general outline of the criteria for the complete surveys to be submitted.

Documents beyond this Infrastructure Standards and Specifications that may be applicable for an engineering design construction and as recorded requirements include, but are not limited to, the as amended version of:

- Ontario *Land* Surveyor Act
- Ontario Specifications for Horizontal Control Surveys (OS 79) and Ontario guidelines for Horizontal Control Surveys (OG 79)
- OPSS MUNI General Conditions
- The Criminal Code of Canada

Survey Control Points

Horizontal Control

As the survey information provided will be used for engineering and construction purposes it must be conducted in ground coordinates (no scale factor) according to the following parameters: UTM NAD83 Zone 17 North. Brought to ground coordinates on site. Preferably centered on the site. Ground scale point coordinates are to be identified as well as the ground calculated scale factor.

The distance shown on a plan shall be adjusted horizontal ground distance, and the following note shall appear on the plan: “Distances shown on this plan are adjusted ground level distances, and can be used to compute grid co-ordinates by multiplying by a combined scale factor of…..”

Vertical control

Canadian Geodetic Vertical Datum of 1928, 1978 Southern Ontario Adjustment (CGVD28:78). The Survey must be referenced to a geodetic monument of this datum. **Surveys will not be accepted if vertical reference is only to a geoid model based on GPS measurements.**

Survey control left on site

Since this survey control information will likely be used by others for further engineering work and construction, benchmarks and horizontal control points (which may be one in the same) will be placed on site in areas where they will not likely be disturbed. This will be done at intervals no greater than 100m. A minimum of four control points will be left on any site. Survey plans will be delivered in PDF and AutoCAD format with all survey data intact. Control points are to be easily identified and also provided in text format.

General Requirements

a) The *Subdivider* / *Developer* / Surveyor shall install permanent geodetic benchmarks in such locations as required and approved by the *Township*. The elevations shall be

transferred by a Professional *Engineer* or an Ontario *Land* surveyor and submitted to the *Township*.

b) The *Subdivider* / *Developer* shall provide *Public Works and Engineering Staff* with a written statement by an Ontario *Land* Surveyor indicating that they have found or replaced all Standard Iron Bars and property bars shown on legal survey plans, prior to acceptance into maintenance and at final *Assumption*.

c) The *Subdivider* / *Developer* / Contractor shall provide grade stakes at each lot (or will arrange for the Builder to do so) to ensure that the dwellings are constructed at a grade which will be compatible with the road grade and which will permit lot drainage, to the satisfaction the Contract Administrator and the *Township Public Works and Engineering Department*. The *Developer* shall have the final accepted elevations for each lot verified by the *Consultant* following completion of construction on the lot. Verification of lot and building grades are required at the stages identified in the Lot Grading Process Flow Chart in Section 4 of this document.

Benchmarks on Drawings

Reference to the original geodetic benchmark and any site benchmarks used to complete the survey will be referenced on the topographic survey plan and all subsequent engineering drawings.

Property markers

The surveyor will make every effort to find any property bars or markers within the scope of the survey. Property markers / boundary lines are to stay in place as per the Criminal code of Canada R.S. 1985, c. C-46 under Part XI, Sec. 442 and 443.

Monuments and Benchmarks

Monuments

General requirements

The *Contractor* shall be responsible for the preservation of all Property Monuments while the work is in progress, except those Property Monuments that need removal to facilitate the excavation and servicing of the work. All Monuments disturbed, damaged, or removed by the *Contractor*'s operations shall be documented in an inventory report and replaced under the supervision of an Ontario *Land* Surveyor. Monuments removed to facilitate the work shall be replaced at the *Owner*'s expense, and all others shall be replaced at the *Contractor*'s expense.

Prior to construction the *Contractor* shall locate on site those Monuments that are identified on the engineering drawings and protect them with highly visible T-bars and / or 36” tall stakes with survey ribbon set within 0.3 metres of them. Any monuments not shown on drawings but found during the construction process shall be protected in the same manner.

The horizontal control monument shall be a round iron bar (0.025m x 1.22m) with brass cap or any monument approved by the “Ontario Specifications for Horizontal Control Surveys (OS 79)”.

The location, description and pertinent information with respect to the monuments shall be indicated on all engineering drawings and on the *Township*’s Survey Monument Record Sheet.

Monuments are to be placed in each plan/phase of a *Development*, to establish both vertical and horizontal control.

Locations to be as directed by *Public Works and Engineering Staff*. *Public Works and Engineering Staff* will provide confirmation required prior to construction of concrete monument.

Establishment of subdivision, site plan control monumentation prior to start of maintenance acceptance

Prior to the start of maintenance of the subdivision, the *Subdivider* / *Developer*’s Surveyor shall establish a network of control monuments that have both horizontal and vertical information associated with them. Horizontal values shall be UTM, NAD83 (CSRS), Zone N17. Vertical datum shall be based on the same benchmarks used for engineering and construction purposes.

Establishment of these monuments shall be at approved locations to the satisfaction of the *Township*, using the following criteria as a minimum unless otherwise accepted by the Township Public Works and Engineering Department:

Two (2) horizontal control monuments and two (2) vertical control benchmarks for the first ten hectares (10ha) (or less) subdivided by the plan, and one (1) additional horizontal control monument and vertical control benchmark for every additional ten hectares (10ha) (or less) subdivided by the plan.

In addition to the above, control monuments shall also be established on the top of the inlet concrete headwalls to assist in monitoring future stormwater management water levels for municipally owned ponds.

Demarcation monuments

These shall be placed where lots back onto trails, green space, stormwater management facilities, outside project boundaries, etc.

- Placed every 30 metres and / or in the centre of the lot and / or where there is a change of direction in property line.
- Be 1.8 metres long with 0.9 metres above the finished grade.
- Be 9 cm by 9 cm in size; and
- Be made of grey recycled plastic.

Benchmarks

Plaques to be used as stipulated by the *Township* and have an identification number stamped on them as directed by *Public Works and Engineering Staff*. Numbers are to be stamped prior to final installation.

Submissions to be made in the format indicated by *Township Public Works and Engineering Staff*, stamped/sealed by the OLS. Supporting calculations, leveling and adjustment sheets, to be provided verifying the methodology and calculations.

Subdivision, Site Plan, Infill Lot Acceptance

Prior to initial acceptance, release of *Security* and placed into maintenance, the *Subdivider* / *Developer* shall engage an Ontario *Land* Surveyor to ensure that all Standard Iron Bars and lot corners shown on the legal plans have been found or replaced.

The *Subdivider* / *Developer* shall provide the *Township* Public Works and Engineering Department with a written statement and map signed by an Ontario *Land* Surveyor indicating that they have found or replaced all Standard Iron Bars shown on legal survey plans, prior to the commencement of the *Maintenance Period*.

1.9 As Recorded Drawings

As-recorded drawings shall be submitted along with the initial Maintenance Package and the drawings shall conform to the following criteria but not limited to: Red line drawings shall be provided before the final watermain connection is scheduled / completed, DGSSMS and various sections in this manual.

The information shown on the “As Recorded” drawings may be checked by the *Township* at any time before the “Final *Acceptance*” of the *Development* and Capital Project and if discrepancies are found between the information shown on the drawings and the field conditions, the drawings will be returned to the Engineering *Consultant* for rechecking and future revisions. The Engineering *Consultant* shall be required to explain, in writing, any major differences between the “As Recorded” drawing and actual field conditions. Any costs incurred by the *Township* or a future applicant due to inaccurate data produced by the *Consultant*, invoices will be sent to the *Consultant* for payment.

As-Recorded General Services Plans

Prior to initial *Acceptance* of services, the required location plans for “As Recorded” measurements are to be completed and submitted showing all necessary details for underground service installations. The DGSSMS and *Township* requirements are to be followed.

As-Recorded General Services Plans are required for the following but not limited to:

- Sanitary Sewers
    - *Consultant* is to provide the *Township* with as-recorded inverts at property line and chainage from the downstream maintenance hole (0+000) to the tee or measurement from lotline monument / iron bar, etc.. Digital service cards are to be provided.
- Storm Service and Catchbasin
    - *Consultant* is to provide the *Township* with as-recorded inverts at property line fro the storm service and chainage from the downstream maintenance hole (0+000) to the tee or measurement from lotline benchmark. Digital service cards are to be provided
    - Location of service and catchbasin lead tie connections at the main line sewer are to be dimensioned along the mainline sewer from each downstream maintenance hole;
- Watermain Valves, Tees and Appurtenances and Water Services
    - Location of watermain valve box and valve chambers are to be dimensioned up or down the road from the nearest maintenance hole and an offset distance from the centreline of the road or back of curb;
    - Water main stops are to be dimensioned along the alignment of the watermain from the nearest valve and curb stops, and curb boxes / curb stops are to be dimensioned from lot corners;
    - “As Recorded” watermain obvert elevation at 50.0 m intervals, changes in gradients and offsets.
    - The drawings shall incorporate information shown on standard drawings WIL-DET-22-22 AND WIL-DET-22-23. In addition, the manufacturer, make and model of the following must be provided:
        - Pipe (mains, services & fire hydrant leads)
        - Joint Restrainers
        - Fire Hydrants
        - Valves
        - Curb Stops
        - Main Stops
        - Saddles
        - Wrapping Products (paste, mastic and tape)
        - Anodes
        - Tracer Wire
        - Pipe Fittings
        - Water Boxes (curbstop at property line)

Where watermains are not within road allowances or near sewers, ties to property corners, buildings/hydro poles, etc shall be used.**As-Recorded Drawings**

“As Recorded” Drawings constitute the original engineering drawings which have been plotted again to show “As Recorded” conditions. The “As Recorded” drawing and a copy of the

AutoCAD drawing files on a USB shall be submitted to the *Public Works and Engineering* for permanent records. Provide drawings in Civil 3D and also exported to AutoCAD.

As-Recorded Field Survey

The "As Recorded" Records revisions shall be based upon an "As Recorded Records" survey of all the proposed services installed including previous phases to 20m beyond the phasing limit.

Refer to Section **Error! Reference source not found.**.8 for more information regarding Survey drawing requirements.

As-Recorded Records Drawings

The "As Recorded Records" drawings for all Municipal Services shall incorporate all revisions found in completing the "As Recorded Records" field survey and include a check of the following items but not limited to and incorporation of the necessary revisions:

- Identify General *Contractor* and any Sub-*Contractor*s involved in the works;
- Substantial performance date, contract completion date, start of warranty period and end of warranty period;
- Date of subdivision registration
- Date of installation of the following:
    - Storm Sewer
    - Sanitary Sewer
    - 3rd Pipe
    - Watermain
    - Road Pavement (Granular A, Granular B, Base and surface asphalt);
    - SWMF
- Sewers - Percent grade, pipe size, type, class, bedding and length;
- Invert elevations – sewer at maintenance holes, at plugs for future extensions;
- Top of pipe and/or invert elevations – watermains, where necessary (i.e. Where watermain has been varied from normal depth requirements) in filed, to avoid conflict with other buried services;
- Obvert of watermain and sanitary sewer at centreline of water crossing;
- Note: Original design information (inverts, grades, etc.) are to be removed from the drawing and replaced by the "As Recorded" Records information;
- Pipe type, class and bedding;
- Service connections at street line – sanitary, storm and water;
- Label "As Recorded Records Drawings" (shown in revisions column with date), and on cover sheet;
- Registered Plan Number is to be shown on plan view of each drawing including general plans;
- Lot and block numbers shall be in conformity with the registered plan;

- Street names shall be in conformity with the registered plan / project name or as accepted by the *Township;*
- Benchmark;
  *Easement*s to be shown with *Easement* numbers; and a table indicating the manufacturer, supplier, model number and material for each sanitary, storm 3rd pipe and water structure installed;
- Deleterious / Contaminated material left in the R.O.W. on Capital project as per regulations.

1.10 Fees and Securities

Cost Estimate

A detailed itemized cost estimate for the construction of all *Works* (earthworks, erosion and sediment control, municipal drains / channels, right of way surface works, SWMF, temporary works, wet utility servicing, parks, monuments, trails, lighting, etc) including 15% contingency, 15% Engineering and HST is required along with a breakdown of any items designated to be cost-shared (if required). A general summary is also to be provided as shown in the form attached in appendix

A proposed construction schedule for all construction activities is to be provided to the *Township* with the cost estimate. During the progress of the work, any revisions to the original schedule shall be forwarded to the *Township*.

Engineering Fees

The total Subdivision Engineering *Fees* for all construction *Works* shall be provided to the *Township Public Works and Engineering Department* and to be determined as a percentage of the final estimated construction costs. The Engineering fee percentage to be used is stated in the Fees and charges bylaw. The engineering fee estimate is based on assets the Township will own and maintain including earthworks. These *Fees* shall cover *Public Works and Engineering Staff* processing / administration time, design review, and engineering inspection time, initial acceptance inspection, *Assumption* and end of warranty as per the fees and charges bylaw. Maximum 2 visit for the acceptance and 2 visits for he assumption process are included in the fees and charges bylaw.

Initially the *Consultant* will determine the preliminary construction cost estimate including 15% contingency and 15% engineering at the time of first engineering drawing submission. Half of the total cost estimate will be submitted to the *Township Public Works and Engineering Department*, in the form of a cheque made payable to the *Township* along with the first submissions drawings and inaddition any *Peer Review estimate cost* and outstanding payments as required.

Prior to final acceptance of the engineering drawings, the *Consultant* shall provide a final estimated construction cost. The remaining Engineering *fees* to be submitted to the *Township* Public Works and Engineering Department is calculated as per the fees and charges bylaw of the final Engineers estimated cost less the Engineering *Fee* paid upon first submission drawings. Any additional *Peer Review costs and other* outstanding payments as required are to be delivered in this final package.

Once the tender and contract is finalized and the *Subdivider* has decided on their *Contractor* and *Contractor* pricing is complete. Final contract documents are to be submitted to the *Township*.

Letter of Credit

As part of the Subdivision *Agreement*, the *Subdivider* is to deliver an irrevocable Letter of Credit from a Chartered Bank in an amount satisfactory to the *Township* or other *Security* satisfactory to the *Township* in order to guarantee the completion of the *Works* referred to in the *Agreement*. This amount includes:

- 100% of the total estimated and / or actual costs for underground services
- 100% of the total estimated and / or actual costs for surface *Works*
- $1000 / lot for lot grading / street sweeping security

The total estimated cost for the *Works* must show an engineering allowance of 15% and contingency allowance of 15% and include HST. The contract documents between the *Subdivider* and its *Contractor* engaged to install the services shall provide for Performance and Maintenance Bonds in the amount of 100% of the contract value and the *Subdivider* shall provide the *Township* with proof of such bonding.

Letter of Credit Reduction Process

The irrevocable Letter of Credit may be reduced from time to time as the work is completed and accepted by *Public Works and Engineering Staff*. The process for Letter of Credit reduction is outlined below and within the Fees and charges bylaw. Reductions of the Letter of Credit shall occur as a result of successful Initial and Final Inspections, adequate documentation and description of the infrastructure assets to be released throughout the *Development*.

<u>Initial Reduction</u>

The initial reduction of the Letter of Credit shall be to no less than 15% of the total value or to $25,000, whichever is the greater and shall occur after the initial acceptance of the *Works*. Reductions less than $25,000 will NOT be processed and will be returned to the *Consultant* unless otherwise accepted by the *Township* prior to the request.

Only two (2) reductions to the Letter of Credit per stage will be permitted a year. See Fees and charges bylaw for each letter of credit request for processing.

The *Subdivider* may request the Letter of Credit be reduced to 15% of the accepted *Works*, and outstanding underground and aboveground *Works* be adjusted to 110%. The remaining balance of the Letter of Credit will be reduced. The minimum value of a Letter of Credit to be held shall not be less than $100,000.

At no time shall *Security* be reduced to an amount equal to the estimated cost of the *Works* and Services remaining to be completed and maintenance *Ssecurity* requirements as provided by the *Engineer* and verify by the *Public Works and Engineering*. Unit prices for items may need to be adjusted periodically to reflect current market conditions.

In order to reduce the Letter of Credit, the *Consultant* must provide a Letter of Credit Reduction Request package which contains the following documentation but not limited to:

- Written letter requesting the reduction in Letter of Credit
- Subdivision name including appropriate stage and phase
- Initial and Final acceptance summary spreadsheet
- Detailed background information in the form of an itemized calculation spreadsheet on an item by item, street by street basis;
- Any acceptance letters pertaining to the specific requested Letter of Credit reduction.
- Resident complaints and concerns tracking form to be submitted
- Infrastructure issues that were rectified throughout the warranty period
- Any outstanding monitoring to be done I&!, SWMF, receiving water course, groundwater, etc

Final Reduction

The final reduction of the Letter of Credit shall be to zero dollars and shall occur after Final Acceptance has been issued by the *Public Works and Engineering*. Final inspections on items can only be requested but not limited to at a minimum of two (2) years after the initial acceptance date, after the *Maintenance Period* has expired, all documentation provided, correction of deficiencies, and outstanding work completed, etc.

Once the final acceptance letter has been received the process for requesting the Letter of Credit reduction can commence similar to the Initial Reduction above.

Reductions less than $25,000 will NOT be processed and will be returned to the *Consultant* unless it is approved by the *Township* prior to the request.

Stormwater Management

Where a new subdivision will outlet to an existing or proposed SWM pond, a cleanout maintenance *Security* will be required, and will form part of the *Subdivider*'s Letter of Credit.

The amount required for the maintenance *Security* will be the *Engineer*'s estimated cost to clean out the pond two (2) times. Additionally, new subdivisions outletting to an existing SWM pond will be required to add the estimated cost to flush the storm sewers up to the SWM pond two (2) times.

Where multiple *Subdivider*s are responsible for the maintenance of the same pond, a *Subdivider* who has reached 95% build out can go through the pond acceptance process, or enter into an *Agreement* with all other *Subdivider*s to be released of their pond maintenance obligations. By entering into the *Agreement*, the *Subdivider*s agree to clean out the absolved *Subdivider*'s sediment from the pond and pipes. Further, the other *Subdivider*s must have pond maintenance *Security* posted with the *Township*.

The *Subdivider* shall install all *lands*caping on SWM areas above the five (5) year storm level in accordance with the approved plan, during the first planting season after occupancy of the first unit.

Prior to Final Acceptance the following conditions must be met but not limited to:

- Flush / CCTV of the sewers / laterals
- Clean out of the SWM pond after 95% buildout. (Provide as-recorded elevations to *Township Public Works and Engineering*)
- 2 years of performance monitoring after 95% buildout has been reached and clean out completed or as directed by the MECP
- Satisfactory inspections from the *Public Works and Engineering*.
- Installation of property bars / monuments

At 95% build out of the catchment area, the pond must be surveyed and cleaned out. After the pond has been cleaned out, the minimum two (2) year performance monitoring of the SWM pond can commence. At this point the *Consultant* may request to have the pond cleanout *Security* reduced from two (2) cleanouts, to one (1).

After review of satisfactory monitoring results and prior to Final Acceptance, the pond must be cleaned out (not hold accumulated sediment), and *lands*caping below the five (5) year storm level can be planted. All items in the SWM Block (underground and surface *Works*) are to be inspected as a whole, for Final Acceptance. SWM pond undergrounds will require an updated CCTV inspection, and as-recorded survey submission at Final Acceptance.

Where SWM facilities require seasonal valve operation, the *Subdivider* is responsible to operate the valves during the *Maintenance Period*.

Obligations during the *Maintenance Period*

The *Subdivider* shall make good in a permanent manner satisfactory to the *Township*, any and all damage to the work during the *Maintenance Period*. Any deficiencies or defects noted during the *Maintenance Period* are the responsibility of the *Subdivider* and all complaints and

concerns will be deferred to the *Consultant* for tracking and resolution. This shall be on an ongoing basis throughout the terms of this *Agreement*. The *Subdivider*, on receiving either written or oral notification from the *Public Works and Engineering Department* that *Works* are required, shall immediately undertake such necessary work. If the *Subdivider* fails to comply, the *Township* may arrange for such work to be undertaken at the expense of the *Subdivider*. The monies for this work may be drawn from the *Security* under the subdivision *Agreement*.

The *Subdivider*'s obligations include, but is not limited to, the following:

- Shall maintain or cause to be maintained all underground and surface *Works* and every part thereof in working order and in good repair for a period of not less than two (2) years from the date of the *Maintenance Period* acceptance.
- Regardless if the underground sewers have received final acceptance, the *Subdivider* shall be responsible for sewer flushing maintenance until initial acceptance of the surface asphalt.
- *Subdivider* will ensure that storm sewer system, which includes catchbasins, maintenance holes, infiltration trenches, soakaway pits and other quality control features, and appurtenances are in a satisfactory working condition and free from debris, silt etc. Should the efficiency of the storm sewer become reduced due to building activity the *Subdivider* shall be responsible for any cleaning, flushing etc. necessary to restore the storm sewer to full capacity for the duration of building activity. If the *Public Works and Engineering* determines a *Subdivider* is not ensuring that the storm sewer is kept free of debris, silt, due to builder activity, an email to correct the defect will be sent to the *Subdivider*. If the storm sewer is not cleaned within five (5) business days, the *Public Works and Engineering* will arrange to have the storm sewer cleaned, and the work will be invoiced to the *Subdivider* or deducted from the letter of credit or cash deposit.
- The *Subdivider* shall maintain all road allowances, lots and blocks within the vicinity of the *Works* within the subdivision free of mud, dust, litter, construction debris, construction materials and obstruction that may occur directly or indirectly on account of construction or illegal dumping by others within the subdivision. The *Subdivider* will also ensure that abutting streets affected by the subdivision activity are also cleaned when they have been impacted. *Public Works and Engineering Staff* will inspect the road condition on a periodic basis and/or on a complaint basis. If it is determined by the *Public Works & Engineering* that the *Subdivider* is not adhering to the street sweeping requirements the *Subdivider* will be notified by the *Public Works and Engineering Department* to clean the streets. The *Subdivider* will have 48 hours to comply with the directive. Should the Public Works and Engineering Department deem it necessary to respond to a cleanup of the subdivision streets and / or abutting streets after having notified the *Subdivider*, this work will be invoiced to the *Subdivider* or deducted from the letter of credit or cash deposit.
- The *Subdivider* shall maintain or cause to be maintained, all surface and *lands*caping *Works* and every part thereof in acceptable order and in good repair for a period of not less than two (2) years from the date of the *Maintenance Period* Acceptance.

- The *Subdivider* shall maintain or cause to be maintained, all *Lands*caping *Works* (including boulevards adjacent to open spaces, trails, SWMF and parks, and street trees) and every part thereof in acceptable order and in good repair for a period of not less than two (2) years from the date of the *Maintenance Period* Acceptance to the satisfaction of the *Public Works and Engineering Department*. It is recognized that within a subdivision, there may be a variety of *Maintenance Period* Acceptance dates.

Note: The standard *Maintenance Period* is two (2) years, however the *Township* reserves the right to extend this term if and where significant deficiencies have existed and been left unattended or repairs have not been made to the satisfaction of the *Township*.

Perpetual Maintenance *Fees*

The *Township* shall collect 'Perpetual Maintenance *Fees*' from *Subdivider*s when a Subdivision *Agreement* is entered into for landscape design elements placed on *Township* Property. These '*Fees*' are required to offset costs of long-term maintenance, potential removal, and/or replacement. Maintenance *Fees* will be applied to design elements in the landscape and noise wall features, including but not limited to, subdivision entry features/walls, decorative perimeter fencing, and planted traffic is*lands*.

The '*Fee*' will be held specifically to pay for maintenance, removal and/or replacement of those elements ultimately assumed by the *Public Works and Engineering Department*. The '*Fee*' amount is based on 100% of the construction costs. The '*Fee*' will be collected as cash or certified cheque, and will be non-refundable. The *Township* will have the ability to remove the design element in the event that, after *Assumption* of the Subdivision, the design element maintenance costs are exceeded. Warning clauses in purchase and sale *Agreement*s are necessary to ensure the future Home*Owner* is made aware of this.

Any of these elements must be itemized separately within the landscape cost estimates.

The *Subdivider* is required to maintain these landscape elements until the subdivision servicing is completed and all lots within the subdivision are sold to the first home purchaser/occupant and/or end of warranty period whichever is greater. At that time the *Township* will assume maintenance responsibility.

All tree planting for landscape design elements will meet all tree and soil habitat zones requirements as identified in this Manual.

Section 2 – Engineering Requirements for Subdivisions

2.1 Submission Requirements

2.1.1 Engineering Submission ProcessIn general, the following but not limited to, is the process for submitting Engineering documents in support of a Development Application for review by the Township Public Works and Engineering Department. All submittals to be sent to the Township's Development Services Department for distribution;

- Pre Submission Meeting
- Functional Plans and Reports Submission
- 1st Engineering Submission
- 2nd Engineering Submission
- Final Engineering Submission
- Township Acceptance

Note: Subsequent submissions beyond the 3rd submission may be necessary and may be subject to additional review fees.

Prior to the first engineering submission, please contact the Develoment Services Department to arrange a pre-submission meeting Public Works and Engineering Staff to review the engineering requirements in detail. An incomplete engineering submission will be returned without a complete review and comments. This can result in unnecessary and avoidable time delays.

Unless otherwise discussed with *Township Public Works and Engineering staff*, the following is a list of information required for the 1st Engineering Submission but not limited to:

- Reference Plans
- General Above Ground Services Plan
- General Underground Services Plan
- Storm Drainage Plans
- Storm Sewer Design Sheets
- Stormwater Management Report
- Sanitary Drainage Plans
- Sanitary Sewer Design Sheets
- Staging Plan
- Plan and Profile Drawing
- Miscellaneous and Special Detail Drawings (i.e. road cross sections, detailed drawings for outlets and watercourse improvements)
- Grading, Sediment / Erosion Control, Topsoil Storage Plans
- Traffic Management Plan (pavement markings, signage, on street parking, etc)

- Signage Plan
- Composite Utility Plan (Telecom, gasmain, hydro, street trees, retaining walls, fences, stm/san/wm surface features)
- Street lighting plan
- Streetscape/Landscape Plans
- Geotechnical Soils Report
- Underside of Footing to Groundwater Comparison Plan
- Phase One Environmental Site Assessment
- Traffic Impact Study
- Draft Agreement Schedules
- Noise Report
- Proposed Plan for Registration (M-Plan)
- Tree Survey Plan and Arborist Report
- A letter of Retention from the Consulting Engineer stating that they have been engaged for the design and complete general construction supervision of all municipal services
- A copy of the Consulting Engineer's letter to the Region of Waterloo forwarding the 1st engineering submission in accordance with their requirements
- Proof of payment of any applicable fees

Unless otherwise discussed with *Public Works and Engineering Staff*, the following is a list of information required for the 2nd Engineering Submission but not limited to:

- All first Engineering Submission plans, drawings and reports that were marked up by Public Works and Engineering Staff as part of the 1st Engineering Submission Review.
- A comment response matrix explaining how each outstanding comment has been addressed
- All revised materials which must satisfactorily address the 1st Engineering Submission Comments

If a Stormwater Management Facility is included;

- Stormwater Management Pond Planting Plans prepared and stamped by a Landscape Architect, including detailed drawings, pond plant list and detailed cost schedule for the proposed landscaping works
- A copy of the MOECP Envirnmental Complaiance Approval applications, which myst be signed by the Owner and Consulting Engineer

Final Engineering Submission

- Complete set of drawings and reports
- One set of mylars of all drawings listed in the Agreement
- An original Letter of Credit for the approved securities as per Schedule D of the Agreement

- Original Certificates of Insurance as per Schedule D of the Agreement
- Written confirmation from the Region of Waterloo that includes a final approval letter for municipal works and payment confirmation of required fees and contributions
- A copy of the final M-Plan signed and dated by the Owner
- A Street numbering (address) Plan
- Asset management data in an Esri compatible format. Once the proposed data is incorporated into the Township GIS, Asset Numbers will be provided by the Township

A letter from the Ontario Land Surveyor certifying that the final M-Plan has not been changed since the Zoning By-law came into effect.

Original Drawings and Engineering Drawing Requirements

The latest revision of the Ontario Provincial Standard Drawings (OPSD) and Specifications (OPSS) MUNI must be used unless otherwise specified in this document. A list of OPSS and OPSD along with *Township* standards used is to be included as part of the engineering drawings for all submissions to *Township Staff* and must be referred to by number on the affected plan and profile drawings. All designs are to be in accordance with this document and the Region of Waterloo Design Guidelines and Supplemental Specifications for Municipal Services (DGSSMS).

The *Engineer* / Applicant shall be responsible to check the suitability of the details provided on these standard drawings for the proposed application. Site Specific details shall be provided by the *Engineer* / Applicant for all special features not covered by the Ontario Provincial Standards.

Site Specific individual details shall be drawn on standard size sheets and shall be included as part of the engineering drawings. The minimum scale to be used for any maintenance hole or sewer detail shall be 1:50.

Upon receipt of all approvals and / or *Acceptance* from all affected agencies, the original drawings shall be submitted to *Township StaffPublic Works and Engineering*. These originals shall be signed and dated by *Public Works and Engineering Staff* indicating the *Acceptance* and returned to the *Engineer* / Applicant. No changes or revisions may be made to the drawings after being signed by Public Works and Engineering *Staff* unless written authorization is provided by *the Director of Public Works and Engineering*.

If, after one year from the date of the original *Acceptance* of the engineering drawings by the *Public Works and Engineering Staff*, the *Subdivider* / *Developer* fails to enter into a *Development Agreement* with the *Township*, or the work has not been initiated, the Public Works and Engineering Department reserves the right to revoke all permits and/or *Acceptances* related to the engineering drawings.

2.1.3 Drawing Standards

General

All engineering drawings shall be prepared in a neat and legible fashion and to the satisfaction of the Director of Public Works and Engineering. The information presented on these drawings shall be completed using a computer aided drafting program (i.e. AutoCAD current within 3 years).

All General Services Plans, *Municipal Drain* Plans, catchment area plans, *Municipal Consent* plans, Plan and Profile Drawings, Grading Plans and Detail Drawings, etc. shall be prepared and submited on standard D size sheets.

Each individual drawing must give clear instructions / context as to the materials, methods and details of the design and constructability of the services.

Each drawing shall include the following but not limited to;

- The lot numbering and block identification in accordance with the Registered Plan and *Easement* number / PIN # shall be shown on all engineering drawings.
- All elevations shown on the engineering drawings are to be related to UTM 17N NAD 83 Geodetic datum. Refer to Section 1.8 for further information.
- All plan and profile drawings are to be prepared so that each roadway can be filed separately. Road names shall be identified on the plan portion of the drawings.
- When the roads are of a length that requires more than one drawing, match lines are to be used with no overlapping of information.
- The reference drawing numbers for all intersecting roads and match lines shall be shown on all plan and profile drawings.
- A title block depicting the drawing number, drawing title, date, date of revisions, and scale of the plan in metric units shall be on all drawings.
- A north arrow shall be referenced on all drawings as well as construction north.
- The name and contact information for the *Consultant* for the project.
- All engineering drawings must be stamped and signed by a Professional *Engineer* Registered to practice in Ontario.

AutoCAD Drawing Standards

- The drawing scale for plan and profile drawings shall be in metric, using a scale of 1:500 horizontally and 1:50 vertically. A scale of 1:250 horizontally should be used in congested areas.
- Drawings shall be oriented such that North points up and/or to the right (or left if required).
- Dimensions and elevations shall be provided in metric units.

- Existing conditions are to be shown on a separate plan and shall appear faded in comparison to the items which are to be removed. The final copy should use a text size of 1.6mm.
- The various utility lines (telecom, hydro, gas, etc.) should be identified and appear slightly darker than existing topography.
- Proposed work should appear heavier than existing conditions, and use a text size of 2.0mm for notes, elevations and dimensions.
- All similar line work and text should be drawn using a layer, colour and line type named to easily identify the linework and text.

2.1.4 Engineering Functional Submission

Where the *Township* requires a Functional Servicing Report (FSR) to be completed, this guideline shall be followed but not limited to. A FSR will address the impacts of the proposed *Development* on, but not limited to, servicing, grading and drainage, water quality or quantity, hydrogeology, geotechnical, traffic, environmental features, project constraints or technical issues including potential impacts to adjacent properties including the right of way. The functional design report must provide sufficient information to confirm that the proposed *Development* is feasible, the existing *Township* / Region infrastructure is sufficient for the proposed demand and usage of the system.

Prior to the commencement of the design and the FSR, it is recommended that the *Developer*'s Professional Consulting *Engineer* / Planning *Consultant* shall determine the report scope with the *Township* and discuss the requirements and any other relevant studies that might be required (Pre-Study Conference).

The Functional Servicing Report shall provide, as a minimum, all details, calculations, costs, alternatives and recommendations necessary to facilitate logical and appropriate decision-making. Preliminary engineering review of the functional design and other studies as required may indicate inadequate servicing capacity; other critical issues that may require an alternative approach to site *Development*; or, that may impact the viability of the project. The scope and requirements of the functional servicing study as it relates to *Township* infrastructure will be at the discretion of the Director of Public Works and Engineering.

The report shall provide all relevant background information with respect to Site Constraints / Existing Conditions such as but not limited to:

- Topography and drainage
- All pipelines (Trans Canada, Enbridge, etc.)
- *Easement*s / corridors
- Main sewer lines and watermains
- Utilities
- Environmental features (protected watercourses, terrestrials, etc.)
- Road Corridor Network

The functional servicing report should include, but will not necessarily be limited to the following considerations:

- Concept Plan
- Contour Plan
- Existing Conditions Plan
- Existing *Easement*s / legal plan
- Phase 1 and 2 Environmental Site Assessments
- Water well interference studies
- Tree clearing and grubbing plan
- Tree Preservation Plan
- Trails / Walkway plans
- General Plan of Services
- Drainage and Erosion Control Plan
- Lot Grading Plan
- Geodetic Benchmark / Demarcation post plan
- Geotechnical Investigation
- Hydrogeological Investigation / Groundwater Contour Plan
- Major roadway alignments, cross-sections and intersections;
- Roadway structures / roundabouts;
- Watercourse improvement and channelization;
- Railway crossings;
- Parkland *Development*
- Major sewer lines, storm and sanitary;
- Storm drainage systems, including over*land* flow routes and outlets;
- Storm water management plan / reports
- Sanitary drainage systems, including assimilative capacity analysis of the receiving system (if applicable);
- Landscape / vegetation plan
- Water distribution systems, including independent pressure zones and flow testing of the existing systems and network modelling;
- Detail plans
- Pumping station locations;
- Photometric
- Traffic Impact study
- Traffic Plan showing parking, line painting, signage

In cases where the subdivision *Development* under consideration forms part of a larger area set aside for future *Development* or potential in the fullness of time, the functional servicing report shall be a requirement in order to confirm that the servicing design will allow for orderly and efficiently planned future *Development* visioning. The functional servicing report shall be signed and sealed by a professional *Engineer*. The relevant studies related to a particular *Development* will be outlined in consultation with *Township Staff*, outside agencies and other interested parties, and will be required as conditions of planning or engineering approval.

All engineering drawings included in the functional engineering design submission must be fully coordinated with all other drawings in the *Land Development* application submission. Functional Servicing Report submissions containing uncoordinated drawings and missing information will be returned to the applicant before further review work proceeds.

2.2 Engineering Submission Requirements

2.2.1 Cover Sheet

A cover sheet shall be provided and include the following but not limited to:

- Name of the Capital, *Municipal Consent* and/or *Development* project;
- Name of the *Municipal Drain* / *Municipal Consent* / *Subdivider* / *Owner* / *Developer* and contact information;
- *Township* logo;
- Name of the *Consultant* and contact information;
- Key Plan at scale of 1:10,000 indicating the location of the proposed *Works* and the proposed infrastructure alignment;
- Index to all drawings in the set indicating drawing number and title;
- Draft Approvals (30T and 58M, 58R plan numbers if applicable), and
- Submission description i.e. 1st Submission, 2nd Submission, etc.

2.2.2 General Plan of Services

A General Plan of Services shall be prepared for all subdivisions, site plans, condominiums and large *Municipal Consent*s and include, but not limited to, the following:

- the general overall scope of the project and the geographic relationship to surrounding *Lands*.
- a scale of no greater than 1:1000
- When more than one General Plan of Services drawing is required for any *Development*, the division of drawings shall reflect the limits of the Registered Plans as closely as possible.
- Location and description of all available benchmarks, the reference Geodetic Bench Mark and the Site Bench Marks to be used for construction shall be identified on the General Plan of Services. Iron property bars are not acceptable construction benchmarks. Refer to Section **Error! Reference source not found.**.8 for more information.
- A Key Plan and the area covered by each drawing shall be clearly identified within the Key Plan.
- Road allowances, lots, blocks, *Easement*s and reserves are to be shown and are to be identified in the same manner as the Registered Plan.

- Existing services, dry utilities and abutting properties are to be shown and flow direction of wet utilities.
- All proposed services to be constructed are to be shown.
- All sewers are to be shown and labelled with length, size, pipe class, material and flow directions.
- Sewer maintenance holes and catchbasins are to be shown and numbered in accordance with the *Township*'s numbering system.
- All watermains, valves, hydrants, reducers, tees and blow-offs, etc. are to be shown. Watermains are to be identified by size and material.
- All curb and sidewalks are to be shown.
- All fencing to be indicated by the height and type of fence.
- All street light poles and transformers are to be shown.
- Registered Plan number must be shown on the As-Constructed General Plan of Services.
- All site details for parks, schools, institutions, commercial and industrial *Development*, etc. must be shown.
- If a subdivision / site plan / infill lot encroaches on an existing floodplain, the approved fill lines and restrictions must be shown, as specified by the conservation authority.
- Community mail box locations must be shown on the As-constructed General Plan of Services.

2.2.3 Plan and Profile Drawings

General Requirements

Plan and Profile Drawings shall provide sufficient detailed information required for construction of roads, municipal services and future maintenance of the assets.

Plan and Profile drawings are required for all roadways, blocks and *Easement*s within Capital, *Municipal Drain* and *Development*, for all outfalls beyond the project to the permanent outlet, for all boundary roadways abutting the project and for other areas where underground utilities are being installed.

- All plan and profile drawings are to be drawn at scales of
  - 1:500 horizontally
  - 1:50 vertically
- The sanitary, storm and watermain profiles shall be drawn so that each street and *Easement* may be filed separately;
- Refer all datum to a bench mark of geodetic origin;
- Show all existing and proposed lot numbers, addresses and blocks;
- Show all existing and proposed curbs, road allowances and street names and indicate them as such;
- Show all existing sidewalks, walkways, and trails;

- Where two or more sheets are required for one street, match lines must be used with no overlaps;
- Where intersecting streets are shown on a plan and profile drawing, only the diameter of the pipe and direction of flow of the intersecting sewers are to be shown. This also applies to *Easement*s for which a separate plan and profile drawing has been drawn;
- Pavement designs for the particular roadway are to be indicated on each plan and profile drawing;
- The detail information from all the borehole logs is to be plotted on the profile and located on the plan. Borehole information shall contain a borehole location plus a brief description of soils and the water level;
- Where roundabouts are proposed, a plan and profile drawing shall indicate detailed design dimensions including radius, lane width, etc.;
- Profiles of roadways shall be produced sufficiently beyond the limits of the proposed roads, to confirm the feasibility of possible future extensions and grading details, etc.;
- The basement elevation of all existing dwellings on the streets where sewers are to be constructed shall be noted.

Plan View

The following information and details are to be included, but not limited to;

- Street names,
- Block/lot number and frontage dimension,
- Block/lot type (single, semi, multiple),
- Servicing locations for storm, sanitary and water, ditches and swales, etc.
- All existing (as needed) and proposed sewers and watermains, maintenance holes, catchbasins,
- Third pipe systems
- Valve chambers,
- Hydrants,
- Sidewalk,
- Setback of proposed driveway to above ground structures (poles, signs, pedestals, etc.
- Centreline chainage (every 20.0 m) noted by a point or small cross,
- Road allowance and pavement dimensions,
- Driveway locations,
- Curb radii,
- *Easement*s,
- Reserves,
- Road sections where clarification is required,
- Detail gutter grades on large radius bends, roundabouts and cul-de-sacs (minimum 1.0%). Details of the gutter grades around all 90 degree bends, crescents and cul-de-sacs shall be provided on plan view as a separate detail at a scale of 1:250,
- Light standard and transformer locations.
- Above ground utility pedestals

- The type, slope, diameter and grade of the sewers are to be indicated on the Plan view.

Profile View

The following information and details are to be included, but not limited to;

- The type of underground service (existing and proposed watermain, sanitary, storm, water), the diameter, length, material grade and class of pipe. The watermain shall be plotted to true scale size on the profile view;
- All of the proposed services, utilities and features are to be shown on the plan view. Those services and utilities below grade that are critical to the new construction shall also be shown in the profile. Test holes may be required to determine actual elevation of these services and utilities;
- Service connections where possibility of a conflict with other services exists,
- road profile, existing and proposed. All structural fill areas are to be identified and shaded;
- original ground elevation at centreline and the proposed centreline road grade. The proposed centreline grades shall be fully labelled including length, grade, P.I stations and elevations, etc.;
- centreline chainage and elevations. Indicate the elevation at grade changes and provide the slope and length of each section. The P.I., B.H.C., E.H.C., B.V.C., and, E.V.C. chainages shall also be noted;
- vertical curve data on the top of the profile view;
- existing (as needed) and proposed maintenance hole information, pipe inverts at entry and exit, catchbasin lateral inverts, drop structure details. Indicate safety platforms and elevations where required;
- Provide detailed information for all outfalls external to Capital, *Development* Infrastructure, and *Municipal Drains*, and
- Borehole data including soils and water table.
- Hydraulic grade line
- Minimum basement elevations
- Pipe crossing clearance
- Match lines

2.2.4 Lot Grading Plan

The following information and details are to be included, but not limited to;

- Key plan indicating the area of the proposed *Development*;
- Drawings at a scale of 1:500;
- Legend including all symbols and elevation formats shown on the plan,
- North arrow;
- Street names of all roads within and bordering the proposed *Development*;
- Lot numbers, plan numbers or municipal addresses;

- All existing and proposed *Easement*s;
- All elevations shall be referred to the geodetic metric datum (NAD83);
- Existing contours to be shown at a maximum interval of 0.5m, and shall extend a minimum of 20m beyond the limits of the property/*Development* depending on neighbouring features.
- Borehole locations with stabilized groundwater elevations;
- Locations of catchbasins, maintenance holes, hydrants, valves, streetlights, transformers, telephone pedestals, sidewalk walkways, mailboxes and hydro poles;
- Defined limits of tree preservation in accordance with the approved Tree Preservation Plans;
- Previous phase as constructed elevations to 20m beyond phasing boundary
- Location of existing and proposed buildings, including those on adjacent *Lands*;
- Proposed building envelopes
- Proposed driveways
- Proposed ground elevations at the front and rear of the building envelope;
- Top of foundation wall for proposed structures
- Maximum underside of footing for buildings beside underground service leads
- Details showing the style of the proposed lot grading, with detail for each style indicating orientation, typical relative high point, overall slope through the property limits;
- Proposed and existing elevations at lot corners;
- Intermediate grade change points;
- Direction of flow on lot lines;
- Any underground drainage must be identified;
- Identify all lots where *Engineer*ed fill has been placed or will be placed;
- Surface water runoff for all lots and roadways indicating direction of flow;
- Location and grade of swales;
- Water courses and drainage ditches;
- Typical grading cross-sections for all distinct lot drainage and configurations;
- Proposed centerline elevations, road grades and right of way limit elevations at 20m intervals along roads;
- Crossfall for boulevards;
- Retaining walls, top and bottom elevations, locations and materials;
- Well and septic locations (if applicable); including dimensions for septic locations;
- Entrance locations to the property and adjoining properties as well as those on the opposite side of roadways;
- Low Impact *Development* features
- Location of any Railway Lines or Pipe Lines, showing all offsets;
- Area regulated by Conservation authority with *Development* setbacks (if applicable)

2.2.5 Detail Plan

A Detail Plan will be required when there is not sufficient space on the Plan and Profile Drawings or other drawings to fully describe the necessary *Works*. See examples below;

- A Typical road cross section shall be shown on the Detail Plan, illustrating R.O.W. dimensions, pavement structure, sewer and watermain locations, curb and sidewalk locations, and proposed utility locations.
- Swales / ditches details to be shown
- Legal outlets to be noted
- *Easement*s / reference plans to be shown
- Details of special chambers, such as metering chambers shall be shown.
- Details of special structures, such as storm sewer inlets and outlets or retaining walls shall be shown.
- Details of special drainage features, including stormwater retention/detention ponds shall be shown.
- Pumping station details shall be shown.
- Service connection layout
- Any other details or notes as required shall be shown.
- Silt fence detail.
- Grading details and engineering details shall be shown on separate drawing sheets. Grading detail drawings shall include details with respect to lot grading type, swales, etc. while engineering details drawings shall include maintenance hole types, infrastructure details etc.
- Lot grading plan shall also include groundwater elevations, indicate major flow routes, direction of drainage / swales, regulatory flood line elevations as well as existing drainage directions. **In order to more clearly show all details of groundwater, a separate Underside of Footing and Groundwater Separation Plan can be included.**

2.2.6 Storm and Sanitary Drainage Plans

A separate drainage area plan for storm and sanitary drainage shall be prepared. The external drainage area plan shall be prepared and shall be submitted to the *Public Works and Engineering Department* at the functional report stage and prior to the commencement of the detail storm sewer design. In the case of large areas under single *Owner*ship and/or blocks requiring future Site Plan *Agreement*s, the design shall be prepared on the basis of the whole area being contributory to one maintenance hole in the abutting storm sewer. If more than one private storm connection is necessary to service the property, the appropriate area tributary to each connection shall be clearly shown and taken into account in the storm sewer design.

The following information and details are to be included, but not limited to;

- The street and lot layout of the subdivision, street names and property descriptions.

- All existing and proposed sewers, maintenance holes, catchbasins shall be shown and labeled with identifying numbers, sizes, lengths, grades and direction of flow.
- In cases of Capital and *Development* Infrastructure projects, the *Consultant* is required to establish the geodetic invert elevations and ties of all sanitary / storm sewer connections at street line and to make this information available on the as constructed plans to the Public Works and Engineering Department
- All external areas. If the external drainage areas are too large to be accommodated, a separate drawing for the external drainage areas shall be included in the set.
- Storm drainage areas shall be delineated on an actual contributing drainage area and maintenance hole to maintenance hole basis. The actual contributing drainage area, storm services, roof area shall be evaluated in the upstream storm sewer from where the services are connected to.
- Sanitary drainage areas shall be delineated on a lotline by lotline and maintenance hole to maintenance hole basis.
- All drainage areas shall be numbered and shall include area in hectares, run-off coefficients for storm or population densities for sanitary in accordance with *Township* standards.
- The design sheets (excel and pdf) shall be included with the submission of the storm and sanitary drainage plans.

Storm Drainage Plans are to be drawn to a scale of 1:1,000 or larger. If large external drainage areas affect the *Municipal Drain*, *Development* Infrastructure, *Capital Project*, a separate External Drainage Area Plan is to be produced. The Plan is to be produced to a scale of 1:5,000 and is to indicate the total area to be drained by the proposed storm sewers.

- The following information and details are to be included, but not limited to; existing contours (0.5 m intervals). Extend contours a minimum 20 m past site boundary or to the limits of sufficient distance to clearly indicate the contributing area;
- Existing culverts, ditches, drains
- Drainage patterns of adjacent *Lands* and a breakdown of contributing external areas;
- The run-off coefficients and area of tributary areas internal and external to the *Development* for each section of the storm sewers within the *Development*;
- Direction of run-off (over*land* flow, depth/velocity to meet MNRF/GRCA);
- Street names;
- Maintenance hole and Catchbasin numbers;
- Sewer sizes – Diameter, material, length;
- Directions of flow in the sewers;
- Any infrastructure off of the right of way to be accepted by the Public Works and Engineering Department and / or drainage patterns to be maintained by homeowners e.g. rear lot catchbasins or swales, *Municipal Drains*, on lots, parks or blocks, required to accept storm runoff, and
- Complete major and minor storm systems.
- Label legal outlets
- Proposed and existing *Easement*s

Sanitary Drainage Plans are to be drawn to a scale of 1:1,000, unless otherwise accepted by *Public Works and Engineering Department Stafff*,:

The following information and details are to be included, but not limited to;

- Existing sanitary sewers and services to the limits of the catchment area
- Proposed and existing sanitary sewers, forcemains, maintenance holes and appurtenances, indicating grade, pipe size, length of each section of pipe and direction of flow, material;
- Drainage areas within the project limits draining into the proposed system,
- Catchment area in hectares, direction of flow and section population or population density.

2.2.7 Composite Utility Plan

In order to ensure that conflicts are avoided among utilities, street trees, municipal services, driveways etc. the *Consultant* will compile the Composite Utility Plan for utilities other than water and sewer from the requirements of the various public and private utility agencies. The Utility Plan shall also detail the layout for street lighting. The Utility Plan shall be submitted prior to the *Acceptance* and sign off of the civil engineering design drawings. The Composite Utility Plan is to be accepted / approved by all individual utility agencies present on the drawing and Canada Post, prior to final *Acceptance* by Public Works and Engineering Department *Staff*.

The following information and details are to be included, but not limited to;

- A legend using standard symbols.
- The location and name of all existing and proposed utilities (Hydro, Telephone, Cable TV, Gas, Streetlight), including those in common trenches.
- The location of all existing and proposed utility structures and pedestals, including Canada Post community mailboxes.
- Typical utility trench details and duct locations shall be shown.
- Any specific duct and trenches cross section details for road crossing shall be shown.
- Any other utility details or notes shall be shown on the Composite Utility Plan.
- Existing and proposed fences, retaining walls, structures.
- Surface features for watermain, sewer structures, low impact *Development*, street trees, etc.
- Proposed and existing driveway locations c/w minimum setbacks from utilities and structures.

The Composite Utility Plan shall be prepared at a scale of 1:500, unless otherwise approved. It is the *Consultant*'s responsibility to ensure there are no conflicts resulting from the design and location of the various utilities.

2.2.8 Landscape Plan

Refer to Section 5.10 for the Landscape Requirements.

2.2.9 Existing Conditions Plan

This plan will be used as a benchmark for all future *Development* Infrastructure, *Municipal Drain*, *Municipal Consent* and *Capital Project* conditions on the site and is required so *Public Works and Engineering Staff* may familiarize themselves with the present site conditions. In addition, this plan will be used to validate the pre-*Development* parameters used in the pre-*Development* storm water management modeling. The professional responsible for the preparation of this plan must seal the plan with their professional seal (i.e. Professional *Engineer*,). The requirement for this plan may not be substituted by information illustrated jointly or wholly on other required plans.

The following information is required to be shown on this plan but not limited to:

- Geodetic Benchmark
- Legend
- North Arrow
- Municipal Address
- Professional seal (signed & dated)
- Key Plan
- Legal Property Description
- Property lines and all applicable bearings and distances of each property line
- Street Names
- Site Area (in hectares)
- Contours to be drawn to 0.5m intervals minimum. Flat areas may require contours to be drawn at closer intervals in order to define drainage patterns. Contours to extend beyond the property line to a point which confirms the drainage on the neighbouring property will not be impeded by the proposed *Development*.
- Spot elevations are required at all lot corners and should be used to delineate depressions and ridges within the site.
- Show all existing site surface features such as but not limited to: buildings, sheds, walkways, driveways, trees, fences, major drainage channels, surface texture (i.e. concrete, gravel, asphalt)
- All existing above ground and underground services, within the road allowance, fronting the site:
    - Dimensions of road allowance/carriage ways/boulevards
    - Location of sidewalks/hydrants/trees/utility poles/signs/storm & sanitary sewers/infiltration galleries/water & gas mains/maintenance holes/catchbasins/curbs & gutters
    - Diameter/length/slope/inverts of all storm and sanitary sewers
    - Location and depth of all telecom and hydro ducts

  - Elevations along centreline, top/bottom of curbs, and property line
- Pre-*Development* drainage boundaries and corresponding areas
- Drainage patterns on neighbouring properties

Note: This plan may not be required if the proposed *Development* is located within a registered plan of subdivision with an accepted lot grading control plan.

If this plan is prepared by someone other than the *Engineer* responsible for the SWM design it is the *Engineer*'s responsibility to ensure the accuracy of the Existing Conditions Plan for which the SWM design is based upon.

Each Existing Conditions Plan shall bear a note making reference to all other plans included with the SWM Report. Reference should also be made to the storm water management report itself, the date of the report, and the *Lands*caping Plan (e.g. This plan to be read in conjunction with but not limited to the Existing Conditions Plan, Grading and Sediment and Erosion Control Plan, Storm Water Management Plan, *Lands*caping Plan, and the Storm Water Management Report dated XXX.)

2.2.10 Sediment and Erosion Control Plan

The Sediment and Erosion Control Plan must illustrate how the site will be graded to provide erosion protection during construction considering phasing of the *Development* where applicable, how the final grading will ensure positive drainage away from all buildings, how the rainfall runoff will be directed to an accepted legal outlet and ensure that the site grading is compatible with the neighbouring properties. All downspouts outletting to the surface must be directed to a landscaped area away from existing adjacent properties and are required to be equipped with splash pads to minimize the effect of erosion from rainwater.

The site grading is to be implemented in a fashion to allow SWM to be implemented using both the minor and major drainage systems.

The following information is required to be shown on this plan but not limited to:

- Geodetic Benchmark
- Legend
- North Arrow
- Municipal Address
- Professional *Engineer*'s seal (signed & dated)
- Key Plan
- Legal Property Description
- Property lines and all applicable bearings and distances of each property line
- Street Names
- Proposed grades
- Top of foundation and/or finished floor elevation and basement elevations (if applicable). 2 yr. seasonally high groundwater table elevations.

- Location of all proposed maintenance holes and catch basins
- Clear indication of where existing grades are to be matched
- Direction of flow with corresponding gradient
- Swales /ditches with corresponding gradient
- Top and bottom elevations of all curbing, retaining walls and embankments
- Embankments 6:1 or steeper to be shown using a series of alternating long and short lines with corresponding slope ratio. Maximum embankment is 3.5:1.
- *Easement*s both aerial and *Land*: Storm, sanitary, water, gas, hydro, telecom, environmentally significant areas, access, etc.
- Drainage patterns on neighbouring properties +/- 20m outside the subject property line. Existing drainage patterns must be considered and respected in the design of infill *Development*. Legal outlets will be required for infill / Site Plan *Development*.
- Trees to be retained/protected, or removed and the location of any proposed tree/root protection measures
- Location of all proposed stockpiles
- Table of revisions
- Location of all proposed and existing Silt Fencing
- Major overland flow routes
- Sedimentation ponds with cross sections, contributing drainage areas with storage volumes and outlet controls. Fences are required around water bodies with 91cm or more of standing water within a 24 hour period.
- Check dams
- Diversion swales
- Erosion protection for catch basins and maintenance holes
- All permanent structures (i.e. decorative features, light standards, deep well units, sheds)
- Construction details for swales, silt fencing, sedimentation ponds, check dams, diversion swales, erosion protection for catchbasins and maintenance holes, mud mats, etc.
- Professional *Engineer*s stamp and signature
- Show delineation between light duty and heavy duty asphalt on grading plan as per geotechnical report.
- Rip rap sizing calculations as per MTO requirements are required to verify that stone size and slope of its placement are acceptable as per OPSD 810.010 (Type B).

2.2.11 Site Servicing Plan

A Site Servicing Plan showing all internal site services for storm, low impact *Development*, storm water management, sanitary, water etc. is required for review and *Acceptance* by the Public Works and Engineering Department prior to final issuance of construction plans and / or execution of an *Agreement*. The Site Servicing Plan must also show the location of all service structures or cleanouts so *Public Works and Engineering Staff* may assess the impact a particular site may have on the municipal system. *Public Works and Engineering Staff* must be

satisfied that proper engineering practices have been applied to the design of all services within the site and within the R.O.W..

NOTE: All sanitary maintenance holes located within the storm water management ponding areas to be fitted with water tight covers, as per OPSD 401.050 and 401.030.

NOTE: It is the *Engineer*'s responsibility to ensure the accuracy of the existing plan shown on the drawings submitted to the *Public Works and Engineering Department* for review. The *Township* does not guarantee the accuracy of the information presented on any drawings that are obtained from the *Township*, for design purposes.

The following information is required to be shown on the Site Servicing Plan but not limited to:

- Geodetic Benchmark
- Legend
- North Arrow
- Municipal address
- Professional *Engineer*'s seal (signed & dated)
- Key plan
- Street Names
- All existing underground services to the site such as:
    - storm/sanitary laterals
    - water
- Distance from curb to property line
- Tie in dimensions for the position of new services to ensure connections are placed in the proper location
- Notation of all existing services to be removed or disconnected
- Proposed services from the street to the building including, but not limited to, the following:
    - size, material, length and slope of all sewers and laterals, top of grate elevations and sewer inverts of all maintenance holes and catch basins
- Pipes located within frost zones to be insulated. Detail to be provided on plan.
- Location and size of all silva cells or accepted equivalent.
- Details for all appurtenances related to servicing to include, but not limited to, the following:
    - all specialized *Engineer*ed structures, pipe bedding, insulation, flow control device, weirs, rip rap, etc.
- Specifications for all on-site low impact *Development*, stormwater management, storm / sanitary sewers and water services to the property line (i.e. pipes, grates, maintenance holes, catchbasins, seepage collars, etc.)
- Location and size of all *Easement*s (existing and proposed).
- Clear identification of *Works* to be completed, within the municipal right-of-way, by the *Contractor* (i.e. closing of redundant driveway entrances, curb & gutter replacement, curb cuts, sidewalks, boulevard restoration, etc.)

- Show / present existing drainage patterns adjacent to the *Municipal Drains*, Mutual Drain *Agreement*s, etc.
- Clearly identify downspout locations and ensure downspouts are directed to landscaped areas, splash pads or infiltration galleries. Adjacent property not to be affected by artificial collected water and discharge.
- Identify vertical and horizontal separation between services. Minimum vertical separation is 0.5m and minimum horizontal separation is 2.5m as per OBC / MECP procedure F-6-1.
- Show all fire hydrant locations. Fire hydrant separation between permanent structures must meet NFPA & DGSSMS.
- Infiltration galleries with two observation wells must be shown on the plan, including size and over flow and storm connections to and from the gallery. Infiltration galleries must be 5m away from a structure (structure defined under the Building Code). Private infiltration galleries to acquire an ECA as per the Ontario Clean Water Act.
- All MH's and CBMH's in the municipal or Regional right-of-way require benching as per DGSSMS.
- The max Modulock height is 300mm. The Region of Waterloo DGSSMS section C.3.4 states that Modulok to be as per OPSS 407 and OPSD 704.010. Additionally, ladder rungs to conform to the aforementioned OPSD 704.010.
- Safety grates are required in structures 5.0m deep or greater.
- As per Region of Waterloo DGSSMS section B.4.3.5, drop structures shall be provided in accordance with MECP design guidelines.
- The Region of Waterloo DGSSMS section B.4.2.12 states that 300mm or larger on open inlet/outlet requires rodent grate. Refer to OPSD 800.010. Other details/designs may be acceptable upon *Public Works and Engineering* staff review. Additionally, in the Region of Waterloo DGSSMS section B.4.13, it states that headwalls with 450mm and smaller outlet require headwall as per OPSD 804.030 and with 525 and larger outlet requires a headwall as per OPSD 804.040. The grating for a headwall is as per OPSD 804.050.
- If an oil/grit separator is required on the site add the note "STC or equivalent accepted by *Public Works and Engineering*".
- Through the Site Plan or Committee of Adjustment process if it is determined that a sanitary/storm sewer or a water main must be extended to service a particular property a MECP Environmental Compliance Approval will be required and all *Fees* associated to the extension must be paid prior to final Site Plan *Acceptance* from the the *Township*.
- Each new building that requires a sump pump must provide a storm sewer connection to the street. If a storm sewer is not located on the street, one must be extended if the storm sewer is located within 90 meters from the *Development*. The extension of the storm sewer is 100% the *Developer*s cost. A sump pump is required in every new building through the Building Code.
- New services are required to be connected to the property if the existing services are undersized, older than 50 years and / or of a material that is no longer acceptable within the *Township* (ex. clay). The existing services then must be capped at the sanitary sewer main.

- Each property shall be supplied with a maximum of one water service and one sanitary service.
- Connections to a sewer less than 200mm in diameter do not need a structure unless it is tapping into the same size pipe. The connection must be a “Y” connection at a 45-degree angle with directional flow above the spring line.

2.2.12 Standard Notes

The following notes are to be placed on all Site Servicing Plans, as a minimum:

- The property *Owner* is responsible for restoration of all damaged and/or disturbed property within the municipal right-of-way to *Township* or Regional standards.
- Each Site Servicing Plan shall bear a note making reference to all other plans included with the SWM Report. Reference should also be made to the storm water management report itself, the date of the report, and the *Lands*caping Plan (e.g. This plan to be read in conjunction with but not limited to the Existing Conditions Plan, Grading Plan, Sediment and Erosion Control Plan, Storm Water Management Plan, *Lands*caping Plan, and the Storm Water Management Report dated XXXX.)

2.2.13 General Notes Plan

This plan shall list the following and project specific notes determined by the *Engineer*

- General *Township* design criteria that apply to all sheets. The pertinent notes for the project can be extracted from the design criteria chapter (i.e. lot service, pipe sizes, curb type, catch basin grate type, etc.);
- Special warnings from utility companies and government agencies (i.e. existing structures and buried services), and
- General *Township* policies and by-laws which apply to the construction activity (i.e. hours of work, mud tracking, fire permits, construction access, etc.).
- The *Owner*’s consulting *Engineer* shall certify in writing that all site *Works*, grading and servicing has been constructed in accordance with the approved site servicing and grading plans.
- **All *Works* and services to be installed with a municipally owned right-of-way or *Works* and services to be assumed by the municipality shall require full time inspection from the *Owner*’s consulting *Engineer*.**
- All *Works* within the road allowance are to be constructed to meet the minimum standards as noted in the Region of Waterloo’s Design Guidelines and Supplemental Specifications for Municipal Services, latest revision.
- The applicant / *Contractor* is to notify the Public Works and Engineering Department to schedule an inspection, 2 days prior to undertaking the installation of the water services and sanitary and storm sewers and PDCs.

2.2.14 Traffic Management Plan

Traffic Plan(s) to be drawn to a scale of 1:1,000 and shall show (as a minimum) proposed *Land* uses (e.g. Residential, commercial, parks etc.), road layout, driveways, sidewalks, drop off areas, bicycle paths, bicycle lanes, multi-use trails, entrances to parks and open space areas, signage for bicycle circulation, pedestrian routing, storage and tapers for turn lanes, auto turn layout for emergency services and Region / Township service vehicles, traffic control signs including the specific locations of each regulatory, warning and information signs, pavement markings, on-street parking, restricted parking in school zones and any traffic calming measures (if proposed/required). Grand River Transit should be consulted for transit stops and routing as applicable.

2.2.15 Urban Forest Asset – Tree Planting Plan

Urban Forest Asset – Street Tree Planting Plans are to demonstrate and provide planting locations for trees within the public realm. This plan must clearly show (as a minimum) the soil volumes available to each tree, their species and locations. The Urban Forest Asset – Street Tree Planting Plan is to be a scale of 1:500.

Refer to Section 5.10 Landscape Requirements of this manual for all tree planting and soil habitat zone requirements.

2.2.16 Signal Wiring Plan and Signalized Intersection Plan

Should traffic/pedestrain signals be required, a separate Signal Wiring Plan; and Signalized Intersection Plan showing location of all but not limited to poles and mounted hardware, hand wells, ducts/cables, the controller, and full turn lanes (storage and taper). The plans shall be submitted at a scale of 1:500.

2.2.17 Staging Plan

If a phase within a Capital, *Development* Infrastructure, *Municipal Drain* or *Municipal Consent* project is to be constructed in stages, a Staging Plan showing current and future stages is to be prepared at a scale of 1:1,000, unless otherwise required by *Public Works and Engineering*. *Public Works and Engineering Staff* may request specific scales in order to create composite plans other ongoing projects, etc. Access the site and haul routes are to be shown and notes provided.

If this information can be clearly shown on the General Plan/Underground Services Plan, the two drawings can be combined.

The Staging Plan's function must be substantiated with an interim Stormwater Management Report (and other reports as required by the *Township*).

Provide a phasing and construction schedule that shows the *Works* required to mitigate sediment contamination of affected creeks, adjacent *Lands*, and storm sewer systems and how they are to be staged.

2.2.18 Construction Management Plan

The Construction Management Plan (CMP) provides an overview of the proposed site *Works* and actions undertaken to identify and minimise the negative effect to local residents and property *Owner*s during the *Works*. Examples of activities included in the CMP are management of;

- construction material,
- machinery and equipment,
- schedule of construction activities,
- excess fill,
- demolition,
- vegetation,
- air quality (dust),
- surface encroachment,
- aerial encroachment,
- site security,
- access point(s),
- temporary traffic,
- groundwater,
- health and safety.

2.2.19 Park/Multi-Use Pathway *Development* and Capital Plans and Grading Plans

Park/Multi-Use Pathway *Development* and Capital Plans are to demonstrate that the proposed park facility program, including buffers, can be satisfactorily achieved. Both Park/Multi-Use Pathway *Development* Plan and Park/Multi-Use Pathway Grading Plan are to be a scale of 1:500.

2.2.20 Street Lighting and Electrical Distribution Drawings

To a scale of 1:1,000 showing the following but not limited to:

- Roads, lots and their numbers;
- The position of all new light standards within the *Development*;
- The position of existing light standards surrounding the *Development* and their relation to the proposed work, and
- Photometric plan
- Existing and proposed transformer locations, primary electrical supply, secondary electrical supply and road crossings

- A detail of and tabulated specifications for the type of luminaries proposed.

All street lighting designs shall be carried out by Kitchener-Wilmot Hydro Inc., with the exception of ornamental lighting. All ornamental lighting designs shall be in accordance with the Kitchener-Wilmot Hydro requirements. All electrical, street and ornamental lighting design shall be done with awareness to the proposed street tree locations and the minimum tree planting and soil volume requirements identified in Section 5.10 Landscape Requirements. Temporary hydro pole locations shall be approved by the local hydro authority in conjunction with the *Consultant*. Street poles shall include future connections for the 5G network infrastructure / capabilities.

2.3 Inspection and Testing

2.3.1 Inspector and Inspection

All work to be done within the *Township* shall be done to the satisfaction of the Contract Administrator, the *Township* and / or of an Agent / *Inspector* authorized to act for the Contract Administrator / *Township*. The *Inspector* is required by the Contract Administrator / *Township* to ensure that the provisions of the Infrastructure Standards and Specifications Manual, Contract, etc. are faithfully adhered to, especially in regards to the quality of the workmanship and materials, and may stop the work entirely but not limited to if there is not a sufficient quantity of suitable and / or approved material on the site to carry on the work properly or for any good and sufficient reason. In particular, but without limiting the powers of the *Inspector*, orders given by the *Inspector* relating to the quality of material or workmanship or in respect of safety or public convenience shall at once be obeyed by the *Contractor*. The *Inspector* shall have the power to suspend any worker as outlined in OPS GC 3.01.17 and the *Contractor* shall ensure that any worker so suspended is forthwith removed from the site.

Materials and equipment and the process of preparation or manufacture of materials or equipment shall at all times be subject to inspection, testing and rejection at any stage by the Contract Administrator or the Contract Administrator's agent(s) and *Township Public Works and Engineering Staff*. The Contract Administrator will give the *Contractor* reasonable notice of the materials and equipment in respect of which the Contract Administrator proposes to have inspection or testing carried out during the process of preparation or manufacture, save that in the case of materials or equipment specifically stated in the Contract and or the Infrastructure Standards and Specifications manual as required to be tested or inspected by or in the presence of the Contract Administrator, the Contract Administrator shall not be obliged to give such notice.

The *Contractor* shall notify the Contract Administrator in writing at least seven (7) days previous to the commencement of preparation or manufacture of each item of such materials or equipment of the time and place at which such preparation or manufacture is to commence in order that the Contract Administrator may be present.

Notwithstanding compliance by the *Contractor* with the foregoing paragraph hereof, if any materials or equipment prepared or manufactured away from the site of the *Works* and required by the Contract or by the Contract Administrators to be inspected or tested by or in the presence of the Contract Administrator at the place of preparation or manufacture become ready for delivery to the site of the *Works* but have not been inspected or tested as required, the *Contractor* shall so notify the Contract Administrator / *Township Public Works and Engineering Staff* in writing and shall not have such materials or equipment delivered to the site of the *Works* until authorized to do so in writing by the Contract Administrator / *Township*.

In any event, materials or equipment required by the Contract / Infrastructure Standards and Specifications manual to be inspected or tested by or in the presence of the Contract Administrator / *Township* shall not be incorporated into the work until the required inspection or testing has been carried out to the satisfaction of the Contract Administrator / *Public Works and Engineering Staff*.

The *Contractor* shall provide, and shall ensure that all Sub*Contractor*s and those carrying out the process of preparation or manufacture shall provide, every reasonable facility and cooperation to assist the Contract Administrator, or *Inspector* or others designated by the Contract, *Township* or by the Contract Administrator in carrying out inspection and testing.

The *Contractor* shall not backfill or otherwise cover up any work without either having it inspected and passed by the *Inspector* or first notifying the *Inspector* in a manner approved or as directed by the Contract Administrator / *Township* that the work is ready to be covered up and allowing the *Inspector* reasonable notice and opportunity for carrying out an inspection. The *Consultant* shall have the proper resources on site to adhere to the constructor's schedule and ensure the *Works* are inspected. In relations to the contractors forces 1 inspector for every two crews on site this includes the sub contractors crews and generals. Any work covered up other than in accordance with the foregoing shall, if ordered by the *Inspector* or the Contract Administrator, be uncovered or opened up for the inspection and the *Contractor* shall, as directed by and to the satisfaction of the *Inspector*, *Township Public Works and Engineering* staff or the Contract Administrator, make good again all openings, excavations and disturbances of any property, real or personal, resulting therefrom, all at the *Contractor*'s expense.

No acceptance / approval by an *Inspector*, Public Works and Engineering representative or by the Contract Administrator or failure of an *Inspector*, *Township* or the Contract Administrator to carry out an inspection shall relieve the *Contractor*s of any obligations under the Contract or shall be interpreted as being an acceptance of defective or improper work or material which shall be in every case be removed and replaced properly or otherwise rectified in a satisfactory manner whenever discovered at any time.

If in addition to the inspection provided for above, the *Contractor* is required by the Contract, by law, by local by-law, legislations, *Township* Infrastructure Standards and Specification Manual / *Township* representative and /or by the Contract Administrator to have any part of the

Works inspected by others, the *Contractor* shall give the Contract Administrator and the others concerned reasonable notice of the time and date proposed for the additional inspection.

2.3.2 Testing

If there are failures, further testing will be done on the samples to determine the limits of the failures.

Corrective action will depend on nature and extent of failures.

Additional Testing may be required by *Township Staff*, and *Engineer* depending upon site conditions, design, construction methods, etc.

The Soils *Engineer* shall issue a certificate of compaction and approval of granular materials prior to the placement of Hot Mix Asphalt.

The following are the minimum tests required for roadway construction:

- Sieve Analysis shall be performed in order to assure that the granular base courses meet the current *Township* / OPSS MUNI / Region specifications. Representative samples are to be obtained by the *Consultant* prior to and during the road construction operation.
- Physical properties requirements as per OPSS (MUNI)
- "Density Tests" shall be performed in order to assure that the granular base courses have been properly compacted to the current *Township* Standard Specifications and OPSS (MUNI). Density Tests on the road subgrade shall be performed as directed by the geotechnical *Engineer*.
- A "Proof Roll" of the road subgrade shall be performed under the supervision of the geotechnical *Engineer* to assure unsuitable road subgrade material is removed. The Soils *Engineer* shall issue a certificate of compaction and approval prior to the placement of granular materials, stating that the trenches, services and road subgrade have been backfilled, compacted and tested and is suitable for the placement of granular materials
- "Asphalt Tests" shall be performed in order to assure that the binder and surface asphalt meets the above requirements and tolerances and as per OPSS (MUNI).
- "Concrete Tests" shall be performed on curbs, sidewalks and driveway ramps in order to assure that the concrete meets the above requirements and tolerances and as per OPSS (MUNI), CSA, etc.

2.4 As-Recorded Drawings

2.4.1 General

The As-Recorded drawings constitute the original engineering drawings which have been amended to incorporate the construction changes and variances in order to provide accurate

information on the *Works* as installed in the *Development and Capital projects*. The Registered Plan Number must be clearly shown on all As-Recorded General Plan of Services. For further detail reference DGSSMS and section 1.9.

2.4.2 As-Recorded Field Survey

The As-Recorded revision shall be based upon a final survey of all the subdivision services and firm construction records. The final survey of the subdivision services shall include a field check of the following items but not limited to:

- Location, top of grate and invert elevations of all sewer maintenance holes.
- Distances between all sewer maintenance holes.
- Location, top of grate and invert elevations of all catchbasins.
- Locations of all sidewalks and curbs.
- Location and ties to all valve boxes and valve chambers located in sodded areas.
- Location of all hydrants.
- Location and ties to all sample stations and other special watermain appurtenances.
- Road centerline elevations.
- Site benchmarks.
- Location of all service connections to all lots and blocks. Services are to be labelled with the centerline distance to the nearest downstream sanitary maintenance hole.
- Sewer and watermain pipe sizes and material.
- Location of all fencing constructed as part of the subdivision services.
- Location of all driveways, tree plantings, streetlight poles and transformers.
- Lot Servicing Records.
- All sewer and road grades are to be recalculated to two (2) decimal places.

2.4.3 Drawing Revisions

The original plans shall be revised to incorporate all changes and variances found during the field survey and to provide ties and additional information to readily locate all underground services.

One (1) mylar print, two (2) paper copies and a digital copy of the As-Recorded drawings in an AutoCAD Format acceptable to the *Township* Public Works and Engineering Department shall be submitted.

The following information below but not limited to shall be verified by the As-Recorded field survey and updated on the As-Recorded drawings:

- All sewer and road grades are to be recalculated to two (2) decimal places.
- All street line invert elevations for storm and sanitary service connections to each lot or block shall be noted on the drawing.
- All street names, lot numbering and block identification shall be checked against the Registered Plan and corrected if required.

- The *Contractor*, the date of commencement of construction and the date of completion shall be noted on the General Plan of Services.
- The “As-Recorded” revision note and date shall be placed on all drawings in the revision block.
- All civic address numbers shall be identified.

2.4.4 Tolerances

A maximum vertical plotting tolerance of 0.1 metres on the 1:50 vertical profile portion of the drawings and a maximum horizontal plotting tolerance of 1 metres on the 1:500 scale drawing shall be considered acceptable without replotting.

All sewer lengths are to be shown to the nearest 0.1 metres. The information shown on the As-Recorded drawings may be checked by *Township Public Works and Engineering Staff* at any time up to two years after final acceptance of the subdivision and if discrepancies are found between the information shown on the drawings and the field conditions, then the drawings will be returned to the *Consultant* for rechecking and further revisions.

The *Consultant* shall be required to explain; in writing, any major difference between the design and the As-Recorded data and to provide verification that alteration does not adversely affect the design of the subdivision services.

2.4.5 Submissions

Upon completion of all construction work and the As-Recorded revisions, the drawings shall be submitted to the *Township Public Works and Engineering Department* for their permanent records.

The submission of the As-Recorded drawings to the *Township Public Works and Engineering Department* must be completed before Provisional Acceptance of the above ground *Works* will be given (AutoCAD current within 3 years).

Section 3 – Engineering Requirements for Site Plan

3.1 Site Plan Submissions

This section of the Manual is meant to be an aid for Owners, Developers, Architects Engineers,or Planners when completing an Application for a Site Plan Agreement. Owners, Developers, Engineers, Architects or Planners should address each point and site specific requirements, where applicable, in order to accelerate the approval process.

The Owner shall retain the services of a single qualified agent to administer the site plan process and design requirements, and who will coordinate other consultants/contractors on his/her behalf. A pre-consultation meeting is to be held to discuss any unique situations that may exist on the site prior to the first submission.

In addition to the information below, all submissions must be submitted in both a hard copy and digital copy. Digital versions may be submitted as: two (1) USB, each with a full set of PDF drawings, or a link to a FTP server containing a complete set of drawings.

3.2 Drawing Requirements

All drawings shall be submitted with metric dimensions, be drawn in black and white, to a standard scale (1:50, 1:100, 1:200, 1:250, 1:500, etc.) and submitted on standard ARCH D (610mm x 914mm) sheets, bond paper.

In general, all drawings shall include the following information but not limited to;

- Title block and revision block
- Identification of the proposed use of the site (Development Name)
- Name and address of firm preparing the Site Plan
- Name of Owner
- Municipal address and Legal Description (Reference Plan, Lot, Concession and Registered Plan Lot Number)
- Metric scale
- Key Plan indicating general location of the development in respect to the Township street network
- Bench Mark data used (geodetic) described and labeled on the drawing
- Contour lines and/or spot elevations referenced to the Benchmark
- North arrow
- Legend

The Owner shall retain a qualified Professional Engineer to prepare all engineering drawings and to supervise the construction of all engineering services. The Consulting Engineer shall act as the Owner's representative in all matters pertaining to the design and construction of the services in the development. A declaration from the Owner is required at

the time of application showing that the Consulting Engineer has been retained to design and supervise the construction of the proposed development. Where a question arises over the requirements for professional design, the decision of the Township shall prevail.

The following engineering documents but not limited to, are to be prepared for each development application, as applicable:

Plans for the proposed development, comprised of;

- **Cover Page & Drawing Index** – Showing; the Development name, Key plan showing the development location relative to the nearby arterial roads, Owner and Consultant information, Drawing Index.

- **Site Plan** – The Site Plan drawing shall include, but not be limited to, the following information; a Site data table; Location, dimension and setbacks of all proposed buildings and structures; Location, dimensions and setbacks of all proposed yards, landscaped open spaces, planting strips, parking area, loading spaces, driveways, walkways, sight triangles and boundary fencing; Location of all proposed light standards & wall mounted lights, signs, refuse storage areas, snow storage areas and easements; Location of sanitary sewers, watermains, storm sewers, ditches, roadways, sidewalks, road widenings, existing plantings, etc; Location of all boulevard features (i.e. curbs, landscaping, trees, utilities, etc).

- **Site Servicing Plan** – The Site Servicing Plan shall include, but not be limited to, the following information; Location of all existing municipal infrastructure (i.e. watermain, sanitary sewer, storm sewer, catchbasins, streetlights, traffic controls, sidewalk, signs, fences, trees or landscaping, etc.); All future local improvement works agreed to in the Site Plan Control Agreement; Location of all proposed servicing (i.e. watermain, sanitary sewer, storm sewer, catchbasins, light standards, traffic controls, etc.); All details of any service connections to the Township infrastructure including methods and materials; All utility services.

- **Site Grading Plan** – Where applicable, lot grading is to be in accordance with the approved overall subdivision lot grading plan. The Site Grading Plan shall include, but not be limited to the following information; spot elevations at all locations where the grade changes on the site; retaining wall information; all swale and berm information; proposed elevations on all service lids and manhole covers; elevations at all building corners, underside of footing elevation & finished first floor elevation (F.F.E.), 100 year Regional storm ponding limit and access points (i.e. ramps, entrances, and loading bays); the existing elevations 30.0m beyond the site limits (where possible); elevations in driveways and parking lots to show drainage patterns.

- **Erosion and Sediment Control Plan** - Showing temporary erosion and sediment control measures to be implemented on the site, including but not limited to topsoil stockpile location and siltation control pond location, refer to Stormwater Management Facilities and erosion control sections for additional information required on the plan. Temporary construction access location and details to be provided on this plan.

- **Landscaping Plan** - Landscape Plan shall include, but not be limited to, the following information; Location and identification of all proposed plant materials (using symbols and letters); A planting list, showing the botanical and common name, size, height, spread, spacing, condition, quantity or other pertinent information; Identification of any planting beds and existing trees to be preserved or transplanted; All proposed site furniture such as benches, bollards, tree grates, light standards, picnic tables, bike racks, etc. noted on the plan and details provided. Refer to the landscape section for additional information.

- **Tree Inventory & Preservation Plan** – The Tree Inventory/Preservation Plan shall include, but not be limited to, the following information; A detailed inventory of all existing trees, significant shrubs or hedgerows, natural features, etc., with exact surveyed locations; Location of tree protection fencing around trees and vegetation to be preserved.

- **Architectural Elevations Plans** - The Architectural Elevation Plans shall include, but not be limited to, the following information; the massing and conceptual design of the proposed building; the relationship of the proposed building to adjacent buildings, streets, and exterior areas; the character, scale, appearance and design features of buildings, and their sustainable design; The elevations of all sides of all main and accessory buildings, showing all roof structures (penthouses, chimneys, roof top units, vents, air conditioning, etc.) with metric measurements.

- **Illumination Plan** – Illumination Plans are to show the location and design of all exterior lighting, including lighting specifications. All exterior lighting needs to be adequate for the site and directed inward and down into the site. Lighting should be designed to avoid causing ambient light pollution.

- **Detail Drawings & Notes**

3.3 Reports Requirement

Digital copies of reports, including but not limited to;

- **Stormwater Management Report** - A Professional Engineer shall prepare a report detailing the modeling, design and features of the proposed Stormwater

Management System. The Stormwater Report is to provide system performance data for the 2-year to 100-year design storms and Regional stormsand must include scale drawings showing delineated drainage catchment areas, delineated surface pond limits for the 100-year and Regional design storms (where applicable), overland flow route and a schematic diagram reflecting the model (complex models). Refer to the SWM section for more information.

- **Traffic Impact Study** - The purpose of the Traffic Impact Study (TIS) is to examine the impact of traffic generated by a new use at its access and at nearby intersections and interchanges, and determine necessary road improvements. The TIS will be used to support the developments internal parking lot layout and entrance locations. Impact assessment is to relate to current and future traffic volumes and the level of improvement required. The need for and content of a TIS shall be determined in consultation with the Township Public Works and Engineering Department. Refer to the Transportation impact study section for more information.

- **Acoustical Study** - All Industrial and commercial developments and any development adjacent to or within close proximity to residential dwellings or in any location determined to be sensitive by the Township, shall be required to conduct a noise impact analysis to demonstrate compliance to MOE guidelines and Region of Waterloo policy.

- **Detailed Cost Estimate** – A detailed cost estimate shall be provided for all internal and external works (separate).

- **Any other report that may be applicable to the development, such as**; Arborist Report, Servicing Design Brief, Archaeological Study, Flood Plain Analysis, Environmental Impact Study, Slope Stability Report, etc.

3.4 External Works

Installation of external works may be required within the municipal right-of-way as a result of a proposed development, the works may include items such as; the installation of municipal infrastructure (i.e. watermains, sanitary sewers, pump stations, storm sewers), traffic control devices (i.e. traffic signals), sidewalks and curbs, turning lanes, etc.

The Owner shall appoint a qualified Professional Engineer, acceptable to the Municipality, to design the external works.

The duties of the Developer's Consulting Engineer to include, but not be limited to the following:

- prepare the designs in accordance with the Engineering Standards of the Municipality, OPSS, Region of Waterloo and standard of care customarily observed by professional consulting firms;
- prepare and furnish all required drawings in accordance with the Engineering Standards of the Municipality OPSS, Region of Waterloo and standard of care customarily observed by professional consulting firms;
- obtain all necessary approvals from the Minister of the Environment, the local Conservation Authority, Region of Waterloo and any other government or regulatory agency, as required;
- provide the field layout of the external works including the utilities and certify the quality of the required testing of the external works;
- act as the Owner's representative in all matters pertaining to the construction;
- provide coordination and scheduling to comply with the timing provisions of the Site Plan Agreement and the requirements of the Municipality, for all external works specified in the Agreement.

Section 4 - Lot Grading Design

4.1 Introduction

These design requirements have been prepared to provide guidance in the preparation of Grading Plans that the Public Works and Engineering Department requires as a condition of acceptance / approval. This includes but is not limited to individual lot grading plans under control of a Subdivision *Agreement* and associated Subdivision Grading Plans, as well as lots or *Development*s with infill status, Severances and Site Plans.

These requirements have also been prepared to provide technical and procedural criteria to designers on the acceptable surface drainage, practices and techniques that are required by the Township of Wilmot. All *Development*-related grading design proposals are to be prepared in a manner that conforms and is consistent with the design criteria contained in this document, best engineering practices / princpiles, common law drainage legal rulings and standard of care customarily observed by professional consulting firms.

The design standards for lot grading ensures that surface water runoff is effectively managed in a manner that directs surface water away from a buildings foundation and towards a suitable location without negatively affecting adjacent properties as water damage is the leading cause of property claims and *Township* complaints. Grading must be designed to be in accordance with the criteria below but not limited to and constructed so that surface water flows away from buildings, over vegetated surfaces where possible, to an appropriate receiving area. This will promote infiltration, reduce the velocity of runoff and prevent nuisance flooding and erosion. Exterior foundation walls shall be extended not less than 150 mm (6”) above finished ground level as per OBC.

Documents beyond this Infrastructure Standards and Specifications that may be applicable for an engineering design include, but are not limited to, the as amended versions of:

- Township of Wilmot Bylaws
- Township of Wilmot Standard Drawings
- Township of Wilmot Trails Master Plan
- Ontario Building Code
- Accessibility for Ontarians with Disabilities Act
- CSA Z800-18 Guideline on Basement Flood Protection and Risk Reduction
- CSA W204:19 Flood Resilient Design of New Residential Communities
- Ontario Provincial Standard Drawings
- Applicable Legislation
- Municipal Drainage Act
- Common Law legal drainage rulings (Scarborough golf club vs City of Scarborough)
- Canadian water Resource Journal Common law and land drainage in Ontario J.Douglas Cameron
- Ontario Ministry of Agriculture, Food and Rural Affairs

- Zizzo allan Stormwater Management in Ontario: Legal issues in a Changing Climate

4.2 Design Criteria

The following table provides acceptable grading limits for all *Developments* requiring *Public Works and Engineering* review and acceptance:

Note: Although minimum and maximum limits are specified below, initial grading design shall avoid minimum and maximum grades.

Lot Grading Criteria		
Driveways (including ramps, aprons)	Minimum slope	2%
	Maximum slope	8%
Slope towards Side Property Line	Maximum grade	3 Horizontal to 1 Vertical (3H:1V)3:1
Useable Yard Space (6.0 metres from back of house or 80% of rear yard setback, whichever is less) Useable yard space measured from the rear property line to the closest wall at the rear of the house.	Minimum yard slope	2%
	Maximum yard slope	6%
Park and Block Grading	Minimum slope	2%
	Maximum slope	6%
	Topsoil depth	Refer to the landscape section

Regional overland stormwater flow routes	Flow depth on roads R.O.W. (to be contained within R.O. W.)	Max. 0.15m at centreline of road Refer to Stormwater Management Section for further guidance on depth and velocity of flooding and GRCA/MNRF requirements
	Flow depth on other overland flow routes. To be contained within municipally owned *Easement*s and/or blocks.	Max. 0.3m
Embankment	Maximum Slope	3H:1V
Swales	Minimum Longitudinal slope	2%
	Max. Longitudinal slope	6%
	Max. Side slopes	3H:1V
	Rear yard swale depth to catchbasin	Max Depth: 0.30m Min. Depth: 0.15m Max length: 50.0m (from top of swale to catchbasin)
	Side yard swale	Min. Depth: 0.15 m Max. Depth: 0.30m
Walkways / Trails	Minimum Gradient (Running Slope)	2%
	Maximum Gradient (Running Slope)	5%

	(hard surface required for 4% or greater gradients)	
	Maximum Cross Slope	5%
Parking Areas	Minimum Slope paved	1%
	Minimum slope not paved	2%
	Maximum Slope	5%
Barrier Free Parking	Maximum Slope	In accordance with AODA

General Design Criteria

Grading design shall provide for proper surface drainage and maximize usable *Land* area, in accordance with the Township of Wilmot Zoning Bylaw, applicable standards, specifications, and the following criteria:

- Overall grading must account for and accommodate external drainage tributary to the *Development*, Capital and Municipal Drain projects.
- Grading must direct storm runoff to major and/or minor system
- All overland major flow (above the minor system) route must be designed within the public road allowance to safely convey flows to a legal outlet. Any other overland flow routes (e.g. swale) must also be designed to safely convey flows to a legal outlet.
- Drainage shall be directed away from buildings (as defined by *Township* By-Law 2008-54 and the Ontario Building Code).
- Lot grading for each phase of the Subdivision is to be self contained within the subdivision limits even if it was not prior to *Development* and must be directed to a legal outlet contained within the applicable phase i.e. Subsequent phases of a subdivision *Development* shall not drain into a previous phase of a subdivision.
- Existing trees shall be preserved, where identified, as per the Tree Preservation Plan.
- For lots which require Stormwater Management designs to control increased storm water runoff, a Report shall be prepared, stamped, signed and dated by a Professional *Engineer*, licensed in the Province of Ontario.
- Where a new subdivision abuts an existing *Development* or undeveloped *Land*, the existing ground elevations at the common property line are to remain unchanged and existing drainage of abutting *Lands* is not to be disturbed, or obstructed, unless written permission is granted by the affected *Land Owner* and Municipality. All additional flows are to be taken into account in *Development* drainage calculations.

- Design is to take into account future *Land* use (i.e. fences, walkways along the side of the house, decks etc.), roof leader discharge points, percolation rate of the soil after construction etc.
- Additional reports and/or studies maybe required to address any other issues which may arise as a result of the proposed *Development* (i.e. soils reports to address slope stability issues, compaction concerns, or any other condition which may seem relevant).
- Where drainage patterns have changed as a result of the artificial collection of water, the *Township* may require that neighboring *LandOwner*s provide written permission for an *Easement* to be added or a mutual drain *Agreement* due to the revised drainage pattern.
- A 0.6m minimum undisturbed strip shall be maintained along all *Development* limits.

Driveways

- All driveways shall be designed as per OPSD 350.010 and 351.010 and relevant *Township* Specifications and Standard Drawings and shall be graded to drain towards the street and slope away from the dwelling units
  Residential driveways with reverse slopes are not permitted. Industrial/commercial loading docks may utilize an approach with reverse fall if drained by a catchbasin that is part of an overall integrated storm system.

Yards

- Front yards of residential lots shall be graded to drain towards the street. In preparing grading plans for house sitings, the *Engineer* shall establish maximum driveway grades which allow for a 50mm vertical construction tolerance.
- If the maximum yard or embankment slope is exceeded, a retaining wall will be required. Refer to the retaining wall sub section below for more information.
- To provide access to rear yards, where abutting side-by-side lots, a minimum 0.6m wide access strip shall be provided along at least one side of the building where side yard setback permits (usually along the garage side or side door entrance). This may not be possible for some lot layouts (e.g. walkouts) in which case a 3H:1V slope shall be used.
- Clear stone (20mm), rather than topsoil and sod, installed 0.1m thick with an approved filter fabric underneath, shall be provided where the combined side yards between two buildings is 1.8m or less. Native soil under the clear stone shall be scarified to a depth of 0.45m. Subgrade below the clear stone shall be graded and compacted in accordance with swale requirements. Where the combined side yards between two buildings is greater than 1.8m, clear stone may be provided subject to acceptance by the *Public Works and Engineering Department*.
- Rear yards which drain through abutting lower back-to-front type lots are permitted where:
  - Grades within the allowable limits outlined in this document can be obtained between the adjacent streets to achieve proper drainage of the lower lots
  - A maximum of 0.1 hectares may drain to a single rear or side yard swale.
  - Intercept swales are provided to direct runoff from the upper lots into the lower lot side yards swales and are to be located entirely on the upper lot.

Elevations

- A minimum of 0.15m shall be provided between the highest lot grade adjacent to the house and the top of the foundation wall as per CSA Z800-18.
- Basement openings to be minimum 0.3m above the centerline of road unless otherwise accepted by the *Public Works and Engineering Department.*
- Ground elevations at houses abutting Right-of-way over*land* flow routes are to be 0.225m above the maximum allowable over*land* flow route elevations and basement openings to be minimum 0.3m above.
- Basement openings at houses abutting rear yard swales are to be 0.3m above the centerline of swale.

Swales

- Drainage flows which are carried around houses for surface and roof water drainage are to be confined in defined swales, located as far from the house as possible.
- In situations where connections are required in the road R.O.W., additional permits are required.
- No surface ponding around catchbasins is allowed during a five year design storm event.
- Above a 5 year design storm and under a 100 year design storm event, 300mm surface ponding is allowed at catchbasins on roads, and 300mm surface ponding is allowed at rear yard catchbasins but must have no detrimental impact on private property.
- Rear yard swales are to be located on the common property line. In situations where a new *Development* is abutting an existing *Development*, the swale must be located on the side of the new *Development*.
- All side yard swales, except for infill lots, and collects drainage from more than one lot, shall be located on the common property line.
- Driveways are not permitted as outlets for drainage swales.
- All swales shall have legal outlets.

Lot / Block Grading

The grading design for lots/blocks on the Subdivision Grading Plans shall be as follows but not limited to:

- Addition of Topsoil / Hydro seed / Erosion control is required after 30 days of no activity
- Lot/Block drainage shall be self-contained, with over*land* flow directed to adjacent roads or other legal outlet as accepted by the *Public Works and Engineering Department.*
- Foundation drainage systems shall not be designed to drain large quantities of water away from foundation footings. Emphasis should be placed on keeping water away from the foundation draining system as the primary method. Footing drainage shall be recognized as the weakest link in the system in the overall drainage plan. Hydrogeology study and stormwater management design are equired for development applications.

Park Grading

The grading design for park blocks on the Subdivision Grading Plans shall be as follows but not limited to:

- Park drainage shall be self-contained, with over*Land* flow directed to adjacent roads or other legal outlets as accepted by the *Township.*
- Where parks abut residential or commercial lots, intercept swale(s) shall be constructed to intercept all surface flow and convey such flow to a legal outlet accepted by the *Township*. Additionally, a 3.5m wide *Easement* may be required if the swale is located on private property.

Retaining Walls

The use of retaining walls shall be limited. When required, the following will apply:

- All retaining wall systems greater than 1.0m are to be designed, stamped and signed by a qualified structural *Engineer* and subject to acceptance by the Chief Building Official or *Peer Review* at the *Developer*s expense.
- The retaining wall must comply with the (OBC).
- All retaining walls falling under the OBC definition of “buildings” will require a building permit.
- All retaining walls are to be dry-stone (interlocking, stacking type) or reinforced concrete.
- All retaining walls shall be constructed entirely on the higher property, with a minimum setback of 0.15m from the property line. A private *Easement* shall be established between the property *Owner*s on the lower property to provide access to the wall for maintenance purposes.
- Retaining walls on private property must be noted in the purchase of sale documents.
- Letter of Credit is required for retaining walls.
- If tiebacks are required, a minimum setback of 1.0m shall be maintained from the tiebacks to the foundation of any structure and/or underground service
- Certification by the *Developer*’s *Engineer* and/or Geotechnical *Engineer* stating that the retaining wall is designed and constructed to meet the most recent design standards including but not limited to granular backfill, structural integrity, materials, tie backs, line and grade is required.
- Weepers behind retaining walls are required and shall drain to an acceptable outlet that doesn’t affect icing on public or private walkways/driveways.
- A drainage swale shall be constructed along top and bottom of retaining wall to divert flows to an acceptable outlet
- No retaining wall shall resist or support public property.
- All retaining walls shall have barriers installed in accordance with the OBC.
- Retaining walls may require additional post certification testing.

4.3 Individual Lot Grading Plans and Certification

A Lot & Grading Plan shall be prepared for each individual housing unit, or group of units, in order to confirm conformance with the general grading concept as shown on the Subdivision/Site Plan/Infill Lot Grading Plan. Each Lot & Grading Plan shall be certified by the *Subdivider*'s/*Developer*s' Consulting *Engineer* for conformance with the accepted Grading Plan. Lot & Grading Plan certification is to be accepted and reviewed by the *Public Works and Engineering Staff* before a building permit is released. All elevations shall be relative to the benchmarks provided on the accepted Grading Plans.

Information to be shown on Individual Lot and Grading Plans

Prior to any technical review by *Public Works and Engineering Staff*, each lot and grading plan shall include, but not limited to, the following information:

- Drawing to be completed in Metric (SI Units)
- Title Page which includes
    - Municipal address and street name and lot number
    - Legal description of the property
    - Name of *Owner*/Applicant
    - Name and address of firm preparing the drawing
    - Scale
    - Table of revisions
    - Builder
    - Topsoil thickness to be placed on lot
    - Pervious/Impervious area percentages
    - *Easement*s
    - Rear Yard Catch Basins
- Drawing to be prepared and printed at a scale of 1:200 minimum on appropriate paper size (8.5"x14")
- Key plan showing the site location in respect to the *Township*/*Development* road network
- North Arrow
- Legend for existing and proposed information as required
- Drawings must be clearly identified as being "proposed" or "final" plans
- Location and elevation of the controlling benchmark (geodetic datum is required)
- Clear identification of property lines and Right-Of-Way (R.O.W.) limits, including any proposed widening(s)
- Location of any regulatory flood lines or *Development* limit lines (i.e. setback and slope stability limits)
- Any *Easement*(s) within the property and of whom the *Easement*(s) are in favour (including registration number and pin number)
- Current native soil elevations

- Location and elevation of all existing surface features located within the R.O.W. including but not limited to: abutting roads, edges of pavement and shoulders, curbs, traffic is*Lands*, sidewalks, walkways/pathways, utility poles and pedestals, transformers, streetlight poles, hydrants, bus shelters, mail boxes, watercourses, ditches, culverts, catch basins, embankments, and overhead utilities. Existing surface features within the R.O.W. to be clearly identified whether they will be maintained during *Development* or will require modification, removal and replacement, etc.
- Identification of any existing swales, ditches, culverts (including size and material), sewer and water creeks, watercourses, ravines, and drainage routes complete with elevation, inverts, and arrows indicating the surface drainage direction
- Location and details of infiltration galleries/trenches (if any)
- All existing access/driveway entrances to the subject property and the adjacent properties including widths and slopes as well as their building locations
- Location and elevation of all existing features within the subject property (buildings, structures, foundations, septic tanks, tile beds, wells, holding tanks for fire-fighting, fences, trees, bushes, etc.) Existing features within the subject property shall be clearly identified whether they will remain or be removed upon completion of *Development*
- Identification of any existing services (e.g. water, sanitary, storm, etc.) within the subject property including size and material along with location from property boundary
- Existing spot elevations within the subject property at a minimum 5.0m interval
- Existing spot elevations at a minimum of 10 – 20m (depending on size of lot/*Development*/adjacent terrain) beyond the subject property limit
- Location of proposed building(s) and structures, including but not limited to fences, porches, stairs, retaining walls, culverts, decks, and pools
- Top of Floor / Finished Floor level
- Top of wall elevation for each proposed foundation wall
- Proposed ground elevation at each proposed foundation wall
- Proposed finished first floor elevation
- Proposed sill elevations at side entrances where elevation differs from the proposed finished first floor
- The number of risers at each entrance to the dwelling
- Proposed garage floor elevation
- Proposed elevation of driveway at garage entrance
- Proposed elevation of driveway at property line
- Proposed grade of driveway and driveway ramp
- Proposed basement elevation (if applicable)
- Proposed underside of footing elevation
- *Engineer*ed fill and extended footing information (if applicable)
- RYCB lead protection – maximum underside of footing
- Existing and proposed elevation of ground at all lot corners
- Location of proposed roof downspouts and direction of flow
- Elevations at proposed swale inverts and intermediate points of grade change at reasonable intervals along the boundaries of the lot to illustrate the drainage of the lot in relation to the surrounding lands and buildings.

- Direction of surface water runoff shall be shown by an arrow; double stem arrows shall be used at swale locations.
- Grate and invert elevations of all catch basins
- Ponding and Hydraulic Grade Line elevation shall be shown on rear yard catchbasins to confirm the required limits are met.
- A detailed cross section schematic of all retaining walls. The cross section must contain, as a minimum, the following information:
    - Wall width/height
    - Hand rail
    - Property line
    - Drainage outlet
    - Material
- A detailed design drawing showing the design and location of all retaining walls. The detail must contain, as a minimum, the following information:
    - Proposed product/material the walls will be constructed of
    - The minimum and maximum proposed height(s) of the walls
    - The maximum width of capping proposed on top of the wall and maximum proposed base of wall
    - Drainage/Backfill/Compaction Requirements
    - Tiebacks, footing
    - Cross-section detailing the proposed wall
    - Fastening details of the fence to the wall (if applicable)
    - A note that the final design must be stamped by a Professional *Engineer*
    - The Landscape Plan must show to scale the accurate widths of any proposed retaining walls
    - Top and bottom wall elevations
- Drawings to be stamped, signed, and dated by a Professional *Engineer*

Based on the proposed *Works*, a Site Servicing Plan and subsequent Right-of-Way Permit may be required.

The following notes are to be included on the Grading Plans but not limited to:

- Existing drainage of abutting *Lands* is not to be disturbed.
- Basement openings to be minimum 0.3m above the centreline of road.
- Ground elevations at houses abutting over*land* flow routes are to be 0.225m above over*land* flow route elevations.
- Retaining walls, 1.0m high or greater, are to be designed by and constructed to the specifications of a registered professional *Engineer* in accordance with the Ontario Building Code.

Certification

Each individual lot will require the following but not limited to:

- Three (3) copies of the Final Lot & Grading Plan, certified by the *Subdivider*'s Consulting *Engineer*, shall be submitted to the *Public Works and Engineering Department* subject to review and acceptance prior to lot release.
- The lot grading shall be inspected by the *Consultant*/*Township* prior to topsoil grading.
- Final Lot & Grading Certification shall be completed by the *Consultant*, and the certificates shall be provided to the *Public Works and Engineering Department.*

At the build-out of the *Development*, the *Consultant* for the subdivision design shall certify that the Subdivision Grading Plan has been constructed according to the Professional Engineering Design for the Site Grading Plan. A complete topographic survey of all individual lots is to be completed of all final conditions and combined into one AUTOCAD Drawing and submitted to the *Public Works and Engineering Department.*

4.4 Infill Residential Design/Construction Requirements

Lot and Grading design for infill residential *Development*s shall conform to Section 4.2 and the following additional requirements:

- Post *Development* lot drainage discharge shall at least maintain or reduce pre-*Development* lot drainage discharge. To achieve this standard, the implementation of on-site storm water control (soak-away pits, infiltration trench or chamber, green roof, ponding, cistern, permeable pavement, etc.) may be required.
- Overall *Development* and grading shall be performed so as to preserve existing trees, where possible.
- A 0.6m minimum undisturbed strip shall be maintained along all sides and rear property boundaries.
- Siltation control measures (e.g. silt fence, erosion control blanket, straw bale flow check dams) shall be used during and after construction to prevent the migration of silt. Siltation control measures shall be placed at the limit of construction (i.e. at the 0.6m undisturbed strip) and within the Right-of-Way to mitigate silt movement in storm sewer and water courses.
- Grades shall be compatible with adjacent road grades, abutting properties and any proposed local improvements.
- The capacity and alignment of boundary swales shall not adversely affect adjacent properties.
- The builder/*Developer* must perform all necessary *Works* to ensure that no surface drainage problems are created on or adjacent to private or public *Lands* as a result of their *Development.*
- If servicing and/or storm water management facilities are required, design shall be completed by a professional *Engineer.*
- Location of sump pump discharge clearly identified.
- Existing residential homes which were constructed with no perimeter sub drains and are now placing an addition to the existing home require perimeter drains around the new

footings and a sump pit for storm water discharge. Discharge of storm water at grade must not affect adjacent properties.
- Roof leaders to discharge to surface and directed towards the road unless infiltration galleries have been installed. Roof leaders are to have an overflow discharge when connected to infiltration galleries/trenches.
- Identify all existing street furniture i.e. streetlights, utility poles/pedestals, etc.

Based on the proposed *Works*, a Site Servicing Plan and subsequent Right of Way Permit shall be required.

Additions to Existing Residential *Development*s

In an effort to minimize drainage impacts caused by the addition of pools, backyard *Lands*caping, retaining walls etc. The *Township* requires a permit for any proposed additions to existing *Development*s. The *Subdivider* / *Developer* shall submit to the *Township* for review details of any proposed additions. Details include but are not limited to:

- Setbacks of proposed additions from lot lines
- Current lot grading plan showing current drainage lines
- Area and type of hard surface proposed
- Location of accessory buildings

If initial review is determined by the *Township* that the application is non-intrusive, no further information from the applicant is required. However, should there be any concerns, the *Township* may require the following additional requirements as a minimum:

- Separate Hard Surface Control Plan, stamped and signed by a Professional *Engineer* registered in the Province of Ontario. This includes, but is not limited to, the following details:
    - Total lot area
    - House footprint area
    - Driveway area
    - Shed area
    - Pool deck area
    - Patio area
    - Walkway area
    - Other hard surface area
    - Impervious Area Calculation as a percentage of total lot area

Information to be shown on Infill Lot and Grading Plans

Lot and Grading Plans for infill residential *Development*s shall comply with Section 3.2. Additional information to be shown on the drawing shall include but not limited to the following:

- Location of tree protection fencing

- Location of siltation control measures
- The plan must include a note as follows:

  Finished Site Grading OBC – Articles 9.14.6.1 & 9.15.4.6

  The building shall be located and the building site graded so that water will not accumulate at or near the building and will not adversely affect adjacent properties.

  Exterior foundation walls shall be extended not less than 150mm (6") above finished ground level.

4.5 Lot Grading Acceptance and Certification Process

Proposed Lot and Grading Plan

- Prior to application for a building permit, an individual Lot and Grading plan shall be prepared and sealed by the *Subdivider*'s Consulting *Engineer*, for the lot on which the proposed building is to be built on.
- *Fees* as outlined in the Township of Wilmot Fees and Charges By-Law is required prior to processing the Proposed Lot and Grading Plan. A deposit will also be required. The deposit will be refunded upon successful completion / acceptance of the work, minus any inspection *Fees* as per the Fees and Charges By-law.
- The Proposed Lot and Grading Plan shall be reviewed and accepted by *Public Works and Engineering Staff* prior to a building permit being issued.
- If an adequate/acceptable outlet cannot be provided due to topographical or other physical constraints, the designer is to consider and implement other practices to retain the water on site (i.e. infiltration gallery, bio swales, water harvesting, etc.) and ensure that surface runoff does not adversely impact neighbouring properties.
- The proposed lot and building grading must be generally compatible to the existing and surrounding *Development* or adjacent properties.

Final Lot and Grading Plan

The *Consultant* will be responsible to certify that the "As-Constructed" lot and grading, and the location and elevation of any rear lot catch basins or other drainage appurtenances, if installed, are in conformance with the general overall lot grading plan and individual lot grading plan submitted at time of building permit. Certification of the final lot grades will only take place once the building has been fully constructed and the property is fine graded, top-soiled and sodded and any deficiencies have been corrected. The refundable deposit will be returned to the applicant, minus any inspection *Fees*, once the certification letter and as-constructed lot grading plan have been accepted by the *Public Works and Engineering Department.*

The certification letter shall include the following statement and layout as per appendix.

Final lot grading certificates are required to be completed prior to any application for additions to the property as referenced in this section

Lot Grading Flow Chart

Subdivider's Design
- Subdivider Consultant designs / seals overall subdivision grading plan.
- Legal outlets to be provided (Existing easements, mutual drainage agreement, Drainage Act, lot / block agreements, subdivider / subdivision agreements).

Township Review
- Public Works and Engineering Department review and acceptance of overall subdivision grading plan.

Builder lot design
- Builder / Developers OLS designs siting plan (individual lot grading plan).

Builder Submission
- Builder / Developer submits OLS design to Subdivider's Eng. Consultant for review and conformance with the Final stamp/sealed and Township accepted overall grading plan / subdivision drawings, reports, subdivision agreement package.

Township Review
- Subdivider consultant submits to Township Public Works / Engineering for review and acceptance.

Security / Permit Process
- Once reviewed/accepted lot grading security and review fee to be collected from the builder for each lot. Before building permit is issued.

Builder Verification
- Once foundation is installed, OLS to confirm T/F elevation and overall foundation layout. Submit to Township Development Services for review / acceptance

Builder Verification
- Once home is built and subgrade is constructed (i.e. before topsoil), OLS or subdividers consultant to survey / inspect subgrade and confirm topsoil depth to be placed on lots. inspetion report / survey to be provided to Public Works and Engineering.

Builder Submission
- OLS / Subdivider's Consultant / Builder to submit plan / inspetion report to the Township Public Works and Engineering for Review / Acceptance / filing.

Builder Submission
- Once topsoil and sod is placed, Builders OLS to survey final grade to ensure compliance with overall grading plan and accepted siting plan and submit dwg and certification letter to subdividers consultant for review / signoff and site visit to ensure compliance with subdivision plans.

Process Submission
- Subdivider consultant submits OLS certification letter and drawings as well as Cosultants certification letter to Township Development Services and Public Works and Engineering Departments for review / acceptance / filing

Builder Release
- Builder security deposit to be released

Section 5 - Roadways

5.1 Roadway Design

Road Classification

The geometric design of Township roads shall, as a minimum, conform to standards set out in the latest edition of the “Geometric Design Guide for Canadian Roads and Streets” issued by the Transportation Association of Canada (TAC), and the Ontario Provincial Standards (OPS). Generally, the *Township* will recognize a hierarchy of roads as Provincial Highways, Regional Roads and *Township* Roads.

Township Roads are roads serving the joint functions of facilitating traffic movement throughout the *Township*, providing direct access to abutting *Land* uses, and connecting to the Provincial and Regional road system.

All roadways shall be classified according to the traffic volume expected and the intended use of the roadway. Generally, roads are classified as Arterial, Collector and Local.

Arterial Roads means Class 1 and Class 2 highways as determined under the Table to Section 1 of Ontario Regulation 239/02 (minimum Maintenance Standards for Municipal Highways) made under the Municipal Act, 2001. Arterial Roads are intended to distribute large volumes of traffic between other Arterial Roads and Major Collector Roads. The primary purpose of Arterial Roads is to carry through traffic within and between municipalities.

Collector Roads means Class 3 and Class 4 highways as determined under the Table to Section 1 of Ontario Regulation 239/02. Collector Roads provide for both traffic service and *Land* access. The primary traffic service function is to carry traffic between Local Streets, other Collector Roads and the Arterial Road system.

Local Roads means Class 5 and Class 6 highways as determined under the Table to Section 1 of Ontario Regulation 239/02. Local Roads generally serve only the abutting properties and are not intended to carry through traffic.

Roadway Classification Design Criteria

The proposed classification of all streets within the project limits, minimum maintenance standards and traffic volume as per the TAC manual, as well as the following, shall be confirmed with *Public Works and Engineering Staff* prior to commencement of the design. Refer to chapter 2 of the TAC manual for road / street classification within the urban and rural boundary limits.

All other requirements including the following but not limited to shall be designed in accordance with the latest revision of the Transportation Association of Canada’s (TAC) Geometric Design Guide for Canadian Roads Part 1 and 2.

- Minimum Stopping Sight Distance
- Minimum Sag Curve K Value
- Minimum Crest Curve K Value
- Minimum Curve Radius
- Minimum Lane Width
- Minimum Width of Pavement
- Pavement Crossfall
- Minimum Grade: The *Township* acceptable minimum grade is 0.7% along centreline of road.
- Maximum Grade
- Intersection Angles
- Minimum Tangent Length between Intersections
- Minimum Tangent Length between Reverse Curves
- A minimum centreline radius of 20 metres is required for local urban situations at 90 degree bends.

Road Pavement Design

The following are minimum design requirements. The *Subdivider* / Design *Engineer* is required to engage a Geotechnical *Consultant* with experience in pavement design to confirm the minimum design based on results of the Geotechnical Investigation. The composition and construction thickness of the road pavement shall, as a minimum, be designed based upon the following factors as outlined in the geotechnical soils report:

- Mechanical analysis of the subgrade soil
- Drainage
- Frost susceptibility, and
- The future volume and class of traffic expected to use the pavement.

Pavements shall be designed for a minimum ADT of 1000 vehicles and an anticipated life of 25 years.

Copies of all test results and proposed road designs and supporting calculations shall be submitted with the engineering drawings. Pavement design not meeting the minimum standards indicated in this section for the particular road classification, will not be acceptable.

Arterial

50mm HL3: Surface Virgin Course
100 mm HL4: Binder Course 20% RAP 2-lifts
200 mm Granular ‘A’: Base
600 mm Granular ‘B’: Base

On roads that are designated Arterial, a concrete edge strip of “kill strip” shall be constructed.

Collector

40 mm HL3: Surface Virgin Course
100 mm HL4*: Binder Course* 20% RAP, 2-lifts
200 mm Granular 'A': Base
600 mm Granular 'B': Base

Local

40mm HL3: Surface Virgin Course
100 mm HL4*: Binder Course* 20% RAP
200 mm Granular 'A': Base
600 mm Granular 'B': Base

5.2 Visibility Triangles within Right of Way

Corner Lot(s): A lot situated at the intersection of and abutting upon two streets, or upon two parts of the same street, the adjacent sides of which street or streets (or, in the case of a curved corner, the tangents at the street extremities of the side lot lines) contain an angle of not more than one hundred and thirty-five (135) degrees. In the case of a curved corner, the corner of the building lot shall be deemed to be the point of the street line nearest to the point of intersection of the said tangents.

Driveways and parking spaces shall not be located within a visibility triangle

The *Township* requires that a 3m x 3m triangle of *Land* be added to the road allowance at the intersections of two streets and measured from the intersection of the street lines. Refer to **Error! Reference source not found.** below for details.

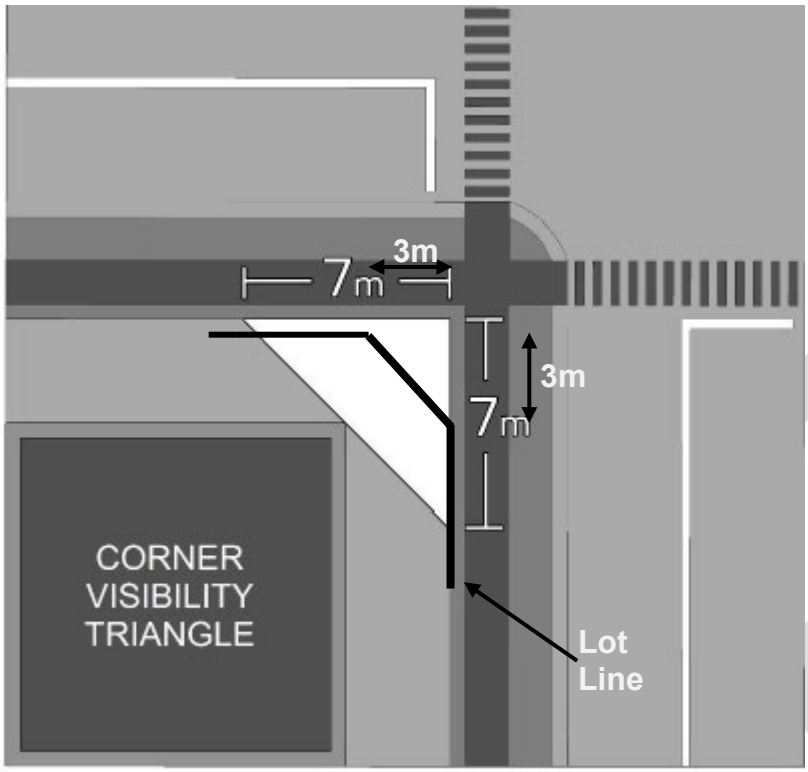

Figure 0-1 Visibility Triangles

5.3 Boulevards

Boulevards shall be graded and constructed according to Section 4 - Lot Grading Design of this document.

All construction debris and surplus granular materials will be removed to the required depth upon completion of the initial stage of road construction. The boulevards shall be maintained in a clean state until the roadway section is completed.

All boulevards shall be sodded to the right-of-way limit.

5.4 Sidewalks

- Concrete sidewalks within the *Township* are to be constructed as per TWSS 351

The location requirements for sidewalks in capital reconstruction and *Development* projects shall be as per *Township* Standard Drawings. This shall be confirmed with the Public Works and Engineering Department prior to commencing the detailed design. Sidewalks shall be installed on both sides of all streets (residential and industrial subdivisions). Exceptions to this requirement may be considered by the *Township*.

In cases where the sidewalk has been constructed prior to the establishment of an entrance, the existing sidewalk shall be removed and replaced with a thickened sidewalk section. Sidewalk depth shall be transitioned from a thickened section to a standard section at a slope of 10:1.

At street intersections the curb and the sidewalk shall be depressed to meet the roadway elevations as shown on the Region of Waterloo standards. Wheelchair ramps in accordance with OPSD/Region of Waterloo and AODA requirements to be provided. Tactile walking surface indicators shall be provided at all pedestrian crossings in accordance with Ontario Regulation 413/12 as amended under the Accessibility for Ontarians with Disabilities Act 2005.

Sidewalk construction immediately adjacent to a curb shall generally be avoided. If at anytime sidewalk is constructed adjacent to curb a 50mm key shall be provided along the back of the curb. 2.0m minimum wide sidewalk is required.

5.5 Driveways

Driveways constructed within the Township shall meet, but are not limited to, TAC, OPSD and Township requirements.

The *Subdivider* shall be required to provide for the excavation, concrete installation and maintenance in good condition, until Final Assumption, of each driveway from the travelled portion of the road to the lot line if there is no sidewalk. If there is sidewalk, the limit shall be from the travelled portion of the road to the sidewalk (ramp). All driveway ramps in new *Development* shall be constructed of concrete. Where there is no curb and gutter on the road, or where there is no sidewalk, asphalt or concrete pavement can be used for the ramp construction with confirmation by Public Works and Engnineering Staff required. Should a conflict occur between the location of a driveway and the location of a side inlet catchbasin (SICB), then the *Subdivider*/*Developer* shall correct the conflict by either relocating the driveway, except when a parking plan governs, replacing the SICB with a twin inlet catchbasin in the same location as the original SICB, all to the specifications of the *Township* and at no cost to the *Township*, or other options as discussed with *Public Works and Engineering Staff*.

Residential, commercial and industrial entrances to be as per *Township* drawings/requirements.

On a residential lot, a driveway or parking space is not to project beyond the side of the garage. Where no garage exists, the minimum setback from the edge of a driveway or parking space and a side or rear property line is 1.0m in urban areas.

Where driveways are construced between adjoining properties and where the barrier curb is less than 1 meter between driveways, the curb cut-out shall be continuous.

Where a driveway ramp is located on a stubbed street, a minimum of 8m between the ramp and dead-end-barricade is to be provided for snow maintenance, and this area must be

included within the phase of the project and within the registered Plan of Subdivision. The number of lots allowed to front onto a stub street shall not exceed one per side. Any temporary roads or turning circles must be contained within the subject registered Plan of Subdivision.

Driveway Standards

Driveway Width

- The minimum width of a driveway shall be 3.0 metres.
- Notwithstanding item 5.1 of this Section, the minimum width of a driveway where a detached private garage is provided in a rear yard shall be 2.4 metres.
- The maximum width of a driveway within the municipal right of way shall be:
    - Low density residential; Single - 3.5 metres, Double - 6.5 metres, Triple – 9.0 metres.
    - Multiple residential; 7.5 – 9.0 metres,
- Commercial, industrial and institutional; as per Ontario Provincial Standard Drawing TWSS, Region of Waterloo Specification and OPSD 350.010
- Rural entrances shall have a minimum platform width of 6.0 metres.

Driveway Setbacks

Diveway set back are to align with all relevant TAC manual guidelines and with the below requirements:

- Minimum distances for installation of driveway at an intersection is 9.0 metres from intersection property line.
- Provide minimum stacking room for two (2) cars between intersection stop bar and driveway entrance.
- No driveway shall meet the travelled portion of the road allowance at an angle of less than seventy degrees (70°).
- All Driveways shall extend sufficiently onto the adjacent property to allow parking on the adjacent property and not on Township Property.
- The minimum distance at the curb line between driveways on the same property frontage shall be:

    - A minimum of 15 metres for urban residential lots.
    - A minimum of 30 metres for rural residential and farm lots.
    - A minimum requirement in accordance with the Transportation Association of Canada (TAC-ATC) Guidelines for commercial/industrial/institutional lots.
    - Or any deviation or discrepancy with the standards set out in item 1, 2, and 3 herein, shall be at the sole discretion of the Director of Engineering and the decision shall be final.
    - A driveway crossing a frontage lot line on a corner lot or through a corner lot shall be located a minimum of 15.0 metres from the point of intersection of the front and flankage lot lines or where the lot lines do not intersect the point of

intersection of the projection of the front and flankage lot lines, measured along all points of the driveway.
  - Should the lot not be wide enough for the provisions in item 1 herein, the following calculation applies: Measured from the inside lot line, the required inside setback, plus the width of the driveway, plus 1 metre.

- Any entranceway to a commercial or industrial property shall conform to the Commercial Site Access Policy and Standards of the Ministry of Transportation.
- All driveways shall have unobstructed visual sightlines for entry onto any part of the Township property, including sidewalks.
- The Stopping Sight Distance criteria, as outlined in the TAC-ATC guidelines shall restrict the location of any driveway based on the road allowance geometrics, and may result in refusal of the Entrance Permit.

Circular Driveways

- The maximum cumulative width of the driveway entrances, measured at the point of crossing the property line (front or flankage) shall be 9.0 metres.
- The separation distance between two (2) driveway entrances on the same lot that cross the same lot line, measured at the property line, shall be a minimum of:
  - 9.0 metres if the driveway has access to an arterial road or to a collector road that is within 75.0 metres of an arterial road; or,
  - 15.0 metres if the driveway has access to a local road or a collector road that is greater than 75.0 metres from an arterial road.

- Driveway side slopes shall be graded to a maximum of 3:1 from the entrance platform to the ends of the culvert invert at the bottom of the ditch with 450mm of topsoil and sodded. Headwalls will not be accepted within the R.O.W.
- The municipal sidewalk and roadway curb shall be continuous through all entranceways, except in instances where the driveway operates as part of a signalized intersection.

New or modified driveways for commercial, industrial and institutional properties shall include two continuous 15 metre rebar the full width of the driveway and extend 1.0 metre beyond on either side. Where there is existing curb, it shall be removed and replaced, not cut.

- For driveway slopes within the municipal right of way refer to grading section
- Negative driveway slopes are not permitted within the municipal right of way and are discouraged on private property due to storm water and drainage issues. If the proponent proposes a reversed (negative sloped) driveway on private property, the applicant must prove, to the satisfaction of the Director of Public Works and Engineering, that the driveway will not be flooded by the overland flow during a 100-year storm event or by the surplus flow in the storm sewer system

5.6 Concrete Curb and Gutter

Barrier curb with standard gutter as shown on Ontario Provincial Standard Drawing OPSD 600.040 shall be used on all streets including cul-de-sacs islands except with reverse slope gutter. Approved *Contractor* machine cutting of curb or entrance depressions will be allowed. "Capping" of curb depressions will not be permitted. All depressions not used as property entrances shall be replaced with full barrier type curbing. Granular A is to be compacted 300mm past the back of curb. Concrete barrier curb with standard gutter shall have additional width where sidewalk is adjacent to curb or concrete driveway ramps, as per OPSD 600.040.

5.7 Road Sub Drains

Sub-drains will be required to run continuous along both sides of all roads, as per OPSD 216.021. Perforated HDPE sub-drain shall be 150mm in diameter, and below road base.

5.8 Cul-De-Sacs

All local roads which permanently terminate at one end (dead end streets) shall be provided with a turning circle (cul-de-sac) of sufficient area to enable the turning of garbage trucks, snow removal equipment and emergency vehicles. A road allowance with a 20.0 m radius will be required for a cul-de-sac with a pavement radius of 15.5 m. Permanent cul-de-sacs shall be constructed in accordance with the *Township* Standard Drawings.

Minimum gutter grades of 1% shall be maintained along the flow line of all gutters around the cul-de-sacs, the design road grade on the cul-de-sac and at the beginning of the bulb area where catchbasins are to be located. All cul-de-sacs, bulbs and intersections shall be detailed at a scale larger than the road plan. The details shall show gutter, crown and other grades sufficient to determine that the road will properly drain and shall be used as a basis for layout.

The maximum length of a cul-de-sac shall be in accordance with the NFPA

5.9 Roundabouts

Traffic Circles / Roundabouts are intended to calm traffic and direct traffic flows without necessarily requiring stop signs at intersections. The open spaces created in the traffic circles add to the character of neighbourhoods.

- Whenever Traffic Circles/Roundabouts are used they should be treated as significant landscape features in the public realm, as well as serve traffic calming devices.
- The design of the Traffic Circle/Roundabout shall be in accordance with the Canadian Roundabout Design Guide.
- The design of a Traffic Circle/Roundabouts shall ensure ease of snow removal, maintenance and emergency turning movements.

- The minimum radius for a Traffic Circle/Roundabouts should be in accordance with below **Error! Reference source not found.**.

Table 0-1

Intersection	Inscribed Circle Radius (i.e. outside circle dimension)	Radius of Inside Circle (at Mountable Apron)	Turning Road Width
Local-Local	12	6	6
Collector-Local or Collector-Collector	15	8	7
Collector-Single Lane	20	12	8
Arterial	27.5	18.4	9.1

5.10 Landscape Requirements

Introduction

All landscape plans for Municipally owned right-of-way and SWMFs must be approved by a member of the Ontario Association of Landscape Architects (OALA).

All concept tree-planting plans for a subdivision:

1. Must be approved (stamped) by a qualified Ontario Registered Professional Forester or a member of the Ontario Association of Landscape Architects (R.P.F. or L.A.). Each submission will be stamped, signed and dated including once reviewed and/or accepted by Public Works and Engineering.
2. Are to be shown on a standard plan in the subdivision drawing set, which shows lot dimensions (particularly frontages), and proposed driveway locations as prepared by the Consultant.
3. The drawing is to provide clear details and shows the species of tree on each lot, boulevard, SWMF etc.
   - The working detail identifying the actual planting locations and all surface features (hydrants, lights, etc.) must be reviewed between the Township Public Works and Engineering staff, consultant inspector, landscape contractor and Subdivider's/Developer's Landscape Architect before tree installation occurs.
   - The actual tree locations must be adjusted, or added as the built environment dictates according to the specifications in these guidelines.

- The drawings must include tree-planting details, tree location with sidewalk or without sidewalk, and general notes with the soil type indicated and a legend indicating tree species on each lot, boulevard, SWMF etc.

4. After installation of the trees a final “as constructed” plan shall be provided in hard copy, geo-referenced ESRI shapefile and AutoCAD which shall include the database details on the plantings.

Street Tree Planting Design Submissions

Street planting design submissions must include, at a minimum, the following:

1. Show north arrow generally pointing to the top of the page
2. Check for proper orientation and legibility of information
3. Proper street names
4. Key map
5. Title Block
   - Drawing number
   - Drawing title
   - Place for Township review stamp
   - Date
   - Revisions
   - Place for the Consultant’s approval/professional liability stamp
   - Signature over stamp
   - Scale
6. Show all services (Bell, Cable, Gas, hydro, Sewer, Water, Easements, etc)
7. Show all servicing poles, boxes etc.
8. Show all Traffic control at intersections (stop signs, lights, yield etc.)
9. Show distance to from driveways, hydrants, lights, etc.
10. The drawing must include the following:
    a. Tree-planting detail
    b. Tree location with sidewalk or without sidewalk
    c. Type of tree proposed
    d. Planting list including code, common name, botanical name, size, shape quantity, typical dimensions at maturity
    e. General notes with the soil type and size of tree indicated and a legend indicating tree species on each lot, boulevard, SWMF etc.

Tree Protection Plans

A Tree Protection Plan is required for infill, site plan, subdivision applications at the determination of the Township. Such plans shall include but are not limited to the following:

- Accurate plotting and identification of all trees on the plan;

- Crown spread, measured in metres on a drawing indicating the appropriate scale, showing extent of tree foliage covering the lot;
- Reviewed and Accepted Grading plan. This requires collaboration of the applicant's engineering and arboricultural consultants;
- Reviewed and accepted servicing plan indicating water, sewer/storm, hydro, gas, bell, cable and any other impacted utility. This requires collaboration of the applicant's engineering and arboricultural consultants;
- Tree protection zone (TPZ) limits;
- In accordance with the Tree Protection Barrier requirements;
- Appropriate signatures in accordance with the Tree Protection Plan; and
- The name and contact information for the arborist responsible for monitoring the implementation of the plan.
- The Township may request additional information in the tree protection plan at the discretion of the Director of Public Works and Engineering.

Street Trees

The Township will promulgate and enforce removal, planting, pruning and protection of trees upon the right-of-way of any street, alley or other public space in the Township.

The specifications below are to serve as the minimum standard for planting of all Street Trees. They will apply regardless of whether the actual work is preformed contractually, by Public Works and Engineering staff, or by private individuals. As with many standards applied on a large scale, there will be exceptions. To avoid unnecessary problems or damage to the Township's urban forest, the Department of Public Works and Engineering must review the exceptions.

Tree Selection Criteria:

Carefully select the species which possess the characteristics which most closely meet the environmental conditions of each site (e.g., Do not select salt sensitive species for high traffic areas).

Other concerns that should be considered include as a minimum:

- Stress - considers the tolerance to conditions such as compacted soil, diseases, drought, insects, and road salt spray.
- Time – consider which species can be transplanted / moved at specific times in the year.
- Native – consider trees indigenous to this region for use as in areas found in close proximity to green spaces
- Fruit – consider the size and season and abundance of fruit produced by some species making them less desirable in specific locations.

- Disease – consider the potential for widespread mortality and costly removal and replacement programs generating public and political concerns with trees such as Norway Maple, American Elm, Ash trees. Avoid mass plantings of a single species.

Tree Size

The Township places a priority on the planting of Large Stature Trees (LST) and Medium Stature Trees (MST) in accordance with the **Error! Reference source not found.** below and the required soil volume to maximize community benefits while minimizing long-term life cycle costs.

Table 0-2 Mature Tree Size

	Diameter at maturity	**Standard spacing**
Large Stature Trees (LST)	≥ 60 cm	10 m
Medium Stature Trees (MST)	≥ 40 cm	10 m
Small Stature Trees (SST)	≤ 20 cm	7 m

Note: Tree stature refers to the mature size of the tree, and not species of trees, recognizing that trees adapt to the site conditions they are growing in (e.g. dwarf cedar trees growing on Niagara escarpment). To maximize community benefits, these standards place a priority on the planting of large and medium stature trees with the required soil volume.

Tree Location

In general, the use of best management practices when locating and planting trees is vital since there is variation in boulevard and site conditions.

Tree planting is to be undertaken in development projects after each lot has been developed and the final grading and sodding completed. For Capital projects, tree planting is to be undertaken after all other surface works have been completed thereby reducing tree stress and mortality.

The overall goal is to plant one tree per lot or one every 8 to 15 metres where practical and where growing space is available. Since large trees contribute more to the environment than small ones, the largest tree at maturity that fits the location is to be planted. The following are criteria will be required at a minimum.

All trees are to be planted on Township property or on the property line. Where a tree cannot be planted at these locations, the tree can be planted on the private property in the front of the lot.

Lot Width Considerations:

- Where lot width is:
  - Equal to or less than 9 metres, plant one tree per lot selecting a small shade or ornamental tree, depending on spatial constraints from the accepted / approved Street Trees.
  - Between 9 metres and up to 15 metres, plant one tree per lot selecting a large or small shade to ornamental tree, depending on spatial constraints, from the accepted / approved Street Trees.
  - Lot is greater than 15 metres, plant one tree per lot selecting a large or small shade to ornamental tree, depending on spatial constraints, from the accepted / approved Street Trees list.

Curb to Property Line Considerations:

- Where no sidewalks exist or where sidewalk construction is not planned, plant trees 1 meter outside the private property boundary on municipal property.
- Where a boulevard between curb and sidewalk exists, that is greater than 2 metres, plant large to small trees in the centre of the boulevard - assuming no overhead utility or other obstructions.
- Where a boulevard between curb and sidewalk exists that is 1.2 metres to 2 metres plant, ornamental or small shade trees shall be planted in the centre of the boulevard, assuming no obstructions.
- Trees are not to be planted within boulevards, which are less than 1.2 metres wide. In this case – the tree shall be planted in municipal property, between the property line and the sidewalk or on the property line.
- Trees must be aligned along the street in uniform pattern (spacing, setbacks) along the entire street to provide a linear pattern. Exceptions to this may be for utility conflicts and intersection requirements (i.e. sight distance) under the review and acceptance of the Director of Public Works and Engineering.
- On streets where the majority of the lots are 11 metres in width or less, the trees shall be placed on the property line.

General Requirements/ Consideration:

- Plant only ornamental tree varieties under overhead utility wires.
- No tree is to be planted within the required visibility triangle as per Township Zoning Bylaws.
- In all subdivisions, street trees shall be planted either in the boulevard, or if not possible on the property line or on front yards of the property. In all cases attempting to maintain linear uniform pattern shall be the goal. If either of these locations cannot sustain a healthy tree environment, the front of the property will be considered;
- Trees shall not be planted on cul-de-sac islands.
- For new sidewalks, to encase a tree, a minimum of 2.5 square metres of porous area is to be left surrounding the tree;

- Trees should not be planted in a direct line with the drainage swale between lots or directly above underground utilities.
- Trees shall be selected to generally - reach a height of 7 metres where power lines exist, and a height of 12 metres where there are no power lines, sewers, and water mains;
- Trees shall be resistant to road salt damage if within the 4 metres of the travelled/paved road allowance;
- Not be prone to easy damage by weather conditions;
- Be resistant to common tree diseases (i.e., elm disease, emerald ash borer);
- Shall not be a fruit tree (fruit from tree will fall on roads and sidewalks);
- Certain trees with undesirable characteristics such as fruit, low branches, unpleasant odors, excessively thick foliage, susceptible to disease, or large root systems are prohibited. Willow, Poplar and Cottonwood trees are not permitted. In commercial areas or in those areas in which sidewalks are required or required to extend from the curb to the property line, street trees shall be planted in the sidewalk area in a 1.2 square metre area minimum, adjacent to the curb.

Dealing with Conflicts:

When a conflict exists in the placement of street trees, the following two elements must be considered at a minimum:

- The relocation or alternative placement of the proposed tree, and
- The implications of changes along the entire street.

To evaluate the long term impact of the conflict and if the original design requirement can be met with minimal risk, the following is proposed.

Figure 0-2

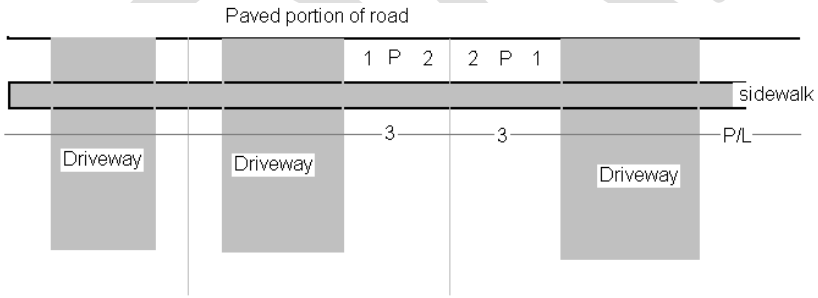

The preferred location (P) is the first location, if conflicts look to move the tree closer to the driveway (to maximize separation or equal spacing of trees) and then to closer to property line. If the tree cannot be located in the boulevard (P, 1, or 2) the tree should be moved on the other side of the sidewalk and placed on the lot line (3).

If there are a number of conflicts on the street along one side or another, all of the trees should be moved to the property line (position 3) to maintain a uniform planting pattern.

Utility Conflict Considerations:

- Where utility items such as pedestals, boxes, street light poles etc are located in the area which conflicts with the overall street tree placement in uniformity with other street trees. To address the conflict, consider the following, at a minimum:
  - Locate all street trees to maintain the linear uniform pattern
  - Create a consistent uniform pattern along the entire street.

Rural tree Locations

1. Standard urban tree planting requirements shall also apply in any rural planting situations.
2. Where a ditch exists the tree must be located on the road allowance, the tree shall be located on the side of the ditch furthest away from the road. No tree shall be planted in the low point of the ditch.
3. No tree is to be planted closer than 2 meters to a driveway, sidewalk going into a property, underground vault, storm or sanitary sewer.

Tree Species and Timing

Only trees noted in the Township's approved planting list are permitted as street trees or Municipal planting.

Generally, native trees are preferred and where possible make up the majority of the proposed tree plantings.

The Township may permit other trees as recommended by a Landscape Architect on a case-by-case basis. Trees with large and/or messy fruit, thorns, seed pods etc. are generally not permitted, exceptions for limited design statements may be permitted by the Township.

Coniferous trees needle-bearing trees are not permitted in a road allowance as a street tree.

All street trees are to be deciduous or broad-leaved trees appropriate for the Hardiness Zone in which Township is located.

Trees with similar shape (e.g., oval, upright) as other surrounding street trees are to be selected to provide a closed canopy effect.

Trees are to be planted as each stage / phase of development continues, and at a maximum, 1 year after the date on the final lot grading certificate.

Trees of the same species can be clustered in groupings no more than 5 trees per grouping.

The Public Works and Engineering Department shall be consulted early regarding the species list and layout. Final list of species and layout shall be completed in collaboration with the Landascape Architect and the Director of Public Works and Engineering.

Tree Planting

1. All plantings shall be in accordance with the Canadian Standards for Nursery Stock (current Standards) as prepared by the Canadian Nursery Trades Association.
2. Workmanship is to meet standards of Ontario Landscape Contractors Association.
3. Shall include all labour, material and related services necessary to furnish and install all plantings indicated on the Accepted Issued for Construction Drawings or Final Contract specifications. The work includes, but is not limited to the following:
   - **Furnishing:** providing the plant material, including delivery to site. Making a concerted effort to minimize the time between the plants being dug in the nursery and the actual time of planting.
   - **Installation:** installing of the plants listed on the plant list. Planting to take place while material is dormant during the spring (May 1st or June 30th) and fall (September 1st to October 31st). Planting should consider weather temperature to avoid frost damage and shock to trees. Trees shall not be planted during the summer months.
   - **Mulching:** mulching all trees to a depth of 10 cm. contained in a 10 cm. deep edge - keeping the mulch away from the trunk.
   - **Staking:** staking all trees (in accordance with Township of Wilmot standard drawings), one metal fence stake, or two 2x2 wooden stakes or equivalent are to be used to support the tree for the first two years of growth. Stakes are to be installed beside the root ball so as to reduce potential damage to the roots. Stakes inserted beside the root ball, shall be installed into the sub-grade and tied to the tree using a non-fungicide treated binder twine or approved alternative. Stakes shall be in the direction of prevailing wind to provide best support. Stakes and ties must be removed prior to the Letter of credit for the subdivision being released.
   - **Watering:**
     - Thoroughly watering all trees at the time of planting with water that is suitable for irrigation and free from ingredients harmful to plant life.
     - A water bag (Oasis/Gator bag or approved equivalent) shall be installed, and the Subdivider/Developer is to ensure the bag is filled appropriately to provide a constant water source.
   - **Information:** The Subdivider/Developer is to inform the homeowners of the planting routines and provide information on proper tree care (instruction for watering, monitoring and who to contact) following final acceptance.
   - **Planting Holes:** creating a minimum 1.2 metre square planting area or 1.5 times the width of the root (whichever is greater) with a 10 cm. deep edge to minimize grass competition.
   - **Planting Soil:** using 100% indigenous topsoil to avoid creating container type growing conditions. In tight buffer locations and planting islands where trees are encouraged to be installed, consider using structural soils (i.e Triple Mix), structural cells, and/or trench planting methods to achieve the minimum target soil volumes.
   - **Soil Volumes:** The following minimum soil volume targets shall be met:
     - $30m^3$ for every one or two large canopy trees in an area
     - $17m^3$ for every one or two small canopy trees in an area

- **Fertilizer:** is not required, if used; only a slow release fertilizer shall be used to promote root development (i.e., 10-25-10)
- **Tree Root Protection:** taking all necessary measures to ensure that the tree roots are protected from the elements (freezing and drying) by proper heeling-in, muddling and proper packing for transportation.
- **Debris Disposal:** Any rejected plants, soil, pruning, binding and/or any other material which has been brought to the project site shall be removed promptly, keeping the area clean at all times. Upon completion of the planting, all excess soil, stones and debris, which have not been previously cleaned up, shall be removed from the site and disposed of. All ground disturbed as a result of the planting operations shall be restored to its original appearance or to the desired new appearance. Street sweeping shall be completed once topsoil, sodding, and tree planting is completed.
- **Setbacks:** Trees are to be planted in such a manner that ensures they will not be in conflict with Township or Utility infrastructure or obstruct sightlines/visibility triangles of driveways or intersections. The following setbacks apply for tree placement and installation
    - Major Underground Utilities: 2.0 m
    - Light Standard: 4.0 m
    - Utility Pole: 4.0 m
    - Fire Hydrants: as per NFPA
    - Water Valves: 2.0 m
    - Transformers: 1.5 m to 3.0 m from opening
    - Driveway Access or Curb Cut: 1.5-2.0 m
    - Bus Stops: 2.0 m
    - Storm/Sanitary Catch Basin: 1.5 m
    - Intersection stop sign: 12.0 m measured from the curb line
    - Sidewalk and other impervious surface: 1.0 m
    - Centreline of any underground servicing connections: 1.5-2.0 m
    - Locate trees outside of the Visibility Triangle Area (Refer to Section 5 for information regarding Visibility Triangles)

Planting Requirements

These specifications are to serve as a standard for the planting of all street trees. The Township Public Works and Engineering shall review and accept all tree planting on the public right of way.

Municipal capital projects shall provide for street tree planting in existing neighbourhoods only through their annual reforestation program. As the Township is a mix of urban and rural environments, development may take place in both urban and rural settings.

Subdivision, Site Plan and Infill Developments shall provide for street tree planting as part of the Right of Way requirements. Street Trees shall be located on the public right of way and adhere to the design objectives, spacing and location requirements of this document. All tree

planting on the public right of ways shall be reviewed and accepted by the Public Works and Engineering Department.

No plants shall be dug or prepared until their location is reviewed by the Public Works and Engineering Department. The locations for the trees shall be staked for discussion and reviewed prior to planting taking place.

At the time of planting:

- The minimum acceptable tree size is 60 mm (2 in) measured at 15 cm. above the stem flare. (stem flare is the taken from where the stem of the tree from where the roots flare out which should roughly be the soil line depth. On young trees this is the preferred method of measure.)
- Trees must be in good health, with no bark scrapes, broken branches, insect of disease problems, heading back, and excessive root pruning.
- Only trees dug with a tree spade and balled, burlapped or container grown are acceptable.
- All trees must be guaranteed for a minimum of two growing seasons.
- The landscape architect must provide the Public Works and Engineering Department a list with the street address and species of trees planted, and the date when the trees were planted (in an Excel Format and as part of the final “As Constructed” plans).
- Replacement trees are to be to the same standards as noted above and must be planted within 6 months. An extended 2 year warranty shall be applied on replacement trees.

Street Tree Planting shall be bare root stock, balled and burlapped, or container and shall only be pruned to promote strong scaffold branching i.e., remove dead or poorly structured branches. V branching less than 45 degrees and trees with co-dominate leaders will not be accepted. Trees shall never be clipped back or topped.

The following are the minimum sizes for plant material. Larger sizes may be required to provide a landscape effect.

- Caliper: 60 mm
- Root Ball Diameter: 70 cm

No single species shall make up more than 30% of the total subdivision Street Tree population per street. This is to prevent disease susceptibility and eventual uniform senescence.

Pruning may be required after planting at the discretion of the Public Works and Engineering Department.

Guidelines for demarcation and tree planting

Where demarcation is required under a development agreement (i.e., plan of subdivision, consent) demarcation using trees in conjunction with monuments is preferred. Trees shall be installed between each monument.

Refer to Section 1.8 for details regarding demarcation monument placing and dimensions.

Tree Preservation

Depending on the nature of the existing site conditions, the Public Works and Engineering Department may require a Tree Preservation Plan as part of the Infill, Site Plan and Plan of Subdivision submission.

Tree retention and replacement:

Purpose statement

The purpose of this procedure is to outline the required action to protect trees during construction. This procedure shall represent the standard specifications for tree protection whenever tree protection measures are required by the Public Works and Engineering Department. Higher standards of tree protection may be imposed where warranted at the direction of the Director of Public Works and Engineering having regard to the size, variety, location and health of the tree, and any circumstances surrounding the construction which requires additional tree protection measures.

Scope

This procedure applies to Township trees covered under any municipal process or agreement relating to construction within the Right of Way, SWMF, etc.

General procedure

Township trees (on Property line or within Municipal Right of Way, SWMF etc.) required to be removed as a result of construction activities must receive approval by the Public Works and Engineering Department. If approval is granted for removal of Township owned trees, the applicant will assume all costs/liability involved and shall either:

1. Pay the amenity value of the tree(s) calculated in accordance with the most recent International Society of Arboriculture Guide for Plant Appraisal; or
2. Plant the equivalent number of trees based upon a “no net loss or canopy cover” objective as determined by the Township Public Works and Engineering Department. Where tree relocation is approved, the applicant will assume all relocation and establishment costs.

The Tree Protection Zone

The Tree Protection Zone (TPZ) is the minimum setback required to maintain the structural integrity of the tree’s anchor roots, based on generally accepted arboricultural principles. If trees are protected to the TPZ then the tree’s anchor root structure is expected to be maintained.

No unauthorized activities may take place within the TPZ of a tree covered under any municipal permit process or agreement. The following chart shows the TPZ. Some trees and site conditions may require a greater setback at the Public Works and Engineering Department's discretion

Diameter of Trunk (DBH)[2] in centimetres	**Tree Protection Zone[3]** Distance from trunk measured in metres
<10	1.8
10-30	2.4
31-50	3.0
51-60	3.6
61-70	4.2
71-80	4.8
81-90	5.4
91-100	6.0

1. For trees over 100 cm. DBH, add 10 cm. to the TPZ for every centimetre of DBH.
2. Roots can extend from the trunk to 2-3 times the distance of the drip line.
3. Diameter at breast height (DBH) measurement of tree trunk taken at 1.37 metres above ground.
4. Tree Protection Zone distances are to be measured from the outside edge of the tree base towards the drip line and may be limited by an existing paved surface, provided the existing paved surface remains intact throughout the construction work.

Tree protection barriers

Trees within or adjacent to a construction site must be protected during construction by means of a barrier and meet the following specifications:

- Tree protection barriers must be erected prior to the commencement of any construction activity that may injure a tree on the site and are to remain in place throughout the entire duration of the Development, Capital, Municipal Consent project. The applicant shall notify the Public Works and Engineering Department in writing prior to commencing any such activities to confirm that the tree protection barriers are in place.
- The tree protection barriers specified herein must remain in a condition satisfactory to the Township until all site activities including landscaping are complete.

- Authorization from the Public Works and Engineering Department be obtained prior to the removal of tree protection barriers.
- If some fill or excavated material must be temporarily located near the tree protection barrier, a wooden barrier must be used to ensure no material enters the TPZ.

Tree Protection Zone

- No grade change, storage of materials or equipment is permitted within this area.
- Unauthorized removal of the tree protection barrier or other contraventions may result in with holding funds, actions by the Township to remove the material, etc.

Arborist Report:

An Arborist Report is required: where multiple trees are involved in a Capital Project, Municipal Drain a Municipal Consent, and/or a planning application at the discretion of the Township.

An Arborist Report shall be prepared by an Arborist and must include but is not limited to the following:

- Species referenced to municipal address, ownership and location through an accurate plotting and identification of all trees on the plan;
- Diameter at breast height (DBH), measured in centimeters at 1.37 metres above ground level;
- Crown spread (Drip Line), measured in metres;
- Tree health/disease;
- Soil compaction inside the TPZ using methods approved by the Township;
- Tree risk assessment for trees deemed hazardous as assessed by the arborist, must be provided in accordance with “Best management Practices, Tree Risk Assessment, International Society of Arboriculture” as revised from time to time, including a photographic record of each tree as required by the Township; and
- For each tree identified as being preserved and each tree recommended for removal, the valuation as determined by the most recent International Society of Arboriculture’s Guide for Plant Appraisal.

The Township may request additional information in an arborist report for Capital projects, Municipal drainMunicipal Consents, and planning applications at the discretion of the Township Public Works and Engineering Department.

Securities for tree protection:

Where tree protection measures are required as a condition of any approval / acceptance or permit for Capital, Development and Municipal Consent Projects, the Public Works and Engineering Department will require securities to secure the protection of trees. The required securities, as determined by the Public Works and Engineering Department shall be held by the Township for a period specified by the Township (minimum 1yr). Early release of securities may occur provided the Director of Public Works and Engineering is satisfied that the tree has

not been damaged. Applicants requesting for the early release/reduction of securities or final release shall submit for acceptance an Audit from an arborist certifying that the tree is in a state of vigorous health and has not been injured or destroyed as a result of the construction activities.

Tree Protection Audits

Tree Protection Audits prepared by an arborist are required for all trees present or adjacent to a construction site when activity, or the potential for activity, takes place within the TPZ. A schedule of audits by an arborist will be specified at the discretion of the Public Works and Engineering Department and shall consist of a minimum of three written site inspection reports. These tree protection audits shall include the following:

- Tree Impact Evaluation:
  - Disturbances which occurred within TPZ
  - Excavation distance from the trunk and depth of excavations (e.g. grade changes, underground utilities, pavement section, footings, foundations, etc.)
  - A soil compaction comparison to pre construction condition
  - Distance and diameter of any severed structural roots (greater than 25mm in diameter) to the trunk
- Mitigation process and costs:
  - Pruning, irrigation, fertilization, and mulching requirements
- Tree Hazard mitigation, if applicable
- Tree replanting program, if applicable
- Soil amendments (e.g. soil aeration, soil removal and replacement, etc.)
- Recommendations for removal of severely damaged or hazardous trees
- Provide photographic records where appropriate
- Compliance with this procedure
- Failure to comply with this procedure may result in one or more of the following:
  - An Order to Comply
  - Loss of security in whole or in part
  - Prosecution under an applicable by-law
  - Additional remedial costs as determined by the Township

Sodding

Turf grass nursery sod, specially sown and cultivated in nursery field in all compliance with the specifications of the latest issue of the Nursery Sod Growers Association of Ontario for (A) Number One Kentucky Bluegrass-Fescue Sod shall be used.

Sodding shall be as per TWSS 803 and the following but not limited to:

During dry weather is acceptable only if sufficient and continuous watering is assured. Delivery is to be scheduled in order to keep storage on the job site to a minimum without causing delays. Sod shall be delivered, unloaded and stored on pallets. Sod shall be delivered to site

within 24 hours of being cut and laid within 36 hours of being cut. Small, irregular or broken pieces of sod shall not be delivered.

During dry weather, protect sod from drying and water sod as necessary to ensure its vitality and prevent dropping of soil in handling. Sod which dries out will be rejected. Sod laying shall be scheduled with topsoil operations. Do not begin to install sod without inspection and acceptance of subgrade and topsoil preparation. Topsoil must be free of stones, debris and weeds and fine graded to grade indicated on plan prior to start of sodding operation. See Section **Error! Reference source not found.** for more details.

All slopes at 3:1 require pegging. Slopes greater than 3:1 will not be accepted. Lay sod even with adjoining landscape areas. The rows shall have staggered joints. Sod joints shall be cut into existing grassed areas when applicable. A smooth transition shall be applied for maintenance purposes. Butt sections closely without overlapping or leaving gaps between sections. Cut out irregular or thin sections. Provide close contact between sod and soil by means of a light roller. Heavy rolling to correct irregularities in grade is not permitted. Water sod immediately after laying to obtain moisture penetration into top 150 mm of topsoil.

Sodded areas may be accepted provided that sod is established and free of bare or dead spots and weeds. It is the Subdivider/Developer/Contractor's responsibility to maintain the sodded areas in good condition until Final Acceptance of the Capital, Municipal Consent, Development project. Provide adequate protection of sodded areas against erosion and other damage. Remove protection after sod has become established. Maintenance includes but is not limited to weeding, fertilizing as required by soil tests, cutting as required to maintain sod at a maximum height of 60 mm and watering.

Natural Area Restoration

For restoration or enhancement of natural areas, a report completed by a qualified Landscape Architect should outline the feature and plant species found within and propose any enhancement or restoration with the use native species adjacent to natural areas, or appropriate cultivars. Native species should be those found in the feature or found in other such features across the Region.

Boulevard / Round-a-bout / Cul-de-sacs

The following are standards for the landscaping of boulevard, round-a-bouts, islands etc. The Township Public Works and Engineering Department shall accept all soil conditions and planting on the public right of way.

Subdivision Developments shall provide for boulevard / island landscaping in addition to tree planting, as part of the development process. 50% of the capital construction costs is to be provided to the Township for maintenance of the landscape features.

Boulevard

In addition to the sidewalk, a landscaped strip shall be provided between the curb and the property line. The boulevard shall be installed as per the following:

- Edges will be tapered, and adjacent sod will be installed flush to the finished surface of walkway so as not to trap water on the pathway surface.
- Topsoil shall be installed at a depth of 450mm.
- Shall be a minimum of 1.5 metres in width

Round-a-bout/ Traffic Circles/ Cul-de-sac Islands

Where required, roundabouts, traffic circles and cul-de-sac islands strip shall be provided to the satisfaction of the Public Works and Engineering Department and as per the following:

- Topsoil shall be a minimum of 450 mm in depth
- Where plantings are required, they shall be installed as per the planting criteria.
- Generally, appropriate and easy to maintain plantings shall be provided in the center of traffic islands and roundabouts.

Snow Storage

- At traffic circles and cul-de-sac islands, a grassed area or concrete strip of 1.5 to 2 metres shall be provided around the edge of the island for snow storage. Round-a-bouts require a concrete strip of a minimum of 3 metres around the edge for snow storage.
- Where overflow parking or bio-retention areas are provided, these areas may be used for snow storage.
- Hard surfaced areas used for snow storage are encouraged to retain snowmelt on-site.
- Ensure overland flow routes and stormwater inlets and outlets are clear of debris and snow piling.

5.11 Street lighting

Within the Township of Wilmot, streetlighting design is completed by Kitchener-Wilmot Hydro (KW Hydro), with the exception of Ornamental Streetlighting Design. Street lighting is to be designed by a qualified electrical consulting engineer and in accordance with all applicable regulating authorities, meet ESA and ANSI/IES RP-8-18 as amended.

The specifications for standard streetlighting equipment for the Township of Wilmot include:

- Cobra-head luminaire, Leotek Electronics, GreenCobra part numbers: GCJ0-15HMV-WW-2R-GY-700-PCR7-CR, GCJ1-20H-MV-WW-2R-GY-580-PCR7-CR or approved equivalent;
- Round, concrete StressCrete part number: E32.5-BPR-G-MOO S/F 120, or approved equivalent.
- Street poles shall include future connections for the 5G network infrastructure / capabilities

The installation of the streetlighting system must be completed by KWHydro or an approved Contractor at the cost (including supply of all standard streetlighting equipment) and energized prior to occupancy.

ORNAMENTAL STREETLIGHTING

Within residential subdivision, Subdividers have the opportunity to request ornamental streetlighting as an alternative to the standard municipality approved streetlighting equipment. The Subdivider shall confirm whether ornamental lighting will be used for the subdivision prior to servicing. The Township has established a standard for ornamental roadway streetlighting in new plans of subdivision regarding illumination levels and equipment.

The following conditions and responsibilities between the Township, Kitchener-Wilmot Hydro Inc., and Subdividers shall apply but not limited to.

- The Subdivider will obtain consent from the Director of Public Works and Engineering for installation of the approved ornamental streetlighting equipment;
- The Subdivider will show proof of consent to Kitchener-Wilmot Hydro Inc., after which, street lighting design will proceed based on use of Township approved ornamental streetlighting;
- A determination if ornamental lighting would be permitted will be the type of lighting that has been installed in adjacent plans of subdivision (if present) and urban design vision for the character of the development. The intent being that on connecting streets, between plans of subdivision, the lighting style will be consistent. The use of standard or ornamental roadway lighting throughout the development will be as directed by the Director of Public works and Engineering having jurisdiction within the roadway corridor. Where possible, Subdividers are encouraged to work together and proposals for lighting for adjacent plans must be submitted to Kitchener-Wilmot Hydro Inc. for review;

Financial

The Subdivider will be responsible for 100% of the capital cost for ornamental street lighting equipment, as well as, any additional engineering design costs, including extra poles for closer spacing. A detailed cost estimate for the decorative street light (DSL) system is to be provided

Maintenance

- In view of the substantially higher capital cost of the upgraded ornamental street lighting equipment and increased maintenance costs over the normal Township approved standard, Subdividers are required to contribute a one-time cash contribution towards future maintenance and replacement costs. The contribution will be equal to 20% of all the capital equipment/material costs (concrete base, decorative pole arm/bracket,

decorative light fixtures, power supply pedestals, etc) plus applicable taxes for such equipment/material or a minimum of $30,000.00, whichever is the greater, prior to Township approval and Initial Acceptance of the subdivision stage underground services. The contribution will be paid directly to the Township. The Subdivider will include, along with payment, copies of all invoicing from the streetlighting. Proof of payment is to be submitted to KW Hydro before streetlighting system energization authorization will be given;

- The subdivider will be responsible for all maintenance costs for streetlighting within the development as per Minimum Maintenance standards Regulation 239/02 until final assumption of the subdivision has been accept by the Township. Decorative street lighting is considered part of the surface works and subject to the applicable maintenance period. This includes costs due to but not limited to theft, weather, vandalism, and damage caused by construction, manufacturer defects, etc;

- Kitchener-Wilmot Hydro Inc. will, if so requested by the Subdivider, perform any required ornamental streetlight maintenance. Costs relating to such maintenance will be charged on a time and material basis to the Subdivider. Replacement equipment for emergency maintenance purposes shall be billed to the Subdivider.

- Provide an operation / maintenance manual (1 full sets in binder, USB drive). The operation / maintenance manual is to include but not limited to all decorative streetlighting (DSL) plans and schematics, details of the light fixture, bulb info including arm and pole assembly. Provide part numbers and contact info for replacement parts and include all applicable approval for the DSL system (i.e. ESA, KW Hydro, etc).

Design

Selection of ornamental streetlighting equipment will be limited to the Townships approved equipment as described in the material section below. Substitutions of equipment will not be accepted unless approved in writing by the Township Public Works and Engineering Department.

The Subdivider shall provide the streetlighting photometric design layout of the development, supply drawings and specifications. Street lighting is to be designed by a qualified electrical consulting engineer and in accordance with all applicable regulating authorities, meet ESA and ANSI/IES RP-8-18 as amended and other information thereof to the Township of Wilmot and Kitchener-Wilmot Hydro Inc., but not limited to:

a. Luminaire mechanical and electrical details.

b. Pole construction and installation details.

c. Overall layout and dimensional locations of all poles and luminaries along roadway allowance. Locations are to be reviewed and approved by the Subdivider in regard to location conflicts with driveways, services and other street/walkway/park furniture, trees, etc.

d. Light level calculations to confirm that the roadway and intersection lighting levels will meet the Township standard See attached Tables 1 & 2 for recommended values from ANSI/IESNA RP8-18 or as amended.

Note that Kitchener-Wilmot Hydro Inc. will designate the road and pedestrian conflict area classification for each street within the development and indicate the light level to be achieved. It is desired level at a reasonable luminaire spacing of approximately 35.0-45.0 metres. Over illumination of areas, in view of luminaire wattage standardization by the Subdivider, will not be permitted.

e. The preferred layout of poles and luminaries is on both sides of the roadway in a staggered pattern. Exceptions shall be on divided median roadways and at intersections.

Table 1

Street Classification	**Pedestrian Activity Classification***	**Average Luminance L_{avg} (cd/m2)**	**Average Uniformity Ratio L_{ang}/L_{min}**	**Maximum Uniformity Ratio L_{max}/L_{min}**	**Maximum Veiling Luminance Ratio $L_{v,max}/L_{avg}$**
Major	High	1.2	3.0	5.0	0.3
	Medium	0.9	3.0	5.0	0.3
	Low	0.6	3.5	6.0	0.3
Collector	High	0.8	3.0	5.0	0.4
	Medium	0.6	3.5	6.0	0.4
	Low	0.4	4.0	8.0	0.4
Local	High	0.6	6.0	10.0	0.4
	Medium	0.5	6.0	10.0	0.4

	Low	0.3	6.0	10.0	0.4

Table 2

Illuminance for Intersections				
Functional Classification	**Pedestrian Activity Level Classification**			Eavg/Emin
	High	Medium	Low	
Major/Major	34/3.2	26/2.4	18/1.7	3.0
Major/Collector	29/2.7	22/2.0	15/1.4	3.0
Major/Local	26/2.4	20/1.9	13/1.2	3.0
Collector/Collector	24/2.2	18/1.7	12/1.1	4.0
Collector/Local	21/2.0	16/1.5	10/0.9	4.0
Local/Local	18/1.7	14/1.3	8/0.7	6.0

Kitchener-Wilmot Hydro Inc. will be responsible for:

a. Underground cable design and layout.

b. Streetlighting control system design.

c. Co-ordination of fixture or pole locations with the electrical distribution locations in consideration with the items above.

d. approving the street light design

Construction

Purchase, Shipping and Storage of Streetlighting Equipment

a. Subdividers will be responsible for purchase and storage of ornamental streetlighting equipment and the control nodes (one per luminaire) associated with each stage of subdivision development. Information will include manufacturer, model number, style and quantities.

b. The equipment referred above shall include (but not necessarily be limited to: poles, luminaries, and support brackets.

c. The Subdivider will store and make accessible, all equipment in a secure location on the subdivision development site. Kitchener-Wilmot Hydro Inc. will not transport any Subdivider purchased equipment from locations remote from the development site. Disposal of equipment packaging material shall be the responsibility of the Subdivider.

d. Poles, and fixtures should not be shipped to Kitchener-Wilmot Hydro Inc. unlessspecial arrangements are made in advance. In this case, a fee of 20% of the shipment invoice will be applied.

Installation

a. Kitchener-Wilmot Hydro Inc. or its approved Contractor will make all necessary installations of equipment associated with streetlighting on the public right-of-way within the development.

b. The Subdivider shall make all necessary installations of lighting as required in the following areas:

i) Public walkways;

ii) Parks, and

iii) Privately owned lands or developments.

c. Kitchener-Wilmot Hydro Inc. will be responsible for:

i) Obtaining poles and fixtures from the secured onsite storage area;

ii) Installing poles and fixtures;

iii) Installing underground cable and controls, and

iv) Connecting and energizing fixtures and luminaire control nodes.

d. The Subdivider shall coordinate other construction activities of the development with installation of the streetlighting system.

Material Selection

The specifications below are the approved ornamental streetlighting equipment for the Township of Wilmot.

LUMINAIRE:	
Manufacturers:	King Luminaire Inc., Holophane
Style:	Washington Full cut off
Optical System:	Flat Array
IES Lighting Classification:	Type II, Type III, Type IV, Type V
Wattage	LED 40W to LED 140W (to suit road classification)
Colour Temperature:	3000 Kelvin
Dimming:	Control-ready wired for wireless node dimming
Input Voltage:	MVOLT, 120 Volts AC
Wiring Accessories:	Setscrew, Quick disconnect wiring harness
Globe Ring Assembly:	“Rotolock”tool free globe removal c/w glove hanger and globe hanger hook
Pole Adapters:	K5 / K9 Capital (for use on single pole top locations to accept a 7-inch OD tenon) K16 Capital (for use with poles having KA65 Lansing twin arms and single locations on Hydro poles (using K69S brackets with 3.5-inch OD tenons)

	Modern Style - Swing Open Design c/w TC-P7C/3T-BK – Transitional aluminum from 7” diameter post capital to 3” diameter tenon PTA-35R-30R to transition from 3.5” to 3” tenon
Ornamental Accessories:	Non
Paint Colour:	Black

POLE:	
Manufactures:	King Luminaire Inc., Holophane
Type:	KT14 Talisman, KT13 Talisman (for twin arm), Victoria direct buried concrete pole with 3 HHB’s
Finish:	E10 Midnight Lace Erched Finish
Colour”	Midnight Lace E-10
BRACKET:	
Manufactures:	King Luminaire Inc., Holophane
Twin Arms:	KA65-Lansing Arm, Northbrook NP28
Single Arm:	K69-S, Annapolis ACA/1 (for mounting on KW poles)

Section 6 – Sanitary Sewers

6.1 Sanitary Sewer Introduction

The purpose of the Sanitary Sewer Specifications are to outline the design criteria for sanitary sewer infrastructure within the Township of Wilmot.

Documents beyond this Infrastructure Standards and Specifications that may be applicable for an engineering design include, but are not limited to, the as amended versions of:

- MOECP Design Guidelines for Sewage *Works*
- Ontario Provincial Standard Specifications (MUNI)
- Previous studies / Masterplans
- Provincial Acts / legislation
- Region of Waterloo Water and wastewater Monitoring report
- Canadian Standards Association (CSA)
- American Society for Testing and Materials (ASTM)
- Provincial / Regional / *Township* planning documents
- Inflow / Infiltration Best Management Practices
- Region of Waterloo Design Guidelines and Supplemental Specifications for Municipal Services (DGSSMS)
- Ontario Building Code
- Region of Waterloo By-laws
- *Township* By-laws

The *Township*'s Infrastructure Standards and Specifications is to be read in conjunction with the Region of Waterloo and Area Municipal Design Guidelines and Supplemental Specifications for Municipal Services (DGSSMS). In the case that the *Township*'s Infrastructure Standards and Specifications differs from the DGSSMS, this document will supersede the DGSSMS.

Definitions

Public Sewage Systems:

A piped collection system that transports wastes of domestic origins which is human body waste, toilet or bathroom waste, waste from other showers and tubs, liquid or waterborne culinary and sink water or laundry waste, and such other waste as is suitable for treatment at a sewage treatment facility. All to be in accordance with *Township* and Regional Sewer Use Bylaw.

Private Sewage Systems:

A sewage system (or systems), with a total design capacity of 10,000 litres per day or less, shall be designed, constructed, operated and maintained in accordance with Part 8 of the Ontario Building Code.

A sewage system (or systems), with a total design capacity greater than 10,000 litres per day, falls under the jurisdiction of the Ministry of the Environment, Conversation and Parks.

Sanitary sewers on private property are regulated by the Ontario Building Code (OBC). Where there are no specific regulations in the OBC, details from this document will apply.

Building and Private sewers as defined by OBC shall be designed and installed using the regulations of the OBC. Building and private sewers, as defined by the OBC, will be inspected by Municipal Building Officials to confirm compliance with the OBC.

6.2 Sanitary Sewer Design Criteria

DGSSMS Supplementary Guidelines

The Region of Waterloo and Area Municipal DGSSMS Part B – Design Guidelines form the basis of the design criteria except as extended or amended herein. This section's headings have been matched to the section headings of the DGSSMS. The following outlines the supplementary design criteria to be applied to the design of sanitary sewer *Works* for *Development* and Capital projects in the *Township*.

Sanitary Sewer Design Guidelines

Sanitary

Sanitary sewers which are studied, designed and constructed in accordance with the most recently revised specifications of the *Township*'s Infrastructure Standards and Specifications shall be required in all capital and *Development* infrastructure projects unless specifically exempted from this requirement by the *Public Works and Engineering Department*. All sanitary sewers shall be designed in such a manner to ensure the absence of extraneous flows using best available technology. Sanitary sewers shall also be designed for adequate size and depth to provide for the service of adjacent *Lands* within the sewershed as per the MOECP design guidelines and in addition where so required by Public Works and Engineering *Staff*. A lateral sewer connection from the sewer main to the edge of the road allowance shall be constructed for each property within *Development* Infrastructure and *Capital Project*s unless other direction is provided by the *Public Works and Engineering Staff*.

All sanitary sewers, appurtenances and connections shall be guaranteed for a minimum period of two (2) years after initial inspection and acceptance of all underground services by *Public Works and Engineering Staff* and shall not be released from the *Maintenance Period* until the sewers and services have been video inspected, and final acceptance issued by *Public Works and Engineering Staff*.

Field verification of the location and invert elevations of the proposed connection point is a required part of the engineering inspection for the quality assurance process. Prior to commencement of the *Maintenance Period* for sanitary connections, as required invert elevations at the property line in table form shall be provided to the *Township on the as recorded dwgs*.

Conditional approval of the functional design and signing of the Site Plan *Agreement*s and secondary suite building permit issuance for construction notwithstanding, the *Township* does not guarantee that sufficient capacity is available in existing infrastructure to provide adequate servicing capacity for a proposed *Development*. A sanitary Sewer Design based on MOECP / DGSSMS must be completed by the *Engineer* using the proposed *Development* flows to confirm that sufficient capacity is available in the municipal system. Field verification of the location and inert elevations of the proposed connection point is a required part of the engineering design.

Sanitary sewers are not permitted to accept foundation or weeping tile drainage or roof drainage.

All sewers shall be designed for an embankment condition.

Residential – Refer to DGSSMS

The Township of Wilmot uses an average flow of 305 L/c/d.

Use populations based on the *Township* zoning.

Population densities for sanitary sewer capacity calculations are to be based on the current Region Official Plan, *Township* Official Plan, and/or Master Plan studies.

Extraneous Flows

In addition to the below requirements, refer to the DGSSMS for details.

Note: Person Per Unit (ppu) densities are not to be used for sanitary flow calculations.

Should the design flow of proposed sewers, using flow from zoning calculations, revised standards result in undersized downstream sewers that were designed using different methodology; the *Township* will require the applicant to evaluate / study the downstream sewers.

Design Flow Calculations

Design Flow **=** Av. Dry Weather Flow **x** Av. Peak Sanitary Flow Factor **+** Infiltration Allowance

Note: sewer mains to be designed to maximum 85% of full pipe capacity. Local sewers are not to be designed over 85% of full pipe capacity. Minimum velocities must be met.

Pipe Depth – Refer to DGSSMS

The maximum pipe depth of a sanitary sewers is 8.0 m. Sewers deeper than this requires additional review by the *Township* / *Peer Review*.

Structure

All sewer maintenance holes shall be benched to the obvert of the outlet pipe on a vertical projection from the spring line of the sewer. The minimum width of benching in all maintenance holes shall be 250mm.

All sanitary maintenance holes constructed in the vicinity of low points, flood plain areas, over*land* flow, within 0.6m of the seasonally high water table shall have the precast maintenance hole sections and Moduloc watertight wrapped on the outside of the structure and include watertight covers.

Size

Precast maintenance hole diameter requirements are as follows:

i. 1200mm Diameter
See OPSD 701.010 and OPSD 701.030 for details and additional design information.
ii. 1500mm Diameter
See OPSD 701.011 and OPSD 701.040 for details and additional design information.
iii. 1800mm Diameter
See OPSD 701.012 and OPSD 701.050 for details and additional design information.
iv. 2400mm Diameter
See OPSD 701.013 and OPSD 701.060 for details and additional design information.
v. 3000mm Diameter
See OPSD 701.014 and OPSD 701.070 for details and additional design information.
vi. 3600mm Diameter
See OPSD 701.015 and OPSD 701.080 for details and additional design information.

Poured Maintenance Holes

Required for maintenance holes which exceed the above maximum pipe sizes for precast maintenance holes. **Note, certification by a Structural *Engineer* is required for all poured maintenance holes.**

Location

Maintenance holes in boulevards shall be located, wherever possible, a minimum of 1.5m from the face of curb or other utilities or street furniture.

Sampling maintenance holes are required to be installed on private property adjacent to the property line fronting the sanitary sewer for all commercial, industrial and multi-residential *Development*s with six (6) or more units, or as deemed required by Public Works and Engineering *Staff* on a case by case bases and / or Region by-law

A maintenance hole at property line may be required at the discretion of *Public Works and Enginerring Staff*. A maintenance hole is required on an existing sanitary main within the right-of-way where the proposed service connection is 200 mm or greater in diameter and/or 30 m or greater in length; measured from point of connection horizontally along the service connection to nearest upstream maintenance hole or point of entry into a building.

Where a maintenance hole is designed to be located within the vicinity of a roundabout, sanitary maintenance holes are not permitted to be located within the grassed area of the roundabout. Sanitary maintenance holes must be located in the asphalt area of the street, for maintenance purposes.

External Drop structures

Refer to OPSD 1003.01 and OPSD 1003.02 for details and requirements of external drop structures.

Services

All sanitary sewer connections shall be inspected and tested at the same time as the sanitary sewer mains. All abandoned services are to be capped at the main with a pre-manufactured end cap.

All sanitary sewer connections shall be guaranteed for a period of two (2) years. This guarantee period shall commence at the same time that the sanitary sewer mains are placed on Maintenance Guarantee.

Note: The standard *Maintenance Period* is two (2) years, however the *Township* reserves the right to extend this term if and where significant deficiencies have existed

and been left unattended or repairs have not been made to the satisfaction of the *Public Works and Engineering Department*.

Odour Control

The MOECP Design Guidelines for Sewage *Works* also provides information and guidelines with respect to odours and corrosion in sewers.

In general, problems have been experienced with the *Development* of sewer gases which cause odours and corrosion of concrete sewer infrastructure due to:

- Hydraulic design which induce turbulence in flow and encourage the release of sewer gases (i.e. sewer forcemains which jet into maintenance holes or chambers, poor benching or transitions where sewers outlet into an existing sewer, high sewer slopes which induce hydraulic jumps, elevation changes with poor transitions)
- Long residence time of sewage in sewer systems (i.e.: sewer systems, pumping stations and forcemains which service new *Development*s and have low flows initially, pumping stations and long forcemains)

It should be noted that effluent quality which exceeds Waste Discharge By-laws also contributes to the potential to create sewer gases.

Every effort is to be made to minimize the conditions or designs which may lead to the creation of sewer gases (odours and corrosion). Where it is not possible to avoid these types of situations, it will be a requirement to mitigate the impacts through the use of means acceptable to the *Public Works and Engineering Department.* Examples of this may be but not limited to:

- The use of chemical dosing of *Township* approved or accepted oxidizing agents to address pumping stations and forcemains with long retention times, either on a short term or long term basis.
- The use of corrosion resistant materials (such as plastic pipe or liners) in situations where it is not possible to improve hydraulic conditions which will introduce turbulence and sewer gas creation.
- Epoxy coating on MHs with forcemain inlet.

Private Drain Connections (PDCs)

Location

PDCs to single family and semi-detached lots are to be located in accordance with *Township* standard drawing WIL-DET-22-18.

PDCs to multi-family (town housing, row housing and apartments site plan concept), commercial and industrial blocks are to be connected to a maintenance hole on the property

line. Townhouses which front the Municipal Right-of-Way are to have one service per townhouse.

PDC's shall be installed at 90° to the sewer main where possible. Under no circumstances will flow from the PDC enter the main against the flow in the main. Where horizontal or vertical bends are required, long radius sweeps shall be used. Short bends are not acceptable. Single family and semi-detached lot Sanitary PDC's shall NOT be connected to a maintenance hole. The 2 (two) PDC connections located upstream at the top end of the system are to be connected to the mainline sewer with a “Y” and a long radius bend.

Minimum Size and Grade

a) The minimum diameter and grade of a PDC for residential, single family and semidetached lots is 100mm @ 2.0%.
b) The minimum diameter and grade of a PDC for a residential multi-family block is 150mm diameter @2.0%.
c) The minimum diameter and grade of a PDC for a non-residential block is 150mm diameter @ 2.0%.
d) The minimum diameter and grade of a PDC for a commercial block is 150mm diameter @ 2.0%.
e) The minimum diameter and grade of a PDC for an institutional block is 200mm diameter @2.0%.

Connections to Sewers/Maintenance Holes

a) <u>Residential</u>
PDCs 100mm and 150mm in diameter must be connected to the main sewer. Residential sanitary PDCs are not to be constructed into any sanitary maintenance hole.
b) <u>Multi-family, Commercial, Institutional and Industrial</u>
PDCs 200mm in diameter and larger are to be connected to the main sewer at maintenance holes.
c) <u>Connections to Existing Sewers for Lot Infill Situations</u>
    a. In a situation where a lot severance or lot infill condition exists and a new sanitary service will be connected to an existing sanitary mainline, the applicant of the severance/infill, or their agent, must determine if the existing sanitary sewer is at risk of surcharging, or if the sewer is a dedicated sanitary sewer but has a history of surcharging. This information may be obtained from the *Township*. If it is determined that there is a surcharge risk, the *Development* applicant must provide surcharge protection to the *Development* property (s). Any existing clay services are to be replaced.
    b. When connecting PDC’s to existing sewers in a lot infill situation, connections must be made utilizing an approved pre-manufactured tee, in accordance with OPSS 410. Inserta Tees, rubber saddles, etc. are only to be used at the discretion of *Public Works and Engineering Staff*. These products are not preferred in the *Township* and will be granted use in extreme circumstance.

PDC Risers

a) Type I
Required for sewer depths greater than or equal to 4.5 m and for excavations in stable bank conditions. When the PDC is installed between 45° and 67.5°, an approved controlled settlement joint shall be installed at the tee.

b) Type II
Required for sewer depths greater than or equal to 4.5 m and for excavations in unstable bank conditions. When the PDC is installed between 45° and 67.5°, an approved controlled settlement joint shall be installed at the tee.

PDC Cleanouts

Where removal is requested and acceptance is granted by *Township Public Works and Engineering Staff*, the cleanout and tee must be removed entirely. The *Owner* may be required to install a new PDC.

Acceptance will be given on a case-by-case basis and will apply to the entire phase of Capital and *Development* infrastructure projects.

Marking and Recording PDC Service Connections

Green painted surface stakes 40mm X 90mm X 305mm shall be placed at the invert cap of the service to mark the termination of sanitary PDC's. These 305mm or 370mm stakes shall extend above grade 1.2m.

New PDCs to Existing Properties – To be constructed to property line.

6.3 Sewer Material Specifications

The Region of Waterloo and Area Municipal DGSSMS Part C – Material Specifications form the basis of the design criteria except as extended or amended herein. This section's headings have been matched to the section headings of the DGSSMS. The following outlines the supplementary design criteria to be applied to the design of sanitary sewer *Works* for Capital and *Development* infrastructure projects in the *Township*.

Material Specifications

Sewers

Pipe Materials Refer to DGSSMS

On private property, materials for sanitary building sewers and private sewers shall comply with Part 7 of the OBC.

Sanitary sewer pipes shall be comprised of PVC DR 35 (or better) based on the pipe depth, and shall be installed with bell and spigot gasketed joints, as per Local Area Municipal Standards.

C900 PVC pipe (or concrete pressure pipe) will be specified in areas of seasonally high water table and / or where the sewer is greater than 8 metres deep.

In areas where native soil is poor (e.g. silt, clay), embedment materials shall be selected such that native soil migration from the trench walls to the bedding material cannot occur. The migration of native soil into the bedding material could lead to the loss of structural support over the course of time. As such, granular bedding material shall be well-graded and compacted to a minimum of 100% Proctor Density, and filter cloth shall be used and wrapped around the trench. Maximum Groundwater Infiltration allowance shall be 0.075 L/mm diameter per 100 m of sewer pipe per hour, as per OPSS 410.

6.4 Sewer Construction Specifications

The Region of Waterloo and Area Municipal DGSSMS Part D – Construction Specifications form the basis of the design criteria except as extended or amended herein. This section's headings have been matched to the section headings of the DGSSMS. The following outlines the supplementary design criteria to be applied to the design of sanitary sewer *Works* for Capital and *Development* infrastructure projects in the *Township*.

Construction Specifications

Sewers

Refer to DGSSMS and OPSS MUNI

Note: Refer to Sections 1.4 and 2.3.2 of this document for all Minimum Testing Requirements.

6.5 Inflow and Infiltration

The *Township* geographical site characteristics indicates high groundwater table, fluvial channels, flood prone areas and extreme inflow and infiltration currently in the system. Through the numerous Wastewater and Inflow and Infiltration studies completed by the Region of Waterloo and *Township*, long term quality life cycle infrastructure investment is a continued performance recommendation in these documents and Asset Management planning. A complete system that reduces Inflow and Infiltration will continue to provide capacity for future growth within the community.

The *Township* is committed to reducing the impact of extraneous flows within the wastewater collection systems through the proactive introduction of improved design and construction standards and hydraulic performance specifications for new wastewater collection

infrastructure and through the tactical abatement of existing extraneous flow sources via infrastructure rehabilitation and replacement.

6.6 Bulkheads

Sewers under construction shall be bulkheaded, sealed from the existing collection system, as required, in such a manner as to prevent infiltration or flushing water entering existing sanitary sewers during construction and prior to commissioning / acceptance. Installation of bullkheads and their subsequent removal shall be at the *Developer*s / *Subdivider*'s expense.

Approval for the removal of bulkheads from the sanitary sewer post commissioning and testing will not occur without the written consent of the Public Works and Engineering Director.

Extraneous Flow Performance Testing

In the event that bulkheads are removed and home construction is still ongoing, the *Township* will install flow meters at the proposed outlet to the existing sewage collection system at the *Subdivider* / *Developer*'s expense. The inflow and infiltration recorded in m^3 will be billed to the *Subdivider* / *Developer* including administration and engineering costs.

Sanitary sewer flow monitoring shall take place during a minimum eight-month period commencing within 15 days of April 1, in such a manner as to capture any wet weather flows above the dry weather flow, at the following stages of construction:

- Immediately following the removal of bulkhead(s) and / or the issuance of the first building permit, for every catchment connection;
- At 40% - 50% Occupancy; and,
- One year after 85% Occupancy, for every catchment.

Flow monitoring shall continue for at least eight months, until at least five (5) storm events are captured and results reviewed with:

- Average intensity of **5 mm/hr. or greater**, and/or,
- Minimum rainfall depth of **15 mm over a 24-hour period** (with at least one storm event of total volume of 25 mm or greater over a 24-hour period)

Flow monitoring period could be extended at the discretion of *Public Works and Engineering Staff*.

Flow monitors and equipment shall be installed, at a minimum, at the point of connection to the existing system, whenever possible, whereby at least 90% of new *Development* flow is captured. A flow monitoring plan shall be submitted to the *Township* as part of the draft plan and Site Plan approval processes, including:

- Flow monitoring locations

- Type of flow monitoring equipment
- Rain gauge locations

All flow data collected by a *Peer Review Consultant* at the *Subdivider*'s / *Developer*'s cost shall be collected and provided to *Public Works and Engineering Staff* on a minimum bi-weekly basis. Public Works and Engineering *Staff* shall determine and advise if the quality of flow data provided satisfies program requirements.

Approval of servicing performance in accordance with Section 6.9 of this document shall be at the sole discretion of the Director of the *Public Works and Engineering Department* upon completion of the monitoring and inspection program and meeting the performance criteria to the satisfaction of the Director.

6.7 Rainfall Monitoring

Rainfall gauges within 2 km of the flow monitoring locations shall be utilized to log rainfall data at a minimum of 5-minute intervals for the entirety of the flow monitoring period. If there is no existing Regional / GRCA rainfall gauge within 2 km of the site, the *Subdivider* / *Developer* shall install one at their expense.

Rainfall data produced by the local rain gauge, if not a Region / GRCA gauge, shall be vetted against precipitation data records from Environment Canada and/or Regional station.

6.8 Flow Monitoring Performance Analysis and Results

Flow monitoring data at a minimum of 5 minute intervals shall be plotted against rainfall data such that the volume of extraneous flows is computed for each separate storm event, based on the contributing gross drainage area of the catchment. The effective area tributary to the flow monitoring locations will be determined by the *Township* and Region.

Maximum extraneous rainfall derived inflow and infiltration (RDII) flow allowance shall be **0.12 L/s/ha, under a 25 year event** in the newly constructed sanitary sewer system. This shall be considered the Performance Limit. An extraneous flow less than the Performance Limit shall be deemed acceptable by the *Public Works and Engineering Director*.

A variation of this Performance Limit, specified above, can be considered acceptable at the sole discretion of the *Public Works and Engineering Director*. Should it not be deemed acceptable, the *Developer* / *Subdivider* shall repair the problem within a three month period from the confirmation of performance results. The performance of the system will then be reassessed via flow monitoring prior to acceptance of the *Works* by the *Public Works and Engineering Department.*

Maximum groundwater infiltration (GWI) allowance shall be 0.075 L/mm diameter per 100 m of sewer pipe per hour, as per OPSS 410.

6.9 Acceptance of Servicing

Acceptable performance of the servicing will be determined at the sole discretion of the Public Works and Engineering Department through flow monitoring and achievement of performance criteria.

Flow monitoring and subsequent analysis of RDII and GWI flows will be based on methodology accepted and adopted by the *Public Works and Engineering Department* and will be considered in conjunction with water consumption records to determine savings.

Section 7 - Watermain

7.1 Watermain Introduction

The purpose of the Watermain Specifications design criteria is to outline the watermain infrastructure within the Township of Wilmot.

Documents beyond this Infrastructure Standards and Specifications that may be applicable for an engineering design include, but are not limited to, the as amended versions of:

- MOECP Design Guidelines for Drinking Water Systems
- Ontario Provincial Standard Specifications (MUNI)
- Previous studies / Masterplans
- Provincial Acts / legislation
- Region of Waterloo Water and Wastewater Monitoring report
- Canadian Standards Association (CSA)
- American Society for Testing and Materials (ASTM)
- American Water *Works* Association (AWWA)
- Provincial / Regional / *Township* planning documents
- Region of Waterloo Design Guidelines and Supplemental Specifications for Municipal Services (DGSSMS)
- Ontario Building Code
- Region of Waterloo By-laws
- *Township* By-laws

The *Township*'s Infrastructure Standards and Specifications is to be read in conjunction with the Region of Waterloo and Area Municipal Design Guidelines and Supplemental Specifications for Municipal Services (DGSSMS). In the case that this document differs from the DGSSMS, this document will supersede the DGSSMS.

To perform any pre-authorized watermain alterations (addition, modification, replacement or extension), Form 1 – Record of Watermains Authorized as a Future Alteration must be completed. All costs to complete the Form 1 are to be paid in accordance with the Township Fees and Charges Bylaw. Watermain alterations shall be performed in accordance with the conditions of the *Township*'s Drinking Water *Works* Permit and License.

7.2 Watermain Design Criteria

Watermain Design Criteria

The Region of Waterloo and Area Municipal DGSSMS form the basis of the design criteria except as extended or amended herein. This section's headings have been matched to the section headings of the DGSSMS. The following outlines the supplementary design criteria to

be applied to the design of water works for *Capital and Development* infrastructure projects in the *Township*.

External pipe loading shall be calculated and based on a trench width equal to the outside diameter of the pipe, plus 800mm. For purposes of pipe design, the Design *Engineer* shall consider the pipe to be installed in sand or granular “A” bedding, with load factor of 1.9 and/or as per geotechnical/pipe manufacturer recommendations.

In addition to DGSSMS requirements, the design of mains and valves for water connections of 50 mm dia. around a cul-de-sac bulb should be configured to allow for easier flushing in the future. See detail drawing in appendix – WIL-DET-22-14.

In addition to the DGSSMS requirements private hydrants are to be painted red and have reflective rings as per NFPA. Wilmot hydrant colours are red for the bonnet and 2 side caps.

A minimum landscape buffer of 3.0m shall be provided around all municipal fire hydrants unless otherwise accepted by the Township.

Service boxes (curb stops) shall be located at the street property line. Where the water distribution system has been assumed by the *Public Works and Engineering Department*, the *Township* is responsible for water services up to the property line, after which the water service between the property line and the building becomes the responsibility of the property *Owner*.

Service boxes shall be installed at the intersection of the middle of the property frontage.

No water service shall be provided to a premises previously served by a private well until the *Engineer* is satisfied that no cross connection can take place between the private well and the new services, all in accordance with the Public Health Act.

Fire Flow

Please refer to the DGSSMS. The fire flow requirements shall also be determined in accordance with latest edition of “Water Supply for Public Fire Protection” A Guide to Recommended Practice by Fire Underwriters Survey.

7.2 Watermain Construction Specifications

The Region of Waterloo and Area Municipal DGSSMS Part D – Construction Specifications form the basis of the design criteria except as extended or amended herein. This section’s headings have been matched to the section headings of the DGSSMS. The following outlines the supplementary design criteria to be applied to the design of Watermain *Works* for Capital and *Development* infrastructure projects in the *Township*.

Construction Specifications

All watermain installation shall be inspected by a representative of the *Township*, and/or the Consulting *Engineer* herein referred to as the *Inspector*. The work shall be stopped by the *Inspector* but not limited to; if approved drawings are not on site, there is an insufficient quantity of suitable materials on the site, defective material or improper workmanship is being used. Work done in the absence of an *Inspector* may be ordered to be opened up for thorough examination and may be required to be rebuilt or replaced at no expense to the *Township*.

At no time will an *Inspector* be requested to approve the installation of defective material or improper work. No verbal approval by an *Inspector* covering defective material or improper work will be constructed as acceptance. Directives given by an *Inspector* relating to the material and /or workmanship shall be followed by the *Contractor*. *Inspector*s do not have the authority to layout work, stake, line, level or grades. *Inspector*s shall take their own survey shots to confirm grade for quality assurance. The constructor will ensure that the trench is in accordance with the Occupational Health and Safety Act.

If an *Inspector* from the *Township* is required, the *Subdivider* / *Developer* will pay the *Township* for the series of an *Inspector* / equipment at an hourly rate as per the *Fees* and *Charges* bylaw. The hourly rate will be applicable on regular normal working days with the applicable overtime rates to be used outside of *Township* working hours.

If the work on a site is widespread in the opinion of the *Township*, so that more than one *Inspector* is required, the *Engineer* shall provide additional *Inspector*s at the expense of the *Developer* / *Subdivider*.

Provision of an *Inspector* by the *Township* is not to be considered a substitute for supervision by the *Engineer*.

Watermains

Refer to DGSSMS and OPSS MUNI

Layout Plan

Refer to the DGSSMS. The Township of Wilmot requires that service connections for temporary watermains are to be connected to property line / curb stop instead of hose bib, and service area at property line is to be left in a safe condition.

Pressure Testing and Leakage

Refer to Sections 1.4 and 2.3.2 Minimum Testing and Testing.

Watermain Installation

The watermain shall be installed in accordance with AWWA C600 for Ductile Iron (DI) and AWWA C605,OPSS 441 for Polyvinyl Chloride (PVC), CSA, MECP and Manufacture's requirements.

This shall include the joining and placing of the pipe and fittings in the trench to proper line and grade.

When watermain is to be installed, Utility staff to be present during connection to the live system and commissioning of the new system. Utility staff time will be invoiced and or deducted from deposits / *Security* for the project site. Staff, equipment rates and administration as per the Fees and charges bylaw.

Wrapping

Refer to the DGSSMS. In the Township of Wilmot, all sizes of appurtenances including saddles, valves, tees, bends etc. are to be wrapped with an approved petrolatum system consisting of paste, mastic and tape. The *Township* also requires that all curb/main stops and brass fittings are to be wrapped.

The following additional requirements are applicable for watermain construction:

<u>Method of Construction</u>

Pipe shall be laid with the bell or pre-coupled ends facing in the direction of laying, unless directed otherwise by Public Works and Engineering *Staff*. Where pipe is laid on a grade greater than 10%, the laying shall proceed up-grade with the bell end at the higher end of each length of pipe. Pipe restraints may be required and should be installed as per manufacturer and Public Works and Engineering requirements.

Setting of Hydrants

Refer to the DGSSMS. In the *Township*, bags are used to identify hydrants out of service.

Installation

Approved Service Saddles as per the DGSSMS must be used with all PVC mains and as per the following Schedule with Ductile Iron (DI) mains:

S.S.: Indicates where service saddle is to be used.

N.R.: Indicates where service saddle is not required, but may be used.

In the event that water service boxes must be raised beyond the extension height, only screwed couplers will be accepted to install extensions. Extensions utilizing set screws or other means will not be accepted.

Services shall be installed perpendicular to the watermain. Bends shall not be installed without the written approval of *Public Works and Engineering Staff*. Gooseneck bends are to be installed as per CSA and pipe manufacturer requirements.

Number of Services per property

Refer to Township Water Meter Policy in the appendix for details on metering of sites and DGSSMS

Procedure for New Water Service Connection to Existing at Property Line

Refer to DGSSMS

Live Tapping – Refer to DGSSMS

All water connections great or equal to 100mm to be complete with a tapping sleeve and valve.

Watermain Commissioning

Refer to Section 1.4 Minimum Testing Requirements

7.3 General / Emergency Maintenance

When repairs are undertaken by the *Subdivider* / *Developer* / *Contractor* during the warranty period, such repairs shall be made while a Public Works and Engineering licenced water representative / *Inspector* is onsite. The labour, equipment, administration *Fees* shall be paid by the *Subdivider* / *Developer* / *Contractor*.

During the warranty period, where maintenance of water service to the customer or customers is required, or where, in the opinion of *Public Works and Engineering Staff*, a faulty or damaged installation may cause inconvenience or further damage, immediate repairs shall be undertaken by the *Township*.

The *Township* will not be required to notify the *Subdivider* / *Developer* before these repairs are undertaken and the cost of such repairs will be collected from the *Subdivider* / *Developer.*

Section 8 - Stormwater Management Design

8.1 Stormwater Management Introduction

The Township of Wilmot Stormwater Management (SWM) Guidelines documents the primary goals and objectives for stormwater management within the *Township*.

The purpose of the stormwater management guidelines is to outline the design criteria for storm drainage infrastructure within the *Township* and specify the storm drainage criteria for all storm infrastructure design. This storm infrastructure includes, but is not limited to, municipal projects and new *Land Development*, as well as re-*Development* of existing *Lands*. These guidelines also specify the design guidelines for storm drainage design and reporting at various stages of the *Land Development* process, and provide reference and context to applicable Federal, Provincial, Regional and Municipal policies, regulations and best management practices which must be followed when planning, designing and constructing and monitoring storm drainage systems and SWM facilities.

Documents beyond this Infrastructure Standards and Specifications that may be applicable for an engineering design include, but are not limited to, the as amended versions of:

- Region of Waterloo Groundwater Source Protection Plan
- Grand River Source Protection Plan
- Clean Water Act
- Stormwater Management Monitoring Best Management Practice (Federation of Canadian Municipalities)
- Stormwater Management Design Best Management Practice (Federation of Canadian Municipalities)
- Stormwater Management Planning and Design Manual, MECP 2003
- Ontario Ministry of Natural Resources Natural Hazards Technical Guides, 2001
- Erosion and Sediment Control Guideline for Urban Construction, GHHA CA, December 2006
- Low Impact *Development* Stormwater Management Planning and Design Guide, CVC & TRCA, 2010
- Grand River Conservation Authority Stormwater Management Submission Guidelines
- CSA Z800-18: Guideline on Basement Flood Prevention
- CSA W204:19 Flood Resilient Design of New Residential Communities
- Region of Waterloo Sewer Use By-Law
- Ontario Water Resources Act
- MECP Interpretation Bulletin: Ontario Ministry of Environment and Climate Change Expectations Re: Stormwater Management
- Canadian Environmental Protection Act
- Region of Waterloo Risk Management Plan for Source Water Protection
- Ontario Ministry of Natural Resources and Forestry documents
- Alder Creek Watershed Study

- MNRF documents

The *Subdivider*/*Developer* is responsible for obtaining all other necessary permits and approvals from, but is not limited to, the following agencies:

- Grand River Conservation Authority
- Region of Waterloo
- Ontario Ministry of Transportation
- Ontario Ministry of the Environment, Conservation and Parks (MECP)
- Ontario Ministry of Natural Resources
- Federal Department of Fisheries and Oceans
- Environment Canada
- Township of Wilmot
- Transport Canada

The *Township*'s Infrastructure Standards and Specifications is to be read in conjunction with the Region of Waterloo and Area Municipal Design Guidelines and Supplemental Specifications for Municipal Services (DGSSMS). In the case that this document differs from the DGSSMS, this document will supersede the DGSSMS.

8.2 Stormwater Quantity and Quality

The *Township* advocates the requirements of stormwater quality and quantity in order to reduce the additional volume of rainwater that is generated by increased imperviousness and protect the existing environment, private and public property from flooding, degradation and disruption. Stormwater management techniques are usually more effective when applied at the source.

Effective stormwater management practices are continuously evolving and current techniques are part of an expanding toolbox. The following list of available techniques are not exhaustive and there may be additional techniques that emerge through consultation with the industry or due to updates to applicable provincial or federal legislation, best management practices and guidelines. The *Subdivider*/*Developer*/*Consultant* is required to consult with *Public Works and Engineering Staff* throughout the design process, particularly regarding complex sites.

Available techniques for stormwater management can be grouped under the following headings (listed in order of preferred application):

1. Lot Level Techniques and Source Application:
   - Roof leader discharge to surface
   - Roof leader discharge to infiltration facilities
   - Parking lot storage
   - Rooftop storage (roof to be structurally *Engineer*ed to include ponding loads)
   - Permeable pavement
   - Cisterns, Drywells

- Oil/Grit Separators

2. Conveyance
   - Perforated Pipe Systems
   - Enhanced grassed swales / bio retention
   - Oversized pipes
3. End-of-Pipe
   - Oil/Grit Separators
   - Wetlands
   - Hybrid wet pond / wetland
   - Wet ponds
   - Dry ponds
   - Infiltration facilities
   - Filter strips
   - Buffer strips
   - Sand filters

Water Quality Targets

Quality controls shall be in place to protect aquatic habitat in the downstream receiver and reduce the impact of *Development* and urbanization. Water quality treatment will be required for all new subdivision and Site Plan(s) within the *Township*. The *Township* requires that all discharge from new *Development*s meet an **Enhanced** (corresponding to the end–of-pipe storage volumes required for the long-term removal of 80% of suspended solids) water quality standard as outlined in the MECP 2003 SWM guidelines or as updated version. It is also required that a risk assessment, according to Policy RW-CW-19 in the Grand River Source Protection Plan (2019), and as amended versions, be conducted to determine if the *Development* is a threat to drinking water sources, including measures to mitigate the threats.

The following shall be considered general requirements in providing stormwater quality management for the *Township*'s review; however, it should not be considered exhaustive:

- Provide the background hydrologic data for the stormwater quality management control being proposed.
- Indicate the criteria that the quality management control is being developed from, whether it is MECP 2003 guidelines, a Subwatershed Study or other.
- Provide plans/reports of the quality management measure(s) with cross-sections of the facility (or facilities), details of inlets, outlets, maintenance access, berm construction and *lands*caping.
- Provide calculations for stormwater quality control facilities such as, but not limited to, the following:
    - volumetric sizing
    - stage/storage/discharge relationship
    - volume calculations at various facility stages
    - outlet control calculations – drawdown time

  - forebay dispersion length
  - minimum forebay deep zone bottom width
  - length/width ratios
  - maintenance requirements
  - Storage disposal / drying area within SWM block
- The *Consultant* must provide dimensions for all facility attributes and provide verification that the facility meets minimum MECP 2003 guidelines.
- For Industrial sites and Industrial zones *Land*, other high risk sites (gas stations, etc) or an oil/grit separator is proposed, an ECA, as per O. Reg 525/98 and as amended versions, is required for Facility / Site Plan approval.
- The *Consultant* must provide a Landscape Plan for all applicable facilities, which would include background text and comparison to MECP 2003 guidelines and current Best Management Practices.
- The *Consultant* must provide soils information for the facility site and, in the case of proposed infiltration, document the quantity and quality impacts to groundwater recharge.
- The *Consultant* must minimize external drainage area overland flow impacts on the proposed stormwater quality control facility.
- The *Consultant* must indicate proposed flow by-pass conditions and impacts on stormwater quality.
- The *Consultant* must provide a maintenance and operation manual with the detail design of the facility, which outlines requirements for the *Township*.
- The *Consultant* must develop a monitoring program for all applicable stormwater quality control facilities, which not only fulfills Ministry of the Environment requirements, but also the requirements of the *Township*, the Grand River Conservation Authority, the Region of Waterloo and other relevant approval agencies.
- The *Consultant* must address winter operations for the proposed stormwater quality control facility (ref. Stormwater Management Planning and Design Manual, MECP, 2003).
- For Gas Stations / Industrial sites and other high risk sites, a Pollution Protection Plan and/or Risk Management Plan shall be required.

Oil/grit Separators

Areas subject to the collection of contaminants or spills shall be fitted with adequate oil/grit separators. Oil/grit separators are most appropriate for commercial/industrial *Land* use and shall not be used as a standalone Stormwater Management Plan, but rather part of a “treatment train” approach to achieve the required water quality treatment. Oil/grit separators typically serve drainage areas under 2 ha and are predominantly required by the *Township* to be used for spill control. In situations that involve spill management controls, effluent from oil/grit separators is governed by the Region of Waterloo Sewer Use By-Law. Oil/grit separators are also appropriate for providing water quality control for re*Development*, or infill areas which typically have space limitations. The MECP 2003 guidelines shall be followed in incorporating an oil/grit separator as part of the water quality protection for a site. Oil/grit

separator manufacturer's technical guidelines shall be consulted in the sizing, installation, maintenance frequency, warranty etc. of a unit.

Inlet pipes into oil/grit separators shall have a maximum slope of 1% and in accordance with manufacturer specifications.

Additional Post Certification testing may be required by the *Township* for oil/grit separators.

Oil/grit separators are required to be Environmental Technology Verification (ETV) certified units and require ECA approval as per O'Reg 525/98 as amended version.

Water Quantity Targets

The *Township* requires the implementation of proven quantity controls where feasible and following acceptance by the *Township*. In order to meet water balance, post *Development* peak flows must be designed to match pre *Development* flows, the capacity of the receiving system, or an alternate value determined by the *Township*. The *Consultant* shall provide details on how the peak flow is to be controlled. A legal outlet must always be provided for storm drainage. Low Impact *Development* designs proposed will be required to received an ECA approval as per the Ontario Water Resource Act.

8.3 Stormwater Management Securities

In accordance with the *Development Agreement*, the *Township* will require *Security* for the following items for stormwater management monitoring and maintenance:

- 100% cost for Facility clean-out (2x)
- Stormwater Management Monitoring

These items are to ensure that the whole of the monitoring program and facility clean outs are completed, as detailed in the accompanying Stormwater Management Report and Cost Estimate. Should the *Consultant*'s annual reporting not be considered appropriate or compliant, the *Township* may draw from the *Security* and have the monitoring program completed by accredited professionals. The *Security* may also be used by the *Township* to adjust channels and stormwater management facilities to the satisfaction of the *Township*, Grand River Conservation Authority and the Department of Fisheries and Oceans.

8.4 Stormwater Systems Design Criteria

Minor System

The minor system, which incorporates storm sewer pipes, catchbasins, roadway gutters, ditches, culverts, swales, and private storm drain connections for all land uses, shall be designed according, but not limited to the following design principles and criteria but not limited to.

If an existing storm sewer network is proposed to be included as part of the servicing design, a CCTV inspection of the existing system in an acceptable format consistent with *Township* requirements shall be completed to verify the existing system is function as per existing design and in good working condition.

Storm Sewers

All storm sewers must be designed to adequate size and depth in order to accommodate the *Land Development* upstream within the watershed and/or to accommodate the drainage of areas designated by the *Township*. Storm sewers are required on all streets within a subdivision. Sewers must extend at least half way across the frontage or flankage of every lot and block within the subdivision.

Any channel improvements, bridges, culverts and all other drainage structures or improvements shall be designed and constructed in accordance with the Canadian Highway Bridge Design Code and other local standards and specifications and to the acceptance of *Public Works and Engineering Staff*.

Approved Master Drainage Plans (MDP's), *Municipal Drain*age Reports and/or Watershed and Subwatershed Plans, which have established storm sewer sizing criteria other than 1 in 5 year return storm event standard will govern. Please refer to Figure 0-1Minor Storm Sewer Sizing Criteria Decision Tree for more information. In the absence of approved MDP's, storm sewers shall be designed to a minimum 1 in 5 year return storm event. All sewers must be designed to maximum 90% of full pipe capacity. For any storm sewer installed within the *Township* the minimum allowable pipe diameter for the storm mains is 300 mm. Flows entering the receiving existing storm system shall not be increased from pre-*Development* flows and/or existing capacity of the downstream storm sewer.

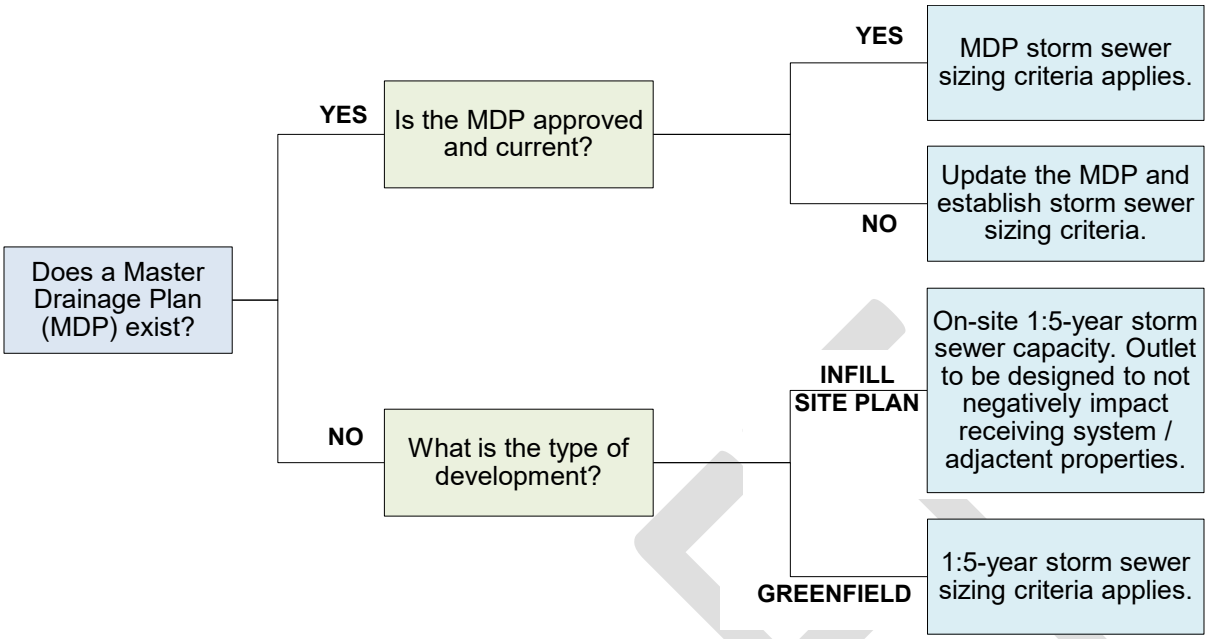

Figure 0-1Minor Storm Sewer Sizing Criteria Decision Tree

All storm sewers, appurtenances, and connections will be guaranteed for a minimum period of two (2) years, and/or 2 winter seasons, after Registration and initial inspection and placed into *Maintenance Period* by the *Public Works and Engineering Department* . However, they will not be released from the *Maintenance Period* until the sewers have been inspected and final acceptance is granted by the *Public Works and Engineering Department*. As recorded information must be provided prior to commencement of the *Maintenance Period*, this includes, but is not limited to, storm connection invert elevations at property line, as-recorded drawings, videos, GIS maps and Public Sector Accounting Board (PSAB) attribute drawings and any other information outlined in the DGSSMS, Subdivision *Agreement* and any other *Public Works and Engineering* requirements.

8.5 Storm Sewer Design Guidelines

The Region of Waterloo and Area Municipal DGSSMS Part B – Design Guidelines form the basis of the design criteria except as extended or amended herein.

Rainfall Intensity

Values of rainfall intensity (I) shall be determined by:

I = A / (Tc + B)C, where

A, B, & C are defined as follows:

i) Refer to the City of Kitchener IDF curves, for parameters and events ranging from 12.5mm to 100 years and with a duration less than 6 hours. When calculating the 12.5mm or 25mm event the storm duration is to be 4 hours.

Time of Concentration and Inlet Time – Refer to DGSSMS

Refer to DGSSMS. Tc (time of concentration) and inlet time shall conform to the latest MECP guidelines.

Runoff Coefficient by Land Use

The minimum runoff coefficients (R) for storm drainage (unless otherwise specified in watershed plans) are as follows:

Parks – Over 4.0 ha	0.30
Parks – 4.0 ha and under	0.35
Single Family Residential:	
Lots greater than 15m frontage	0.65
Lots 12-15m frontage	0.70
Lots smaller than 12m frontage	0.80
Semi-detached	0.80
Townhouse	0.85
Apartments	0.85
Schools and Churches	0.90
Heavily Developed Areas	0.95

Impervious values for overall storm analysis and modelling of new *Development* shall reflect maximum impervious coverage through Zoning By-Law regulations and or the requirements above whichever is more stringent.

Pipe Slope

Refer to DGSSMS for the first reach of permanent dead end sewer. All other slopes shall be determined as a function of the flow velocity (described below) for each specific run.

Blind Connections

Refer to DGSSMS. Maintenance holes are required on the road for all rear yard catchbasins.

Head Walls

Refer to DGSSMS. A pedestrian guardrail as per OPSD 980.101 shall be installed on headwalls.

Structure

Refer to DGSSMS. All catchbasin maintenance holes and maintenance hole structures are to be installed with 600mm sumps with the exception of rear yard catchbasins.

Tee Maintenance Holes

Refer to DGSSMS and use OPSD 707.010.

Drop Inlet Structures

The *Public Works and Engineering Department* only permits external drop structures. Drop structures shall be provided in accordance with MECP Design Guidelines and OPSD 1003.01 (external). Note: MECP requirement applies for a difference of 0.61 m.

Catchbasins

Refer to DGSSMS and all catchbasins are to be designed to accommodate design accumulated storm runoff, including catchbasin leads etc. Catchbasins shall not be placed in front of driveway entrances and pedestrian walkways.

Minimum Diameter

Refer to DGSSMS. Storm sewer services shall be provided for each property requiring a sump pump in residential *Development*.

Open Ditch and Culvert Design

The minimum allowable culvert size shall be 450 mm in diameter.

8.6 Storm Sewer Material Specifications

The Region of Waterloo and Area Municipal DGSSMS Part C – Material Specifications form the basis of the design criteria except as extended or amended herein. This section's headings have been matched to the section headings of the DGSSMS. The following outlines the supplementary design criteria to be applied to the design of storm sewer *Works* for *Development* in the *Township*.

Material Specifications

Pipe Materials

Refer to the DGSSMS for acceptable materials. PVC profile pipe is not permitted for *Township* infrastructure. CSP may be used for driveway culverts, 12gauge 2.8mm shall be used. Only HDPE pipe shall be used for road crossings.

Flexible Couplings – Refer to DGSSMS

Township does not allow flexible couplings on stormwater infrastructure for new Capital and *Development project*s. PVC hard sleeve and gasketed pipe connectors are required and must be a hand buried connection.

Watertight Connectors – Refer to DGSSMS

8.7 Sewer Construction Specifications

The Region of Waterloo and Area Municipal DGSSMS Part D – Construction Specifications form the basis of the design criteria except as extended or amended herein. This section's headings have been matched to the section headings of the DGSSMS. The following outlines the supplementary design criteria to be applied to the design of storm sewer *Works* for Capital *Development* projects in the *Township*.

Construction Specifications

General

Refer to DGSSMS.

Inspection and Testing

Refer to Sections 1.4 and 2.3 for all Inspection and Testing Requirements.

Inlet Systems – Catchbasins

The minor system shall be designed so that the conveyance capacity complements the inlet capacity. *Subdivider*/*Developer's Consultant* must ensure that all storm sewers and catchbasin leads are sized adequately and calculations provided to the *Township*.

Outlet Treatment

All storm sewer outfalls shall be designed to prevent erosion. Where discharging to a watercourse it should blend into the natural surroundings, in an environmentally acceptable and aesthetically pleasing manner, given the size and location.

An access road with a minimum width of 4.0 m and cross fall of 2% shall be provided to all outfalls.

Outfalls shall be provided with safeguards to prevent entry by unauthorized personnel / animals into the outfall. Refer to As-Amended version of OPSD 804.050 Grating for Concrete Endwall to determine what outfall sizes require grating to prevent unauthorized entry.

Outlets shall not be fitted with orifice plates as flow control. Smaller diameter pipes shall be used instead.

The invert of the outlet shall be located 450mm (freeboard) above the receiving watercourse five (5) year flood elevation (or where not available, the approved otherwise high water level), and the invert of the overflow weir shall be 450mm (freeboard) above the 100 year storm event or regional storm event (whichever is greater) of the receiving watercourse. The highest design storm water elevation within the pond shall be below the underside of footing elevations of the surrounding buildings. The outfall shall be adequately protected from erosive forces in the receiving watercourse to prevent scouring and undermining. The design shall consider the limits of any tail water effects and ensure that the invert of the outlet is above such limits.

The outlet should be positioned no greater than 45 degrees in order to minimize the outlet angle to normal creek flow and the outlet should be located flush with the creek bank for minor creeks with no valley flow and at the intersection of the overbank area/valley wall for major creeks. Reference Section 9 “Erosion and Sediment Control” of these Guidelines and the Erosion and Sediment Control Guidelines published by the Grand River Conservation Authority and the Greater Golden Horseshoe Area Conservation Authorities (“Erosion & Sediment Control Guide for Urban Construction, 2006”) as amended.

Storm sewer outfalls to regulated watercourses require a permit from the Grand River Conservation Authority. Storm sewer outfall design is to be submitted to the *Township* as part of the full engineering submission.

Prior to Draft Plan Approval the *Subdivider*/*Developer*/*Consultant*s must demonstrate that the storm drainage is directed to a legal outlet and that *Easement*s, blocks or other *Agreement*s have been obtained if appropriate.

Additional Post Certification testing may be required by the *Public Works and Engineering Department* for SWM outlets.

8.8 Major System Roadway Conveyance

Major roadways and local streets often convey runoff during severe storm events and, as such, shall be incorporated as elements of the major drainage system. Major overland flow must be confined to public roadways and legal outlets and not through residential lots.

For new *Development*, public road grades must be designed/constructed to provide positive conveyance to major watercourses, storm sewer inlets and/or SWM Facilities.

The public roadway major system interface between existing and proposed *Development* must be positively graded to convey roadway overland drainage to the flow capacity of the existing roadway system while maintaining public roadway flooding depths, velocities, outlet capacity etc. to the foregoing standards. Should overland flows from the proposed *Development* be above the existing receiving overland flow system, storage of overland flow or other methods

of reducing flows to the receiver flow capacity will be required. Should a positively graded major system interface not be possible under normal site grading conditions, as demonstrated by the *Subdivider*/*Developer*, then alternative grading and/or methods of conveying the overland flow such as, but not limited to, sag roadways (saw tooth grading), overland relief points and enlarged storm sewers, shall be reviewed with the *Public Works and Engineering Staff*. Street flooding depths, velocities, etc. must be maintained at/or below *Township, MNRF, GRCA* standards.

8.9 Overland Flow Routes

All overland flow from rear yards must be conveyed to roadways and/or legal outlets via swales or rear yard catch basins with connecting leads. The use of rear yard catch basins should be actively discouraged. The overland flow routes, through and from lots, must be designed such that water levels remain below the finished yard grade adjacent to the swale. All overland flow routes must be designed to convey the 100 year and regional storm event within the confines of the overland flow route and must maintain flow velocities below the erosion threshold for the swale (refer to Section 9 for erosion control details). The detailed design must show how the overland flow route will convey the flows within the subdivision and all contributing upstream areas. Overland flow routes are to be identified during the preliminary stormwater management design.

8.10 Flood Management

All proposed new *Development* or re*Development* areas must assess the potential impacts on local and regional flooding, and mitigate accordingly. The depth and extent of street flooding in new *Development*s is limited to 0.15 m above the centerline elevation of the roadway stay within the Right of Way, velocity must not exceed 1.5 m/s in order to protect property and public safety, and allow emergency vehicle access. The design must be in accordance with but not limited to GRCA, MNRF and CSA W204 standards. The design should also assess flood risk as per current Ministry of Natural Resources and Forestry's (MNRF) practices for flood risk mapping (refer to MNRF Technical Guide – River and Stream Systems: Flooding Hazard Limit) and should be evaluated as "low risk".

In areas where no watershed plan has been completed and in certain site specific circumstances, the *Township* will require that post-*Development* runoff peak flows are controlled to pre-*Development* levels or less depending on the existing outlet size/capacity. As such, discussion regarding the over-control of post-*Development* flows would be required with the Public Works and Engineering Staff. Examples of *Development* post-construction leading to an increase in flows include, the addition of concrete pads, outdoor paved areas, accessory buildings, decks etc. The *Consultant* shall provide a table with pervious vs impervious area of the proposed *Development*.

Where Subwatershed or Master Drainage Plans have been completed, the *Consultant* will be required to comply with the recommendations of the specific plan. Any variations will need to

be appropriately supported by detailed analysis and also be approved by any agencies having jurisdiction.

Sizing flood management controls (i.e. stormwater management quantity control facilities) is typically an iterative procedure. Details for the expectations for modelling flood management are discussed in more detail below.

8.11 Analytical Methods for Stormwater Design

Analytical methods can be subdivided into two categories, hydrology and hydraulics, representing the establishment of flows and flow levels, respectively. Hydrology typically precedes the determination of hydraulics for all new *Development* and re*Development*, as flows are required to establish the hydraulic characteristics of open and closed systems. The analytic methods describe below represent established techniques that are accepted by the *Township*. The *Consultant* is not limited to the methods herein, although discussion with the *Township* and review agencies would be required to confirm the appropriateness of using alternative hydrologic and hydraulic analytical techniques, prior to their use.

Hydrology

Rainfall

Intensity – Duration – Frequency (IDF)

The most recent City of Kitchener IDF Curves Hydrographs for the design storm events shall be used to design storm infrastructure.

Rational Method

The *Public Works and Engineering Department* will not accept the Rational Method for determinating time/stage and required storage volumes of SWM facilities. The Rational Method is a conservative approach calculation with many *assumptions* built in. The Rational Method provides the designer with a peak discharge value, but does not provide a time series of flow or flow volume. The *Consultant* must ensure the specific flow restrictions proposed on the site work with the entire modelling system.

Event Based Hydrologic Models

Single Event Modeling

The Flood Plain Management in Ontario Technical Guidelines, Ontario Ministry of Natural Resources, 2001 and the Drainage Management Manual Parts 3 and 4, Ministry of Transportation, 1997 as amended provide general guidelines on the selection of hydrologic models. The Ministry of Transportation document lists the characteristics of each model, from

which the *Consultant* can evaluate the appropriateness of certain event based hydrologic models.

A list of event based hydrologic models considered appropriate has been provided below. Should a *Consultant* wish to use another model, documentation as to the validity of the model should be provided to *Public Works and Engineering* Staff for review prior to use.

List of Approved Hydrologic Models

1. SWMHYMO/OTTHYMO
2. VISUAL OTTHYMO
3. SWMM
4. XP-SWMM
5. MIKE SWMM
6. MOUSE (DHI)
7. HSPF/WINHSPF
8. GAWSER
9. MIDUSS

List of Approved Hydraulic Models

1. XP-SWMM
2. SWMM
3. MOUSE (DHI)
4. HEC-RAS (If HEC-2 is used, it should be converted to HEC-RAS)
5. Flow Master
6. Culvert Master

Sound hydrologic modelling standards of practice shall be followed in developing an event based hydrologic model. The following standards of practice are intended to guide general model preparation for most hydrologic programs and techniques, however, this list should not be considered exhaustive:

- The modeller must provide the purpose for developing the hydrologic model, such as determining flow rates, runoff volumes, flow routing effects for proposed *Development*, existing *Land* use conditions etc.
- The modeller must provide the study objectives and how they relate to the hydrologic modelling.
- The modeller will provide the model selection criteria and how the model matches the criteria.
- The modeller shall provide the basis for the storm design information, outlining how the design storm has been selected.
- The modeller shall provide drainage area plans outlining both internal and external catchments, modelling schematics and tables providing drainage area parameters.
- Background information on the selection of the drainage area parameters must be provided to assist the *Public Works and Engineering Department* in understanding on the *assumption*s leading to the drainage area parameters.
- Background data on overland and minor storm systems shall be provided with plans clearly presenting and labelling both systems.
- Data to be provided on routing through natural and manmade storage systems, with detailed plans and calculations outlining how the stage/discharge relationship has been developed.
- Sensitivity analysis must be conducted on a minimum number of parameters which varies with model complexity.
- Verification or validation of results must be provided through various methods such as calibration to recorded streamflow, unit flow rates and runoff volume comparisons using the techniques such as the MTO index method or equivalent. The application of the validation technique (number and type) will depend on the availability of data and the sensitivity of the analysis.
- The modeller must provide all input and output details in a logical manner, with an explanation for potential errors.

Continuous Event Modelling

Continuous models differ from event based hydrologic models in that rather than using a synthetic design storm based on IDF data, a long term time series of historical meteorological data is used for the input driving function. In addition to historical rainfall data, continuous models typically require seasonal state variables. Continuous models are usually more complex than event based hydrologic models, as typically the models consider more processes including temperature, evapotranspiration, snow conditions and groundwater. Notwithstanding, the modelling standards of practice for event based hydrologic models also apply to continuous models. Continuous models are typically used but are not limited to higher level studies such as watershed and subwatershed studies. Continuous modelling may also be used for studies with a scope requiring historical data inclusion.

In addition to the standards of practice for event based hydrologic models, the *Consultant* shall demonstrate that the historical meteorological time series selected has been obtained from the

nearest rainfall gauge to the *Consultant*'s study area. This will often lead to a trade-off between duration of record and proximity. Typically, the minimum duration for meaningful continuous simulation is 20 to 25 years. Historical rainfall data is available from Grand River Conservation Authority, the Region of Waterloo, and Environment Canada.

The *Consultant* in selecting a continuous hydrologic model usually intends to develop frequency flows for the historical data period. The *Consultant* should specify the *assumption*s and methodology for determining the frequency flows and typical year hydrographs. The *Consultant* should provide validation of the selected probability distribution by using statistical tests.

The *Consultant* shall select the continuous model giving consideration to *Development* and / or re*Development* characteristics to the satisfaction of the *Public Works and Engineering Staff*. In addition, approval agencies (i.e. Grand River Conservation Authority, MNR, MTO, Region of Waterloo and other applicable agencies) other than the *Township* must be consulted to determine modelling requirements.

Hydraulic Capacity

Drainage systems can be subdivided into both closed and open systems. The hydraulic capacity of the receiving minor and major storm system is to be determined to verify that drainage can be safely conveyed as proposed. For each system various analytical techniques can be employed. The *Consultant* is not limited to the methods herein, although discussion with the *Public Works and Engineering Staff* and review agencies (Conservation Authorities, Ministry of Natural Resources, Ministry of Transportation, Region of Waterloo and others) would be required to confirm the appropriateness of using alternative hydraulic analytical techniques.

The hydraulic capacity of a storm system can be determined through hydraulic modelling and for certain applications through the use of standard 'hand calculations'. As for hydraulic modelling, standards of practice relate to the use of various techniques. The following minimum standards of practice are intended to provide guidance:

- The *Consultant* shall clearly identify the study objectives and how they relate to the hydraulic modelling.
- The *Consultant* must provide the purpose for the hydraulic modelling.
- The modeller must provide the model selection criteria and how the model matches the criteria.
- The *Consultant* must provide plans clearly presenting the closed and/or open hydraulic system.
- For plans describing open systems, the *Consultant* must note cross-sections, study limits, *Land* use, crossing details, spill areas, ineffective flow areas, and flooding limits and elevations for the appropriate design event(s).

- For plans describing closed systems such as storm sewers, the *Consultant* must note the storm sewer network details including maintenance hole numbers, storm sewer size, length, study limits, *Land* use, slope, and sewer and ground elevations.
- For combined hydrologic/hydraulic models such as SWMM, the *Consultant* must provide plans that not only describe the closed system but also the contributing drainage areas and overland flow system.
- For all hydraulic models, the *Consultant* must provide the downstream and, if applicable, the upstream boundary conditions for each storm modeled and the *assumption*s used to define the boundary conditions.
- For all hydraulic models, the *Consultant* will document the parameters established for hydraulic losses such as Manning's 'n', inlet and outlet losses and other appropriate losses.
- The *Consultant* must summarize the selection of procedures for determining the computed energy grade line and water surface elevations.
- The *Consultant* must document the hydraulic results in summary form for the relevant storm events.
- The *Consultant* must prepare the model of an open system such that it fully contains the modeled flows without exceeding the hydraulic cross-section. Should it not be possible to contain the flows within the defined geometry of the open storm system, the *Consultant* should provide details on the spill characteristics. In the event of a spill, a rationale should be provided on whether or not to include a flow loss in the calculation.
- The *Consultant* must document potential impacts on existing infrastructure and possible mitigation measures.
- Sensitivity analysis shall be conducted on a limited number of parameters depending on the model type and complexity.
- The *Consultant* must verify hydraulic results for an existing closed/open storm system by documenting historical flood elevations (i.e. Hurricane Hazel) for specific storm events and comparing the hydraulic modelling results to the historical data; calibration of losses should be included, if sufficient data exists.
- The *Consultant* must provide the input and output data in a logical manner with an explanation of the potential error.

The hydraulic capacity of storm sewers is to be determined using the Region of Waterloo and Area Municipal Design Guidelines and Supplemental Specifications for Municipal Services (DGSSMS) storm sewer design sheet and the MECP design guidelines. In addition, the *Consultant* must document, in both plans and text, the hydrology for the storm sewer design. The storm sewer design must be conducted using the City of Kitchener's 5 year IDF storm data of the *Township*'s approved storm event for the study area (regardless of the return period used previously to size downstream storm sewers). A minimum 10% contingency shall be added to calculations.

Flood Management Sizing

The following are requirements for sizing flood management controls. The *Consultant* must develop a stage/storage/discharge curve for a stormwater management control facility / inlet control device by determining the required runoff volume to be detained for various storm events.

The procedure for runoff determination typically requires the modeller to use either an event based or a continuous hydrologic model. The modeller should determine which modelling methodology to use. The first step in methodology selection should be whether or not a Subwatershed, Master Drainage Plan or similar previous study has been completed and the type of modelling used. If no previous study has established the modelling requirements, the following must be considered in selection of a methodology:

- The sensitivity of the watercourse from fisheries and erosion perspectives;
- The availability of stream flow data;
- The potential for stormwater management long-term monitoring, and
- Approval agency and *Township* requirements

In providing the *Township* details on flood management, the *Consultant* must follow standard codes of practice. The following standards are intended as a guide of requirements; however, this list should not be considered exhaustive:

- The *Consultant* shall provide the background hydrology behind the pre-*Development*, post-*Development* and controlled post-*Development* scenarios
- The *Consultant* shall provide a table on the stage/storage/discharge relationship of the flood control facility. Methodology of determining the relationship shall be provided;
- The *Consultant* shall provide cross-sections of the facility and details of the inlet(s) and outlet(s);
- The facility shall have an overflow weir which is typically required for flows greater than the controlled storm events;
- The facility shall have a maintenance access for both the inlet(s) and outlet(s), and
- The *Consultant* shall provide *Lands*caping details (to be approved by GRCA).

8.12 Watercourse Systems

Sites located in close proximity to watercourses present unique challenges for stormwater management. In the course of a *Development*, there may be a need to discharge to or alter/remediate an existing watercourse or design a new watercourse/channel. Consultation with the Grand River Conservation Authority is required.

Discharge to Existing Watercourse

If a *Development* is to discharge directly to a watercourse, the reduction of pollutant loads is essential before stormwater is discharged to these features in order to preserve or enhance the ecological habitat.

For sites that discharge via private or municipal conveyance systems to a watercourse that is within 1,000m of the site: The proponent will ensure the site achieves complete water quality control of runoff that is generated from all surfaces on the entire site by achieving **Enhanced** protection.

Watercourse Alterations (In Relation to Stormwater Outlets)

Where watercourse alterations are proposed as part of the *Development*, the design of such alterations shall consider and incorporate the following as a minimum:

Channel design is to be based on natural channel forming processes to achieve a dynamically stable system. The channel evaluation methodology and design approach is to be consistent with the most current Provincial guidelines (ref. Ontario Ministry of Natural Resources Natural Hazards Technical Guides, March 2003 and “Adaptive Management of Stream Corridors in Ontario”, MNR, 2001) and CSA W204.

Alteration to a regulated watercourse will require a permit from the Grand River Conservation Authority (*Development*, Interference with Wetlands and Alterations to Shorelines and Watercourses) and potentially clearance/authorization from the Federal Department of Fisheries and Oceans (Fisheries Act) and Ontario Ministry of Natural Resources (Lakes and Rivers Improvement Act).

Remedial *Works* shall incorporate fish habitat protection/mitigation or compensation in accordance with the requirements of the Federal Department of Fisheries and Oceans (DFO) and Ontario Ministry of Natural Resources (MNR), related to stream type and significance.

Remedial *Works* shall incorporate as a minimum, the requirements of the governing Official Plan (Region of Waterloo and/or Township of Wilmot), as well as the requirements of provincial Ministries and other public agencies for the protection of natural heritage features and ecological functions such as:

- Township of Wilmot
- Regional Municipality of Waterloo
- The Grand River Conservation Authority
- Ontario Ministry of Natural Resources
- Transport Canada for Navigable Waters Permit
- Fisheries and Oceans Canada, and
- Ontario Ministry of Tourism, Culture and Recreation.

Watercourse/Channel Design Requirements

Watercourse/Channel Design should be applied and/or considered under the following circumstances at a minimum:

- Channel realignment
- Watercourse erosion/stabilization *Works*, and
- New creek corridors

Watercourse/channel design involves numerous disciplines such as qualified geomorphologists, water resources *Engineer*s, terrestrial specialists and fisheries biologists to interpret existing watercourse / channel conditions and to develop, through an integrated design approach, a 'successful' channel design. The watercourse / channel design has to incorporate hydrology, stream hydraulics, fluvial morphology and fisheries habitat assessment. Each discipline has to determine design parameters which will be beneficial in the integrated design approach. Design approaches must consider the following characteristics as a guideline (not exhaustive) to developing a watercourse/channel design:

Physical (Watershed and Watercourse/Channel) Characteristics

- Run-off characteristics
- Flow regimes
- Channel geometry
- Floodplains
- Alignment and meandering
- Bed-forms, riffles and pools
- Slopes
- Soils
- Erosions and tractive forces
- Shading
- Channel roughness, and
- Light penetration.

Chemical Characteristics

- Sediment load
- Suspended sediment
- pH
- Hardness
- Temperature
- Dissolved oxygen
- Nutrient levels, and
- Toxic Substances

Biological Characteristics

- Fisheries and fish habitat (including habitat potential)
- Presence of plants and macroscopic animal life
- Other terrestrial, riparian characteristics, and
- Stream bank cover.

There are numerous guidelines which consider the foregoing characterization in developing a natural channel design, such as the following examples:

- 1994 MNR Natural Channel Design Manual
- Dr Dave Rosgen, Applied River Morphology, 1994
- Dr William Annable, Morphologic Relationships of Rural Watercourses in Southern Ontario and Selected Field Methods in Fluvial Geomorphology, August 1996
- Dr Robert Newbury, Canadian Stream Reference Book (Ongoing)
- 2001 MNR and
- Adaptive Management of Stream Corridors in Ontario, Natural Hazards Technical Guidelines, MNR 2003

The *Consultant*s should demonstrate that due care has been taken in establishing the watercourse/channel design to the satisfaction of the *Public Works and Engineering Department* and relevant approval agencies (DFO, GRCA etc.).

Design Documentation for Watercourse/Channel Design

The following is considered a minimum for documentation of watercourse/channel design and is not intended to be exhaustive:

- The *Consultant* must provide the background existing, proposed hydrologic data and pre-*Development* monitoring data.
- The *Consultant* must provide plans outlining the following:
    - Existing and proposed plan and profile
    - Existing and proposed channel sections
    - Details for proposed typical channel sections
    - Sediment and erosion controls
    - Staging plans
    - Seeding and *Lands*caping plans
    - Floodline delineation – existing and proposed.
    - Trails and maintenance access routes
- The *Consultant* must document how the proposed watercourse/channel design matches and/or enhances existing watercourse/channel characteristics.
- The *Consultant* must document how the proposed watercourse/channel will function within the watercourse block/valley system.
- The *Consultant* must document existing and proposed watercourse/channel hydraulics, including storage discharge relationships.

- The *Consultant* must document potential impacts on both the existing terrestrial and fisheries conditions.
- The *Consultant* must provide a monitoring program outlining monitoring requirements for the various design principles.

In addition to the watercourse/channel design, the following shall be incorporated:

- Access will be required consisting of a 4.0m wide pathway with cross fall not to exceed 4%.
- Special consideration must be given to the vegetation. Landscape Plan must be designed by a member of OALA in good standing
- Area must be posted as naturalized area and wording within the purchase and sales *Agreement* should reflect this requirement
- No access gates permitted directly from private properties.

Roadway Crossings

Waterway openings for culverts and bridge crossings shall be designed in accordance with the Ministry of Transportation Ontario (MTO) policies and guidelines and CSA W204.

Arterial and collector roadways in new *Development*s shall be, where possible, the only road classifications permitted to cross a watercourse having a drainage area in excess of 125 ha. Road design must have overflow that does not impact private property. Spacing and location of roadway crossings other than arterial or collector roads may be considered by the *Township* when documented within the Stormwater Management Plan. Freeboard and clearance (as defined in the governing MTO manuals and the Ontario Bridge Code) requirements for watercourse crossings shall be based on current MTO criteria.

Culvert replacements may require a Class Environmental Assessment as outlined within the MEA Municipal Class Environmental Assessment document, October 2000, as amended in 2020 as amended.

Setbacks

The size of setbacks from the watercourse edge to developable *Lands* is typically a function of the significance of the valley form, the sensitivity of the watercourse and the type of *Development* (building or other).

The Grand River Conservation Authority requires that setbacks from watercourse shorelines, and/or wetlands be established through watershed; subwatershed studies (Comprehensive EIS), scoped EIS or through a full EIS. The Grand River Conservation Authority may establish setbacks using “Technical Guide, River and Stream Systems: Erosion Hazard Limit OMNR 2002” to define the erosion hazard limit using stable slope allowances. *Consultant*s should be aware that watercourse setbacks will typically be established by the Conservation Authority using the greater of the fisheries, valley and floodplain setbacks. Further guidance on

establishing setbacks is provided within the Grand River Conservation Authority policies relating to Ontario Regulation 150/06.

Watercourse Access/Maintenance

Prior to Draft Plan Approval the *Subdivider*/*Developer*/*Consultant*s must demonstrate that the storm drainage is directed to a legal outlet and that *Easement*s have been obtained if appropriate.

Land dedication for watercourses adjacent to private *Land* in new *Development*s may require fencing and/or demarcation posts to prevent human access and encroachment. The need for the fencing or demarcation requirements shall be assessed on a *Development*-by-*Development* basis based on the Environmental Impact Study or the General Vegetation Overview recommendations. Should fencing be required, it shall be on public property, 150 mm from the property line. Private access gates to creek block areas are not allowed.

Natural channel design shall consider channel maintenance requirements by incorporating access routes. Access routes may be located within the appropriate top of bank setback limit (with a 450mm freeboard elevation) or adjacent to the low flow area in appropriately designated areas.

8.13 Stormwater Management Erosion Control/Geomorphology

Depending on the downstream receiver and the nature of the soil strata, aquatic and flora species, stream banks can be subject to increased erosion. In these cases, the *Consultant*(s) will be required to provide appropriate protection in accordance with the appropriate Watershed, Subwatershed or Master Drainage Plan, Stormwater Management Planning and Design Manual, Ministry of the Environment, 2003 and current Best Management Practices available.

In areas where no Subwatershed Plan exists, it shall be the responsibility of the *Consultant* to provide adequate erosion protection in accordance with the Grand River Conservation Authority, Provincial and Federal Regulations and Guidelines and *Public Works and Engineering Staff*.

Erosion control and management involves, but is not limited to, one of the following:

- Extended Detention storage for the “Simplified or Detailed Design Approach” or the 25mm storm event as outlined in the Provincial Guidelines (ref. Stormwater Management Planning and Design Manual, Ministry of the Environment, 2003)
- Assessment of downstream erosion susceptibility and critical flow values in conjunction with event modelling.
- Assessment of downstream erosion critical velocity or shear forces in conjunction with continuous simulation techniques (duration analysis)
- Also refer to the Erosioin Control section

In areas where the downstream receiving watercourse is determined to be unstable, or where control/over control of flow rates is ineffective or not feasible, design of channel alterations may be considered, subject to design in accordance with natural channel design principles (ref. Ontario Ministry of Natural Resources Natural Hazards Technical Guidelines, March 2006).

Storm sewer outfalls in watercourses shall be provided with proper protection against erosion which includes appropriate bank scouring protection on either side of the outfall and watercourse. When storm sewer outfalls outlet to steep and/or deep valleys, drop structures shall be designed in such a manner as to provide integral bank stability. Such local erosion protection measures shall be designed so as not to interfere with the watercourse forming processes of the receiving watercourse system or the system's ecological features or functions.

As a minimum, the *Consultant* must provide the following erosion control documentation:

- The *Consultant* shall provide the rationale and background information for the methodology used in assessing the required erosion controls.
- The *Consultant* shall provide downstream erosion threshold parameters based upon field investigation and background information.
- The *Consultant* shall demonstrate how the erosion controls have adequately addressed downstream erosion conditions.
- The *Consultant* shall, in the case of an erosion control stormwater management facility, provide:
    - Stage/storage/discharge details and calculations;
    - Outlet control details
    - Facility plan and cross-sections, and
    - Watercourse configuration at outlet
- The *Consultant* shall document any proposed mitigation measures and provide the calculations performed in determining the measures.

8.14 Stormwater Management Facilities in Development and ReDevelopment

Stormwater Management (SWM) facilities are to be centralized to provide a more cost effective approach through lower capital costs and long term maintenance costs, however site grades must be considered in the approach. New subdivisions must consider upstream developable lands, future road widening, Zoning By-laws, future roads and future owner use of the properties, with coordinated efforts between all affected *Land Owner*s. SWM facilities and related sewers must be designed to accommodate post-*Development* flows from the surrounding undeveloped *Lands* within the overall catchment area. After 95% build out of a *Subdivider*/*Developer*'s Plan of Subdivision is achieved, surface asphalt has been completed, and all SWM conditions (i.e. clean-out monitoring, revegetation, as recorded surveys, etc.) have been met, as well as the 2 year *Maintenance Period*, the *Subdivider*/*Developer* can be released from the maintenance responsibilities of such facility.

If a new Subdivision will outlet to an existing downstream SWM facility, the *Subdivider*/*Developer* must be responsible for the maintenance, cleanout, performance (quality and quantity), and plantings (including aquatic plantings) of such facility until 95% of the *Subdivider*/*Developer*'s Plan of Subdivision is built out and all SWM conditions including monitoring have been met.

A 1.8m high black vinyl coated chain link fence is to be installed between all stormwater management facilities and residential, commercial or industrial *Development*.

In recognition of diverse *Development* conditions, the *Public Works and Engineering Department* will consider all innovative approaches and/or techniques that can be demonstrated to meet its storm water management objectives. It is encouraged that *Consultant*s use best management practices and provide innovative approaches to unique *Development* conditions. Oil grit separators will not be a substitute for stormwater management facilities.

Stormwater management areas for subdivisions must be on *Lands* conveyed at no cost to the *Township* in addition to any *Lands* required to be dedicated for park purposes. Construction costs will be borne by the *Owner* while long term maintenance of the storm water management facility will be borne by the *Township* once final acceptance certificate is issued. Stormwater management areas, subject to Site Plan approval, will be on *Lands* retained by the property *Owner*. All costs associated with the construction and continuing maintenance of stormwater management facilities shall be borne by the property *Owner*. After construction of site plan developments the SWMF and any oil grit separator shall be cleaned out.

Slope

A maximum 5:1 slope shall extend from the bottom of the pond to the limit of maximum extended detention, with a minimum horizontal length of 3.0m. The minimum allowable gradient on the bottom of the basin shall be 1.0% and the maximum gradient shall be 5.0%. From the point of maximum extended detention, to the lower limits of the “safety separation” area or property line where it abuts private property, slopes shall vary between 3.5:1 to 6:1 and have a maximum average slope of 4:1, not including the maximum 10:1 maintenance access slope. Designed pedestrian access areas shall not exceed a maximum slope as per AODA requirements.

Dry Ponds

Stormwater management Dry Ponds shall be designed to limit the maximum depth of water to 1.8m above the lowest point of the stormwater basin. An additional 0.45m freeboard is required above the maximum peak flow flood level. The maximum depth of the extended detention zone shall not exceed 1.0m above the lowest point of the pond. The Dry Pond design must adhere to the MECP 2003 guidelines. All slopes 5:1 and steeper ranging from a minimum horizontal distance of 3.0m from the pond bottom level to the property line (not including walkways and trails) shall also be planted.

Wet Ponds

Stormwater management Wet Ponds require a minimum 5 ha drainage area to function effectively. Subwatershed plans will provide the required guidelines for the Stormwater Management Practices in conjunction with the MECP 2003 guidelines, but should a subwatershed plan not exist, the MECP 2003 guidelines and current best practices shall be followed. Stormwater management Wet Ponds shall be designed to limit the maximum depth of water to 3.3m above the lowest point of the stormwater basin. An additional 0.45m freeboard is required above the maximum peak flow flood level. The maximum depth of the extended detention zone shall not exceed 1.0m above the permanent pool elevation. Maximum peak flow attenuation zone shall not exceed 1.8m above the permanent pool elevation. The permanent pool depth shall range between a minimum depth of 1.0m to a maximum depth of 1.5m.

A maximum 5:1 slope below the permanent pool level is permitted around the entire stormwater management pond. The horizontal distance of this slope must be a minimum of 3.0m. A slope commencing from this point to the lowest point of the stormwater basin shall be a maximum of 3:1. A maximum 5:1 slope above the permanent pool level shall be permitted around the entire stormwater management pond. The slope shall extend from the permanent pool level, to the limit of maximum extended detention. The horizontal distance of this slope shall be a minimum of 3.0m. All slopes 5:1 and steeper ranging from a minimum horizontal distance of 3.0m from the permanent pool level to the property line (not including walkways and trails) shall be planted.

The *Consultant* shall determine cleanout frequency in the main cell. Refer this section for details on pond lining and existing groundwater elevations in the sections below.

Wetlands

Stormwater management Wetlands require a minimum 5 ha drainage area to function effectively. The wetland design must adhere to the MECP 2003 guidelines. Stormwater management Wetlands shall be designed to limit the maximum depth of water to 2.1m above the lowest point of the stormwater basin excluding micro pools. An additional 0.45m freeboard is required above the maximum peak flow flood level. The maximum depth of the extended detention zone shall not exceed 1.0m above the permanent pool elevation. Maximum peak flow attenuation zone shall not exceed 1.8m above the permanent pool elevation. The permanent pool depth shall range between a minimum depth of 0.15m to a maximum depth of 0.3m.

A maximum 5:1 slope below the permanent pool level is permitted around the entire stormwater management pond. A maximum 5:1 slope above the permanent pool level shall be permitted around the entire stormwater management pond. The slope shall extend from the permanent pool level, to the limit of maximum extended detention. The horizontal distance of this slope must be a minimum of 3.0m. Micro pools shall not exceed an additional maximum

depth of 0.3m below the permanent pool level. Micro pools shall not exceed 5% of the total wetland permanent pool surface area. All slopes 5:1 and steeper ranging from a minimum horizontal distance of 3.0m from the permanent pool level to the property line (not including walkways and trails) shall be planted.

Forebays

Where groundwater interference or contamination is determined to be an issue, lining will be required. The *Consultant* must outline how access to the forebay is to be provided for the purpose of maintenance. In addition, the *Consultant* must determine sediment removal frequency and how sediment removal would be conducted (i.e. equipment, forebay design). A layer of gravel material (300 mm thick) shall be placed above the liner to ensure that it is protected during sediment removal. The forebay must be dewatered prior to sediment removal. Dewatering procedures shall be provided as part of the Operation and Maintenance Manual.

Forebays are required for all stormwater management facilities. The permanent pool depth shall range between a minimum depth of 1.0m to a maximum depth of 1.5m in which a maximum depth of 0.5m shall be used for sediment accumulation. During construction, cleanout of the forebays may be required based on monitoring results and visual inspections. Forebays shall not exceed 33% of the total wet pond surface area and 20% of the wetland permanent pool surface area. All other aspects regarding the design of forebays shall conform to the above Wet Pond standards, MECP Design Guidelines and Best Management Practices. Low flow quality control shall be considered in forebay design. Low flow quality shall not be controlled in the main cell of the SWM pond and shall be contained solely in the forebays. All stormwater calculations (e.g. low flow calculations, sediment settling time etc.) are to be provided to the *Public Works and Engineering Department* for review.

Splitter maintenance holes shall be used upstream of the forebay to ensure that only low flows (up to a 1-in-2 year event) are contained within the forebay.

Excluding maintenance access routes, all access to forebays shall be discouraged through shrub plantings. Consideration should be given to provide a liner and a means to draw the forebay via gravity to facilitate maintenance. Maintenance access roadways shall provide vehicle access to forebays.

Berming

Berming around the perimeter of a facility shall be designed with a minimum top width of 1.5 m (where trail or maintenance access is not located on berm). The top of berm elevation shall be established at a minimum 0.45m above the 100 year storm quantity control water level or the highest water level. Berm subgrade shall comprise of low permeability silt of glacial till as approved by the geotechnical *Engineer*.

Geotechnical considerations should be discussed in the design of the facility berming. Earth dam type constructions of berms are acceptable to the *Township* with the addition of low permeability cut-offs to prevent underseepage and toe drains to control seepage.

Retaining walls within the stormwater block are not preferred by the *Township*, since the *Land* designated for stormwater management systems should be established on the basis of no man-made retaining systems, although in special circumstances such as stormwater management retrofits, the *Township Public Works and Engineering Department* may consider the use of retaining walls.

Hexagon cable concrete in the SWM block is only to be utilized under the five (5) year stormwater storage elevation. Where residential lots back onto a SWM facility, fencing shall be provided by the *Subdivider*/*Developer*. The *Subdivider*/*Developer* will install them in the locations and frequencies as prescribed by the *Township* between the lots and the SWM block.

Inlet Structures

Headwalls and grating shall conform to OPSD. A geodetic monument shall be established on the top of the inlet concrete headwall to assist in monitoring future water levels. The monument shall have horizontal and vertical controls in accordance with *Public Works and Engineering* standards. The benchmark shall be installed prior to registration..

Erosion protection shall be provided between the inlet headwall and forebay bottom to prevent localized scouring. Erosion protection shall match the headwall width at the inlet and shall extend a minimum 1.5 m on either side of the headwall at the forebay bottom. Protection material shall consist of rip rap underlain with geotextile or other erosion protection schemes. The protection size and depth may be based on *Consultant* recommendations and subject to review and acceptance by the *Public Works and Engineering Department*.

The invert of the Inlet shall be located above the five (5) year flood elevation plus 450mm of freeboard (or where not available, the approved otherwise high water level). The highest design storm water elevation within the stormwater management facility shall be below the underside of footing elevations of the surrounding buildings.

Outlet Structures

The minimum allowable diameter for an outlet is 100mm. For diameters less than 100mm, pipe must be protected with a perforated riser pipe design with smaller perforations or trash grate. Outlets shall not be fitted with orifice plates as flow control. Smaller diameter pipes shall be used instead. Reverse slope pipe or perforated riser pipe outlet structures shall be used for both constructed wetland and wet pond facilities unless the *Consultant* can demonstrate to the *Township Public Works and Engineering Department* and approval agencies that alternative outlet structures could be used. Alternatives shall then be provided for consideration by *Public Works and Engineering Staff*. Geotextile wrapping may not be required for these structures. For stormwater management facilities located downstream of Site Plans or *Land* use areas

with a high susceptibility for the occurrence of spills, a shut-off on the outlet structure within the proposed *Development* may be required. Maintenance pipes shall be installed to allow the facility to drain by gravity flow whenever possible. Maintenance access roadways shall provide access to outlet structures.

A weir outfall/spillway shall be considered for discharge of less frequent events in combination with the ditch inlet type of structure. Spillway erosion protection shall be consistent with attributes described herein. Erosion protection for outfalls shall generally consist of, but not limited to, cable concrete or a combination of rip rap and vegetation, with the size and depth of stone based on calculations completed by the *Consultant* and subject to Public Works and Engineering acceptance.

Outfalls to Environmentally Significant Areas are discouraged and in the rare instances when required they may require site-specific treatment as dictated by the *Township* and the Grand River Conservation Authority.

Prior to Draft Plan Approval the *Subdivider*/*Developer*/*Consultant*s must demonstrate that the storm drainage is directed to a legal outlet and that *Easement*s, blocks or other *Agreement*s have been obtained if appropriate.

Emergency Overflow Spillway

Each stormwater management facility shall provide an emergency overflow spillway to allow drainage to safely exit the facility should the outfall structure fail to function or should the storm event have a frequency HIGHER than the 100 year or maximum design storm return period. The overflow spillway shall convey the Regional Event or design storm event post-*Development* controlled peak flow whichever is the greater. An additional 0.45m freeboard is required above the maximum peak flow flood level.

The design of the spillway shall be based on calculations provided by the *Consultant* and are subject to review and acceptance by the *Township Public Works and Engineering Department.* Erosion protection shall be provided on the entirety of the spillway. Erosion protection may consist of a soil reinforcement system with a natural vegetated surface treatment or alternative protection measures as specified within the *Consultant* recommendations and acceptance by the *Public Works and Engineering Department*. When access roads cross the top of the spillway, the road shall be paved with 150mm concrete (32 MPa). Side slopes at the top of the spillway shall be 3:1 maximum, and shall have a maximum slope of 10%, if used as an access roadway.

SWM Facility Access/Maintenance

Maintenance access requirements are to be determined on a site-by-site basis, however, the following general criteria are required but not limited.

Maintenance access routes shall be continuous around the SWM facility. Controlled maintenance access routes shall be provided to both inlet and outlet structures, forebays and main cells. Maintenance access roadways shall have a minimum width of 4.5m; 450mm compacted Granular "A" and 100mm crushed limestone. 60mm HL4 binder course and 50mm HL3 surface course asphalt are required on access routes where slopes are 4% or greater.

A minimum 10m turning radius (inside radius) and a flat 20m loading area is required to accommodate maintenance vehicles. Maintenance access routes shall not exceed a maximum slope of 10:1. The design of maintenance routes and loading areas shall be to the acceptance of *Township Public Works and Engineering Staff*. Minimize the number of inlets/forebays to one (1) where possible. Access points shall be fenced using a lockable, galvanized swing p-gate. Fencing shall be on public property, 150mm from the property line. Fencing is required on all sites that are adjacent to private or residential properties. Hexagon cable concrete in the SWM block is only to be utilized under the five (5) year stormwater storage elevation.

The joint use of maintenance access roadways as community trails is encouraged by the *Township*. Joint use community trails shall conform to maintenance access roadway requirements. No surface drainage shall sheet flow across maintenance access roads that are jointly used as community trails. Maintenance access roadways should be evaluated for trail potential and discussed with the *Township* various Departments during design. Refer to Township trails master plan for more detail regarding community trails.

SWM Facility Signage

The *Subdivider*/*Developer* shall supply and install a minimum of two signs at each Stormwater Management Facility to include the SWMF Number, Location and applicable wording to the satisfaction of the *Township*.

The *Subdivider*/*Developer* shall supply and install warning signs (No Trespassing, No Dumping etc.) at the SWM Facility to the satisfaction of the *Township Public Works and Engineering Department.*

Oil/grit Separators

Stormwater management facilities fitted with oil/grit separators for a multi treatment approach shall conform to the requirements as set out in this section and MOECP guidelines, etc.

Sediment Drying Area

The design of SWM facilities being transferred to *Township Owner*ship shall incorporate a sufficient *Land* area within the SWM pond block for the *Township*s future sediment removal maintenance of the forebay and main cell. This SWM facility *Land* dedication will not be incorporated into the Park *Land* dedication. The location of the drying area is to be located immediately adjacent to the maintenance access road and to the sediment forebay to facilitate ease of access for sediment removal from the forebay and the main cell and sediment storage.

The area should be graded to allow positive drainage to the forebay and main cell at a minimum slope of 2.0% and a maximum slope of 4%. The sediment drying area shall be designed to facilitate a 1.0 m maximum storage depth and an angle of repose of 4:1 of the excavated sediment assuming 100% sediment capacity within the forebay. The drying area shall be rehabilitated at the time of maintenance.

The following must be considered and provided, as a minimum, to the *Township Public Works and Engineering Department* for review:

- Calculations of the area and depth required
- Information on existing groundwater levels on the site
- Consideration given to sediment loading on the facility
- Plan for testing of the sediment for contaminants

Major System Flow Routes in to Stormwater Management Facility

Major system flow routes shall be designed to safely convey the 100 year and Regional peak overland flow into the facility, but shall not be directed into the sediment forebay area. Overland flow routes shall be flat bottomed channels with maximum 3:1 side slopes, maximum flow depth of 0.3 m and 0.3 m of freeboard. Overland flow routes should be designed using standard hand calculations and/or hydraulic analytical techniques acceptable to the *Township Public Works and Engineering Department*. Overland flow route erosion protection may consist of a soil reinforcement system with a natural vegetated surface treatment, based on the *Consultant* and/or the *Township*'s *Public Works and Engineering Staff r*ecommendations, and subject to *Township* Public Works and Engineering acceptance. All facilities must be designed to ensure the channel is sufficient to handle major overland subdivision flow. Major overland flow routes are not to flow through private property. A legal outlet will be required for major overland flow routes

Existing Groundwater Elevation

Within the stormwater block a minimum of two (2) boreholes and monitoring wells shall be located near the centre of the main cell and forebay as part of the geotechnical investigation to assess the nature of existing soils and the groundwater elevation. The groundwater elevation shall be compared to the proposed permanent pool water elevation within the facility.

The base of the stormwater management facility must have a minimum 1m vertical separation above the seasonally high groundwater elevation. The stormwater management facility design must demonstrate that the SWM facility will not be affected by an elevated groundwater table. In the case that the SWM facility cannot maintain a 1m separation from the seasonally high groundwater table, a system or solution must be designed to mitigate this issue and demonstrate the facility will not be affected. Additional maintenance cost associated with managing groundwater levels may need to be managed by a cash in lieu arrangement .

Where soil conditions are permeable and the groundwater elevation is below the permanent pool water level, lining of the permanent pool area with an impermeable material will be required to ensure permanent pool levels are maintained. A liner will also be required when groundwater contamination may be a result of the permeable soils and the water quality within the stormwater management facility. The type and thickness of lining material shall be based on geotechnical recommendations; however, a clay liner is preferred over synthetic materials for stormwater management facilities. When a clay liner is used there must be a minimum 1.0m thick layer of clay. Additionally, a granular layer is required over the liner as a warning to avoid damage to the liner during cleanout as well as to act as a ballast to counteract groundwater uplift. The granular layer shall be constructed minimum 500 mm thick with Granular A. A thicker layer will be required based on geotechnical investigations and expected uplift from groundwater. The liner shall be shown on the design drawings and shall be designed in such a way as to prevent planting puncture.

Where the groundwater elevation is above the permanent pool water elevation, an investigation must be conducted to assess, as a minimum, the impacts of a localized reduction in groundwater levels, potential impacts to groundwater aquifer systems and flow regimes, watercourse baseflow quantity and temperature, and to assess potential slope stability and groundwater seepage concerns within the facility. The groundwater assessment will consider implications to include existing data collected from source water protection plans. The scope of this investigation will be determined based on site specific conditions. The *Consultant* shall consider all feasible design alternatives to limit or negate any impact to local groundwater levels to the satisfaction of the *Township Public Works and Engineering Department.*

Stormwater Management Facility (SWMF) Planting

The *Township* requires a Landscape Plan for the SWMF be submitted for review and acceptance by the *Township Public Works and Engineering Department* prior to finalizing the subdivision agreement and detail design.

All *Lands*caping of areas above the SWMF permanent pool level shall be installed at the *Subdivider*/*Developer*'s cost, in accordance with the accepted plan prior to initial acceptance of the landscape work. SWM plantings above the permanent pool level is to occur during the growing season either prior to or immediately following approval by the *Township* for first occupancy.

Native and non-invasive trees, shrubs, ground covers and aquatic plants are required in a low maintenance landscape design, which has regard for the ecology of the site and the eco-region. Refer to Section 5.10 for more information regarding Landscape Requirements.

Where trees are to be planted, they must be planted at a minimum rate of 1 tree (60mm cal.) per 50 square metres. The density of shrub plantings, for safety purposes, shall vary depending on the degree of slope. Shrubs are to be planted to discourage public access. 100% density equals 1 shrub per square metre, 25% density equals 1 shrub per 4 square

metres. The purpose of the bar scale is not to encourage repetitive landscape design but to act as a relative guide to associate shrub plant densities with the appropriate slope. Refer to Landscape Requirements Section 5.10 for thickness and specifications for topsoil. Willow trees are not permitted adjacent to the perimeter access road.

Deciduous trees should be planted at a minimum distance of 3.0 m from the edge of the trail. Maintenance is required to ensure that tree canopies are raised to a minimum of 2.2m and shrubs must be regularly prevented from naturalizing this zone. The planting of coniferous trees within this zone is not permitted.

For SWM ponds requiring a liner, no trees or deep rooted species are to be planted where the roots may penetrate the liner. The planting selection to be located over the liner shall be stoloniferous and shallow rooted species. The SWMF planting plan is to clearly show the furthest extent of the pond liner in plan and to provide a cross section detail illustrating the actual depth of approved planting medium over the liner with proposed plants is to be included with the planting details.

The *Subdivider*/*Developer* shall maintain the planting above the permanent pool level for a period of two years from the date of final dredging. Landscape Plans are to be prepared by an Environmental Professional (as a minimum, member of the Ontario Association of Landscape Architects) acceptable to the *Township Public Works and Engineering Department*.

Prior to the start of the two year warranty, the *Subdivider*/*Consultant* is to co-ordinate the planting of the aquatics with the Landscape *Consultant*. All aquatic plantings are to be installed during the growing season after the final dredging. The Landscape *Consultant* is to document installation of the aquatic plantings and to provide a copy of the planting purchase order for submittal with the request for planting inspection review.

Community Trails

All Community trails located within a SWM facility are to be located either above the maximum extended detention level or 5 year storm level, whichever is greater plus 0.45m of freeboard. Trails shall have a minimum width of 3.0m. The standard trail surface shall be stone dust.

To enhance user comfort and safety, a 3.0m zone on each side of the community trail shall be designed in such a way that sightlines are preserved. If barriers are required, they must not interfere with visibility or create entrapment areas. In situations where a community trail is designed within the maximum peak flow depth zone, the 3.0m separation above the trail shall have a maximum slope of 3.5:1. Below the trail, the 3.0m separation shall have a maximum slope of 6:1.

For trails that are designed around SWM Facilities, overland drainage shall be collected in a swale. No overland sheet flow drainage shall cross the swale onto the public trail.

Community Trails shall be designed in accordance with the **Township of Wilmot Trails Master Plan**.

Temporary Stormwater Facilities

In *Development* situations where the ultimate downstream facilities have not been constructed and / or where sewers have not been completed to convey storm drainage to the ultimate facility, an interim or temporary on-site facility or facilities may be considered by the *Township*. Temporary facilities shall provide an equivalent level of quality and quantity control as per the ultimate facility. Temporary facilities shall remain in place until vegetation has been established and the ultimate facilities and sewers are constructed and accepted by the *Township Public Works and Engineering Department*.

Site plan or subdivision *Agreement*s will be established to require the *Subdivider*/*Developer*s to be solely responsible for maintenance and operation of temporary facilities, as well as any *Works* associated with decommissioning of the temporary facility, including disposal of collected sediments according to Provincial guidelines, regulations and bylaws. The cost for a temporary stormwater facility including its removal shall be borne solely by the *Subdivider*/*Developer*. Estimated cost for the temporary stormwater facility is to be included in the detailed cost estimate for the *Development*.

The design criteria may be modified from those for ultimate/permanent facilities. This includes, but is not limited to the following:

- 3:1 max. side slopes from facility bottom to top of berm, and
- Facility perimeter to be fenced with 1.8 m chain link on all sides with lockable access gate in accordance with OPSD.
- Signs including No Trespassing Private Property, No Dumping etc.

As-Recorded Requirements

This shall include monitoring requirements as determined by the applicable Subwatershed study or Watershed study, GRCA, MECP or *Township Public Works and Engineering Staff*. An as-recorded topographic survey incorporated into the stormwater facility engineering plans shall be provided along with the engineering calculations to determine and verify, but is not limited to, the following:

- Permanent pool volume;
- Active storage volume;
- Liner thickness and type (clay, synthetic);
- Pond cover details (granular etc.)
- Cooling trench/infiltration pipe;
- Drying storage area
- Legal outlet configuration
- Outlet monitoring requirements, as per ECA requirements

- Berm construction (earth material, compaction tests, etc.), and
- Inlet and outfall structure details (headwall elevation, inverts).
- Forebay bottom, main pond bottom
- Toe drain location and elevation

In addition, As-recorded information shall certify and show as a minimum:

- Maintenance Access Road (Material, compaction test locations etc.)
- Fencing, Gates, Signage (incl. Reflectivity testing locations)
- Overflow Weir Construction
- Groundwater Monitoring Levels
- Creek Monitoring
- Post Construction Certification
- Drawdown time monitoring
- Outlet velocity monitoring
- Cooling trench details and elevations (if applicable)

The *Consultant* shall certify that the stormwater management facility has been constructed and is operating in general conformance with the *Consultant*'s plans, design reports and ECA requirements. Should the *Township*, *Consultant*, approval agencies or *Peer Review Consultant* determine that the facility is not performing according to the *Engineer*'s design, the *Consultant* shall provide recommendations for the constructed facility to be retrofitted by the *Subdivider*/*Developer*.

8.15 Monitoring

Purpose

The purpose of the Monitoring Plan is to:

1. Evaluate the performance and effectiveness of the Stormwater and Environmental Management System (i.e. design of the stormwater quantity and quality mitigation techniques, groundwater level, water balance, sediment settling time, post *Development* flow (m3/s), presence of debris at inlets and outlets etc.). This does not include the storm sewer system.

2. Provide the necessary information to adjust and/or optimize the plan recommendations through a process of Adaptive Environmental Management. Adaptive Environmental Management is a process of monitoring various environmental parameters established within a monitoring plan for a *Development* site. Based on monitoring results, necessary adjustments to the site's environmental management controls would be made to meet the environmental objectives for the site by the *Subdivider*/*Developer* until Final acceptance by the *Township Public Works and Engineering Department*.

Types of Monitoring Plans

Generally, there are two types of monitoring. The first is a "*Development* level" plan prepared for a single *Development* and its associated infrastructure. The details of this type of plan would be part of the Preliminary and Detailed Stormwater Management Design Reports and may be discussed in an Environmental Impact Statement. The scope is limited to direct on-site infrastructure that is part of the *Development*, however off-site monitoring may be required (e.g. creek monitoring, infiltration monitoring, groundwater monitoring etc.) to determine the effectiveness of the stormwater management infrastructure and possible impacts on the receiving system. This type of monitoring plan and implementation is paid for by the *Subdivider*/*Developer*.

The second type of monitoring is included in a Master Planning document, such as a Watershed Plan, Subwatershed Plan, Master Drainage Plan or Class Environmental Assessment. The scope typically includes numerous environmental indicators and infrastructure elements as determined through consultation with stakeholders and agencies. This plan is paid for by the *Development* Community. The monitoring recommendations contained within these Master Planning documents will provide direction for monitoring programs.

Process/Protocol

Each *Consultant* will be responsible to ensure that a Monitoring Plan is in place and is satisfactory to the *Township*. In the event that the subject *Development* is part of an area where a Master Plan has been completed, the *Consultant* shall document how the subject *Development*, its infrastructure and its *Development* Impact Monitoring Plan complies within the Master Plan recommendations.

Monitoring plans must be established for all Greenfield *Development*s. Where the subject *Development* is 'Non-Greenfield' (i.e. typically Infill, 'Brownfield' or Site Plan) and is not part of an area covered by a Master Monitoring Plan, the *Consultant* shall consult with *Township Staff* during the Pre-Study Conference stage to determine if monitoring is required. The monitoring plan will determine the potential *Development* impacts on-site and within the receiving system. Monitoring plans for Infill, 'Brownfield' or Site Plan *Development*s shall not be as extensive as required for 'Greenfield' *Development*. Costs of the monitoring program would be borne entirely by the *Subdivider*/*Developer*.

The *Subdivider*/*Developer*'s *Consultant*, who must be a qualified Professional *Engineer* in Ontario, will be responsible to prepare and submit at a minimum bi-monthly technical memorandums, annual reports, or as required by Master Monitoring Plan (as outlined in e.g. Watershed, Subwatershed or Master Drainage Plan), to demonstrate that monitoring has been completed to *Township, GRCA and other agency* satisfaction. More frequent reporting may be required to monitor the performance of the stormwater management infrastructure.

Monitoring Periods

Important factors for *Development* impact monitoring include pre-construction, during construction and post-construction or substantially developed requirements. Subdivision and Site Plan *Agreement*s and/or supporting studies to *Development* Applications detail the time periods for, and frequency of, monitoring. The monitoring plan will need to be detailed in the Preliminary and Detailed Stormwater Management Report.

Monitoring status reports must be provided to the *Township Public Works and Engineering Department*, as a minimum, on a bi-annual basis or as prescribed by *Township Public Works and Engineering Staff*.

What is Monitored

Defining what is monitored and the length of the monitoring program relate to the characteristics of the *Development* and in-situ conditions, including the sensitivity of the local receiving system and the availability of existing information. The monitoring scope requirements will be determined by *Township Public Works and Engineering Staff*, commenting agencies and current Best Management Practices (BMP) through the review of the Preliminary and Detailed Stormwater Management Reports and EIS where applicable. DFO will require monitoring plans should a project constitute a Harmful Alteration, Disruption or Destruction (HADD) of fish habitat and are typically a minimum length of three (3) years. Additional monitoring requirements to those set out in this section may also apply as part of the Environmental Compliance Approval (ECA). Where the requirements of the ECA conflicts or differs from this document, the more stringent requirement applies.

Monitoring requirements shall follow the recommendations of the relevant Watershed study, or Subwatershed study. In the absence of this type of study, monitoring shall include the water quality parameters as noted by the GRCA and the *Township*. Two (2) hardcopies as well as a digital submission of all reports shall be provided to the *Township Public works and Engineering*. The digital submission may require entering the water quality results in a spreadsheet or database.

Post-Construction Monitoring Plans for Stormwater Management Facilities

Introduction

After 95% build-out, the facility has been cleaned out and final aquatic / landscape plants have been planted and established, the *Subdivider*/*Developer* must request in writing, approval to begin the post-construction monitoring program.

The purpose of the post-construction monitoring program is to ensure that the stormwater management facility including end-of-pipe infiltration facilities (if any) meet the design criteria. It is also in place to identify any specific additional maintenance requirements and remedial *Works* that may be necessary.

The post-construction monitoring program must be in place for a minimum of 2 years prior to Final Acceptance of the SWM facility, and is a continuation of the pre and during construction monitoring program. The reports shall be submitted to the *Township* at six (6) month intervals. Should the monitoring results show that the SWM facility is not functioning as outlined per the ECA certificate and *Development* application submittals, the *Subdivider*/*Developer* is responsible to remediate the SWM facility in order to meet the outlined objectives at the *Subdivider*/*Developer*'s own expense.

Monitoring Criteria

The monitoring reports must compare results to the design criteria. At a minimum, the monitoring reports must indicate the designed Total Suspended Solids (TSS) removal percentage compared to the actual removal percentage, the temperature mitigation and facility outflow.

As a minimum, the locations selected for monitoring shall be at the inlet and outlet of the facility, as well as upstream and downstream of the receiving watercourse.

The locations of the monitoring equipment shall be such that ambient temperature and other physical characteristics do not misrepresent the data. During the monitoring period, if it is found that the data is being influenced by other conditions (ambient air temperatures etc.), the monitoring equipment shall be relocated to give an accurate representation of the SWM facility condition, with the relocation reflected in the monitoring report.

The parameters and frequency of testing shall be sufficient to provide an accurate depiction of how the facility is functioning.

TSS: Water samples shall be taken at the inlet and outlet of the facility and tested at an accredited laboratory or on site with calibrated testers to determine the facility's removal of TSS.

The recommended annual grab sampling frequency shall be as follows but not limited to:

- 4 wet weather sampling events
- 5 dry weather sampling events
- 1 melt/wet weather event

Wet samples are collected during the rising limb of a significant storm event (typically greater than 10mm). Dry weather sampling is limited to days without rain events and is not conducted within 48 hours after a significant storm event.

Flow Monitoring: To determine the outflow of the facility, flow measuring equipment must be installed at the inlet and outlet of the facility and shall remain in place until final acceptance is granted.

Detention Time: For all types of SWM facilities, including infiltration facilities, the detention time must be recorded to determine functionality of the facility.

Temperature: Where temperature mitigation techniques are part of the facility's design, temperature measuring equipment must be installed at the inlet of the facility, inlet of any cooling devices, outlet of the facility as well as in the receiving stream or watercourse to show the facility's ability to reduce the water temperature. If the devices are placed in such a way as to be influenced by external sources, the locations must be adjusted to provide the most accurate readings.

Chlorides: Where end of pipe infiltration facilities exist with winter by-pass systems, grab samples for chlorides shall be taken at the infiltration facility both during and after the by-pass system is active to determine if the by-pass system is diverting chlorides from end-of-pipe infiltration cells.

Analysis of Test Results

The results of the monitoring report shall be summarized and compared to the design criteria, and the raw data must be provided. If the data is shown to be exceeding the design criteria in the first year of testing, an explanation as to why there are exceedances shall be included, as well as the implementation of proposed methods to mitigate the exceedances for the following year. An extension of the monitoring program may be required at this stage. If the test results still show exceedances to the criteria after the final year of monitoring, retrofit options must be implemented, by the *Subdivider*/*Developer* at their cost prior to final *Assumption* by the *Township Public Works and Engineering Department*. The monitoring period shall also be extended at the *Subdivider*/*Developer*'s cost. The monitoring reports shall include current sediment volume and storage summaries, as well as indicate when any clean-outs have taken place.

8.16 SWM Facility Acceptance Requirements

Initial SWM Facility Acceptance Requirements

The initial SWM facility acceptance process includes, but is not limited to, inspections of the following *Works*:

- Inlet piping and structures within the SWM block (Splitter MHs, Headwalls, etc.);
- Outlet piping and structures (Weirs, Quantity and Quality control structures, etc.)
- Cooling trenches
- Infiltration structures
- Earth Works required within the SWM Block
- Erosion protection such as gabion mats, rip rap treatment, etc.
- Cable Concrete
- Forebay Weir
- Spillway

- Maintenance access (asphalt/concrete/turfstone)
- Landscaping above the 5 year elevation (tree types broken out);
- Landscaping below the 5 year elevation (tree types/aquatics broken out);
- Sod
- Seed
- Topsoil
- Fine grading
- Walkways (stone dust/asphalt etc. to be broken out separately);
- Fencing (types to be broken out separately);
- Gates or entrance features;
- Signage
- Other infrastructure within the pond; and
- Surface asphalt
- Receiving Outlet Condition

Prior to initial acceptance of the SWM facility, the following conditions are to be met as a minimum:

- Bathymetric survey of the facility
- Satisfactory inspections (grading, trails, drainage, fencing etc.) from the *Township Public Works and Engineering Department*
- Pre-Construction and during construction monitoring reports / technical memorandums
- All test results (e.g. compaction, geotechnical, asphalt, concrete, CCTV, mandrel, flushing, signage reflectivity etc.) are found to be satisfactory by *Township Public Works and Engineering Staff*
- Daily inspection and E&S reports supplied and reviewed by *Township Public Works and Engineering Staff*. *Subdivider*/*Developer* to ensure that reports are provided to the *Township Public Works and Engineering Department* on a regular basis during construction.
- Repair of any erosion that occurred during construction
- Vegetation planting
- Geodetic Monuments / Demarcation Posts
- Certification letter provided to *Township Public Works and Engineering Staff* to confirm the pond construction was as per the approved drawings (inverts, elevations of facility bottom, berm and soil materials, pond liner etc.); and
- An as-recorded survey of the SWM pond

Where SWM facilities require seasonal valve operation, the *Subdivider*/*Developer* is responsible to operate the valves during the *Maintenance Period*, and to provide the operations and maintenance manual.

Final SWM Facility Acceptance Requirements

Prior to Final Acceptance of the facility, the following conditions but not limited to must be met:

- Clean-out of the SWM facility after 95% buildout and after surface *Works* completion: After 95% build out of the catchment area, all cells of the facility must be cleaned out following best management practices and with all applicable permits obtained. A survey shall be provided to the *Township Public Works and Engineering Department* to confirm all accumulated sediment has been removed. The survey shall consist of a bathymetric survey of all storage cells including the forebay and any main cells or wetland areas to obtain the accumulated sediment volumes. These surveys shall be submitted to the *Township Public Works and Engineering Department* for review with the formal request to commence the post construction monitoring program. The sediment volume shall be compared to the actual designed/constructed permanent pool volume.
- Min. 2 years of post-construction monitoring: After 95% build-out has been reached and the clean-out completed, a formal request to commence the post-construction monitoring must be submitted to the *Township Public Works and Engineering Department*. Any Landscaping below the 5-year storm level that is required for water quality treatment shall be installed prior to monitoring.
- Bathymetric survey: When the min. 2 year post-construction monitoring is completed, a bathymetric survey of all cells must be conducted. If the sediment survey shows the required permanent pool volume is met, and there are no areas with sediment accumulation greater than 0.1m, then no further clean out is required by the *Subdivider*/*Developer*. After review and acceptance of the monitoring and sediment survey results, the *Consultant* may proceed to request final inspection.
- Satisfactory inspections and sign-off: All items in the SWM Block (underground and surface *Works*) are to be inspected and accepted as a whole after the min. 2 years of post-construction monitoring has been accepted by the *Township Public Works and Engineering Department*.
- Review and acceptance of final acceptance package: The package shall include, as a minimum, the Monitoring Report, Operation and Maintenance Manual, As-recorded deliverables, Letter of *Owner*ship transfer and the SWM Pond Acceptance Checklist.
- Change of *Owner*ship: The *Developer*/*Subdivider* will need to notify the MECP regarding change of *Owner*ship and receipt of this must be provided to *Township Public Works and Engineering Staff*.

8.17 Engineering Submissions

The engineering submissions relating to Stormwater Management that must be submitted and accepted by the *Township Public Works and Engineering Department* prior to the start of construction (i.e. clearing and grubbing, earthworks, servicing etc.) are, but are not limited to:

- Outlet legal status
- Pre-construction monitoring
- Preliminary Stormwater Management report;
- Environmental Impact Study (EIS)
- Hydrogeology and Geotechnical Reports
- Slope Stability Reports

- SWMF Planting Plans
- Final Design - Stormwater Management report;
- Erosion and Sediment Control detailed drawings and continuous construction monitoring plans/reports
- Detailed Stormwater Management facility engineering drawings
- Detailed Cost Estimate for the *Works*
- MECP ECA Permit for Stormwater Management facilities, GRCA Permits and all other required permits;
- Operations and Maintenance Manual;
- SWM facility monitoring reports and/or Memorandums
- External agency approvals

Stormwater Management Report

The Stormwater Management Report shall include the following list of items viewed as a generic list applicable to both preliminary and detailed stormwater management reports.

- Plans showing:
    - Project name and pond ID number(s) (as applicable);
    - 30T or 58M numbers (if subdivisions);
    - Lot and road layout with Land use;
    - Elevations at key points (in a contour map);
    - Any surveyed constraint lines (e.g. top of bank, floodlines, wetlands);
    - Minor drainage system, with storm sewers, maintenance holes, catchbasins, ditches, swales, *Municipal Drains*.
    - Major drainage system with overland flow routes at key point and throughout the sites (e.g. Right of Way, natural channels, *Municipal Drains* etc.);
    - Site Plan Land use of quality and quantity controls (zoning requirements)
    - Details of stormwater management practices, e.g. storage facilities, groundwater elevation, slope stability, etc.; and
    - Erosion and sediment controls, requirements, and criteria.
- Descriptions of:
    - Receiving system and outlet including confirmation of legal status;
    - Classification of site and downstream aquatic habitat per DFO/MNR/MECP/GRCA guidelines and requirements;
    - SWM criteria for quantity, quality, flooding and erosion control;
    - Hydraulic analysis, as required of floodplains for major flow elements;
    - Design of SWMPs to meet applicable criteria, policies and guidelines;
    - Erosion and sediment control plan describing existing site conditions, erosion potential, down gradient risk assessment, and anticipated erosion and sediment controls, including staging
    - Maintenance and monitoring
- Tables showing:
    - Hydrologic parameters for existing and future Land use (Zoning Requirements);

  - Pre and post-*Development* peak flows and volumes at all outlets;
  - Stage/storage/discharge relationships for SWMPs, and
  - Overland flow depths and velocities on roads and at outfalls.
  - Total impervious area and pervious area of each lot and block
- Figures/drawings showing:
  - General location plan
  - Drainage catchment areas for existing and future Land use including all external areas
  - Details of overland flow routes
  - Details of SWMP facility appurtenances (inlets and outlets)
  - Details of erosion and sediment controls
  - Schematic of computer models
  - Overall map of swales through the site and detail of conveyance capacity
  - Details of minor system conveyance (storm sewer, swales, ditches etc.), volume of system conveyance.
  - Detail of legal outlet control route
- Detailed Calculations showing:
  - Minor Drainage System: Stormwater conveyance sizing through storm sewers, ditches, swales, natural channels
  - Major Drainage System: Roadway conveyance calculations and sizing

Note: all plans and reports are to be stamped, dated and signed by a Professional *Engineer* licensed in Ontario.

Software

The MIDUSS software shall be the preferred software for hydrologic modelling however other software may be used based on discussions with *Township Public works and Engineering Staff*. The digital model and PDF output must be submitted to the *Township Public Works and Engineering Department.*

Water Balance (Groundwater)

As required by applicable subwatershed studies and approval agency requirements to ensure post-*Development* infiltration targets are met as specified in the appropriate Master Drainage Plan or Subwatershed Study and any other type of studies. An as-recorded drawing and test results in table/report format and other such documents as required shall be provided to the satisfaction of the *Township Public Works and Engineering staff*.

Preliminary Stormwater Management Report

Preliminary stormwater management reports precede detailed stormwater management reports and are typically a level of detail below the detailed stormwater management reports. Preliminary stormwater management reports shall be provided at the time of Draft Plan of

Subdivision Application for the review and accepted of *Township Public Works and Engineering Staff*.

The *Consultant*, before submitting a detailed stormwater management report, shall receive In-Principle acceptance of the submitted preliminary Stormwater Management report from the *Township Public Works and Engineering Department*, Grand River Conservation Authority and Region.

Final Design – Stormwater Management Report

The outline for a detailed stormwater management report is the same as the preliminary stormwater management report outline, but with proposed design detail documentation. The Detailed Final SWM report is submitted with the first engineering submission for the review of *Township Public Works and Engineering Staff*.

MECP ECA Applications for Stormwater Management facilities

The *Consultant* shall prepare the MECP ECA Applications for Storm Sewers/Services and SWM Facilities and submit four (4) copies to the *Township Public Works and Engineering Department* for signing of the Statement of Municipality prior to submission. The *Subdivider*/*Developer* shall be responsible for all documents required for the submission and payment of application *Fees*.

Prior to final acceptance of the Stormwater Management Facility by the *Township Public Works and Engineering Department*, the *Owner*ship of the ECA certificate shall be changed from the *Subdivider*/*Developer* to the *Township*. The *Subdivider*/*Developer* is to notify the MECP of the change of *Owner*ship and provide the *Township* with confirmation of transfer of *Owner*ship.

Electronic Submission of As-Recorded Stormwater Management *Works*

As-Recorded Engineering Drawings includes plan and profiles, as well as, details of stormwater management infrastructure.

The *Consultant* shall certify that the stormwater management facility has been constructed and is operating in conformance with the accepted plans and design report. Should the *Township*, *Consultant* or Approval Agencies determine that the facility is not performing according to the *Engineer*'s design, the *Consultant* shall provide recommendations for the constructed facility to be retrofitted by the *Subdivider*/*Developer*. The *Consultant* shall circulate the as-recorded survey, stormwater management certification and excel spreadsheet documenting as-built information (including *Township* Asset Management information) to *Township Public Works and Engineering Staff*.

SWM Facility Topographical Survey

An as-recorded topographic survey incorporated into the stormwater facility engineering plans stamped and signed by the *Engineer* shall be provided along with the engineering calculations to determine and verify the following as a minimum:

- Permanent pool volume
- Trails / Maintenance Access
- Overflow spillway
- Active storage volume
- Berm, slope, bank construction
- Inlet and outfall structure details; and
- SWMF planting plan

Operations and Maintenance Manual

The submission of the Final Design – Stormwater Management Report must be accompanied by a separate "Operations and Maintenance Manual", which will outline the operational and maintenance procedures required to ensure the proper functioning of the facility as defined within the report. The O&M Manual is to comply with the Environmental Compliance Approval (ECA) requirements, including monitoring. A copy of the ECA is to be included in the O&M Manual. This document is to be followed by the *Subdivider*/*Developer* during the *Maintenance Period* and include recommendations for the *Township* after final acceptance of the pond. Updated inspection reports must also be included in the O&M Manual. The *Consultant*, in addition to reviewing materials herein and the most recent Ministry of the Environment guidelines, may also review the document Stormwater Management Facility Sediment Maintenance Guide, 1999 by Gre*enland* International Consulting Inc. as amended for typical operations and maintenance requirements. The following provides the minimum requirement for the format and content of the Operations & Maintenance Manual:

Facility Design Brief

Include general design information about the facility including but not limited to:

- The main function of the stormwater system
- Any site specific characteristics of the facility that need to be taken into consideration during operation and maintenance (e.g. vehicular access constraints, presence or suspected species at risk in area, presence of invasive species in or around the site etc., Groundwater elevation)
- Expected quantity and quality performance of the facility under varying conditions such as dry weather conditions, winter conditions, frequent rainstorms and rainfall events exceeding the design capacity etc.
- Presence and operation of any stormwater maintenance or by-pass valves

8.18 Inspections

The *Consultant* shall develop an inspection protocol which follows Approval Agency and *Township* requirements. This protocol shall be included in the final SWM report.

Inspections shall be completed to ensure the safety of the public, assess property damage and the performance of the facility with respect to the design objectives and the Environmental Compliance Approval. It shall include but not be limited to what to inspect for, proposed method of inspection for sediment accumulation, proposed frequency of inspection and actions to be taken with respect to certain findings.

This section shall be separated into the following categories:

- During construction *Development* inspections
- Post-construction *Development* inspections
- Post-*Development* inspections

8.19 Scheduled Maintenance

The anticipated maintenance activities for each facility shall be listed and outlined in detail. The steps to be followed by the *Subdivider*/*Developer* during and post-construction, and recommendations for the *Township* to follow after the final acceptance shall be provided. The activities specified shall be site specific and include any specialized equipment needed, seasonal preparation if applicable, and frequency of maintenance for each activity. The list of activities shall include but not be limited to:

- Litter/Debris Removal
- Frequency of inlet /outlet inspection
- Reporting to comply with ECA
- Access Path Maintenance
- Vegetation Maintenance
- Invasive Species Maintenance – include a strategy to follow for treatment and removal of invasive species anticipated
- Infiltration Cell Maintenance
- Valve Maintenance – Provide number of turns to open/close
- Sediment Measurement
- Sediment Removal
    - Forebay Sediment Removal
    - Main Cell Sediment Removal

8.20 Spills Action Plan / Pollution Prevention Plan

Although each facility should operate uninterrupted with a comprehensive preventative maintenance program, there may be unexpected failures that can lead to spills. Each SWM facility shall have a Spill Control and Response Plan outlined specific to the facility that the

Subdivider/*Developer*'s *Consultant*s will follow during construction, post construction and the *Township* after final acceptance. This plan shall consider the type of potential failure events (oil spill, sediment breach due to construction, nutrient loading, chlorides, inflow from sewage pumping station overflows (if applicable) etc.), determine whether it is to be considered an emergency, identify who should be notified during regular hours and after regular hours and what actions should be taken in the interim.

This plan shall outline the recommendations on how to contain the spill at the stormwater management facility to prevent further release downstream, and include number of outlets to plug or valves to operate. If the facility includes infiltration cells, the plan shall specify the risks associated with the various types of spills and include preventive measures specifically for the infiltration cells.

Significant mishaps should be reported immediately to the supervising *Engineer*, the Municipality, and environmental monitor who notifies the Spills Action Centre (1-800-268-6060) via the Contract Administrator. Details of the incident as well as updates on site conditions and containment/clean up efforts must be provided to the attending agency.

8.21 Cost

The "Operations and Maintenance Manual" shall include a detailed breakdown of estimated annual maintenance and operating costs per year and upto 50yr life cycle

Section 9 – Erosion and Sediment Control

Introduction

The purpose of the erosion and sediment control (ESC) guidelines is to provide requirements for ESC measures, including design, installation, inspection, monitoring, and removal. Construction site water management and the control of erosion and sediment is a critical part of any construction activity that disturbs soils.

Most construction activities result in major modifications to the landscape. The removal of soils stabilizing vegetation and the exposure and compaction of fine grained soils can result in significantly increased stormwater run-off and soil erosion rates. The International Erosion Control Association (IECA) indicates that, in the absence of practices to manage run-on, run-off, erosion, and sedimentation, the production of eroded sediment is typically 200 to 400 times greater on construction sites when compared to undisturbed conditions. Activities such as, construction site dewatering, are a potential source of sediment loading into storm sewers. Dust caused by disturbance of exposed, dry sub-soils by wind and equipment also have a significant impact.

Additionally, disturbed sediment or eroded soils can transport deleterious substances such as hydrocarbons, metals and nutrients, negatively impacting water quality and aquatic habitat. Fish habitat can be disturbed or destroyed by increased sediment loading, as sediment can smother spawning beds and suffocate incubating eggs and benthic invertebrates. Chronic high turbidity can reduce productivity, irritate the eyes and gills of fish (reduces oxygen uptake and increases risk of infection and disease), and affect the feeding ability of many species of fish.

The hydrology of a site changes during construction. Other impacts on erosion and sedimentation include soil-distributing activities. Exposed subsoil compacted by equipment, can result in increased imperviousness (reduced infiltration of surface water) which leads to increased quantity and rate of surface run-off. The increased surface flow raises the erosive potential of stormwater and snowmelt.

A wide variety of erosion and sediment control practices have been developed, many of which have proven effective when designed and implemented as intended. However, failure to properly control erosion and sediment during construction is still common. Damage to infrastructure, property, and the environment can be costly to repair and can lead to fines and legal action.

Sediment deposition in water bodies can affect stream channel morphology (increased flooding potential) and damage or destroy terrestrial habitat.

Documents beyond these Engineering Design Standards that may be applicable for an engineering design include, but are not limited to, the as amended versions of:

- Ontario Provincial Standard Specifications and Drawings (OPSS and OPSD)

- Greater Golden Horseshoe Area Conservation Authorities (GGHA CA) Erosion and Sediment Control Guideline for Urban Construction, December 2006
- Ministry of Environment Conservation and Parks (MECP) Design Guidelines for Drinking Water Systems
- MECP Design Guidelines for Sewage *Works*
- MECP Stormwater Management Planning and Design Manual
- MECP B-6 Guidelines for Evaluating Construction Activities Impacting on Water Resources
- Ontario Building Code
- National Standard of Canada CAN/CSA-W202-18 - Erosion and Sediment Control Inspection and Monitoring
- Relevant municipal soils map
- Grand River Conservation Authority Erosion and Sediment Control Guideline for Urban Construction
- Ministry of Agriculture, Food and Rural Affairs Soils Survey Reports and Maps – Waterloo #44

General Requirements

Erosion and sediment control measures are to be designed, constructed, and implemented in accordance with Grand River Conservation Authority (GRCA) guidelines entitled "Erosion and Sediment Control Guideline for Urban Construction, Greater Golden Horseshoe Area Conservation Authorities (GGHA CA), December 2006" and the National Standard of Canada CAN/CSA-W202-18 (CAN/CSA-W202-18) entitled “Erosion and Sediment Control Inspection and Monitoring.” All ESC measures, including filter fabric and tree protection fencing, as required on-site must be maintained and kept in good repair considering weather conditions. The *Engineer* retained by the *Subdivider* / *Developer* / Builder will ensure that reputable and qualified *Contractor*s / sub*Contractor*s undertake the necessary work to maintain ESC measures and provide written confirmation of corrective action according to CAN/CSA-W202-18 and/or by the Municipality/GRCA and Engineering (*Owner*'s) Representative.

To meet the goal of improved planning and implementation, the *Engineer* shall recognize that the erosion and sediment control report and drawings prepared at the project planning stage only provides an initial appraisal of the site conditions, and prescribes practices which are based on that appraisal. Site conditions change and the Engineer will be required to update plans, inspections and practices need to be easily modified and updated as the project proceeds. This requires ongoing involvement and assistance from regulatory agencies, including *Township Staff.*

Inorganic materials are classified as follows: sand (0.05 – 2.0 mm diameter), silt (0.002 to 0.05 mm diameter) and clay (< 0.002 mm diameter).

No *assumption* of any infrastructure will be completed until full restoration to the environment beyond the limits of the site (where applicable due to erosion from the site) and proper removal of the erosion and sediment control is complete.

Erosion Control Criteria

For all *Development and Capital* sites, the minimum erosion control requirement is extended detention of the 4 hour, 25mm Chicago distribution rainfall event for 24 hours.

Inspection and Performance Monitoring

Erosion and sediment control measures, inspection, and performance monitoring are to be implemented in accordance with Grand River Conservation Authority (GRCA) guidelines entitled "Erosion and Sediment Control Guideline for Urban Construction, Greater Golden Horseshoe Area Conservation Authorities (GGHA CA), December 2006" and the National Standard of Canada CAN/CSA-W202-18 entitled “Erosion and Sediment Control Inspection and Monitoring.”

The erosion and sediment control plan shall provide the framework for the inspection, maintenance including the need for repair, removal, and record-keeping procedures during all stage of construction and warranty period.

Inspections of the ESC measures must be completed on a regular basis and after every significant rainfall/snow melt event. All inspection information, as per CAN/CSA-W202-18, must be sent to the *Public works and Engineering Department* within 1 week of completing the inspection. During inactive construction periods (where the site is left alone for 2 weeks or longer), as a minimum, a monthly inspection shall be conducted in addition to the above. All damaged ESC measures must be repaired and/or replaced within 48 hours of the inspection.

An effective inspection program must include, but is not limited to, the following:

- Identification of Personnel: Names and contact information of project members assigned to each task as well as agency/enforcement contacts. A communication protocol must also be developed to ensure effective reporting and compliance.
- Details and locations of the environmental constraints for an undertaking including maps, reports, approvals, and permits.
- Design and construction drawings detailing the erosion and sediment controls installed which shall be updated throughout the construction period.
    - High-risk areas shall be identified in these drawings and routinely evaluated.
- Inspection schedule: This must include inspection times, areas, and person(s) responsible for the inspections. A ‘walk-through’ inspection of the construction site must be undertaken in advance of winter conditions or anticipation of large storm events (or a series of rainfall and/or snowmelt days) that could potentially yield significant runoff volumes. The regular inspections shall occur during all construction stages and should be based on, at a minimum, the requirements identified in the permits and approvals.

- Condition of filter cloth shall be recorded during each inspection, and changed as needed.
- Equipment used for verifying sediment effluent discharge.
- Post-construction erosion control plan for remediation.

Receiving Watercourse Monitoring

Receiving watercourse monitoring must be conducted if the Capital and *Development* projects meets the following industry best practice criteria, or as requested by the *Township* Public Works and Engineering Department or approval agencies:

- The location of the site is adjacent to a watercourse; and
- The size of the site is greater than 10 hectares.

All receiving watercourse monitoring shall be in accordance with CAN/CSA-W202-18. The CAN/CSA-W202-18 standard is applicable to design rainfall events up to and including a 5-year design storm.

As per CAN/CSA-W202-18 the following levels shall not be exceeded:

- Measurements of total suspended solids (TSS) within a receiving watercourse shall not exceed 25 mg/L. TSS above the receiving watercourse's background levels for short-term exposure periods (e.g., 24 hours) and the maximum average increase above background for longer term exposure periods (e.g., 24 hours to 30 days) shall not exceed 5 mg/L.
- When the receiving watercourse's background levels are between 25 and 250 mg/L, the maximum increase in TSS above background shall not exceed 25 mg/L. When the receiving watercourse's background levels are greater than 250 mg/L, the increase in TSS above background shall not exceed 10% of the background level.
- Where turbidity (NTU) measurements are preferred and allowed by contract or permit, the maximum increase in NTU above the receiving watercourse's background level shall not exceed 8 NTU for short-term exposure periods (e.g., 24 h). For longer term exposure periods (e.g., 30 days), the maximum average increase above background shall not exceed 2 NTU.
- When the background level of a receiving watercourse is 80 NTU or less, the maximum increase above background shall not exceed 8 NTU. When the background level in the receiving watercourse is greater than 80 NTU, the maximum increase shall not exceed 10% of the background level.

Effluent Discharge Monitoring

All effluent discharge monitoring shall be in accordance with CAN/CSA-W202-18. Where effluent discharge monitoring is required by contract, permit, or authorization, the *Inspector* (consulting *Engineer* or *Township*) shall measure flow rate and collect water samples at the point of discharge.

Measurements of effluent water at the point of discharge from the construction site shall not exceed 25 mg/L TSS.

Inspection and Monitoring Documentation and Communication

Each inspection record shall be in accordance with CAN/CSA-W202-18 including, but not limited to, the date and time, weather conditions, and photos. This includes inspection before construction, inspection during construction, inspection post construction, and any other required inspections.

Spill Control and Response

The erosion and sediment control plan shall clearly outline the project-specific spill control and response plan procedures. Significant mishaps must be reported immediately to the supervising *Engineer*, the Municipality, and environmental monitor who notifies the Spills Action Centre via the Contract Administrator. Details of the incident as well as updates on site conditions and containment/clean up efforts must be provided to the attending agency.

Inspection and Monitoring Personnel

Erosion and sediment control measures inspection shall be carried out by a Qualified Erosion and Sediment Control *Inspector* (QESCI) before construction, during construction, and post-construction and in accordance with CAN/CSA-W202-18.

At a minimum, inspections by the QESCI shall continue until the site achieves a min. 80% stabilization. Any repair work and sediment removal must be completed as required to ensure that all measures are functioning as designed. No *assumption* of any infrastructure will be completed until full restoration to the environment beyond the limits of the site (where applicable due to erosion from the site) and proper removal of the erosion and sediment control is complete.

The *Inspector*'s role is to verify that the prescribed erosion and sediment control measures are installed and functioning in accordance with the erosion and sediment control plan.

Qualifications

The *Contractor*/*Consultant* shall use a qualified erosion and sediment control *Inspector* (QESCI) with qualifications in accordance with CAN/CSA-W202-18 and shall be able to effectively inspect and monitor erosion and sediment control measures.

Section 10 – Municipal Consent Requirements

Introduction

A *Municipal Consent* is the municipal authorization for a utility company, and/or corporation, to occupy a specific location above or below ground within the *Township* rights-of-way. *Municipal Consent*s are only issued to utility companies, commissions, agencies and private Applicants who have the authority to construct, operate and maintain their infrastructure within the right-of-way as established through legislation, terms of an *Agreement* with the *Township*, or a Municipal Access *Agreement*.

All utility work, with a few exceptions, within rights-of-way requires *Municipal Consent* (MC) and a Road Work Permit (RWP) from the *Township*'s Public Work and Engineering Department with the exception of Emergency *Works*. A RWP for utility *Works* will not be granted until MC is granted by the *Public Works and Engineering Department*. The Applicant understands and agrees that in making an application for MC the Applicant agrees to abide by the terms and conditions of the MC and *Municipal Consent* Requirement Manual.

The approval of a MC is valid for a period of one year from the date of issuance. If the work is not completed in its entirety within the one-year period, the Applicant must reapply for consent to locate the remaining work within the right-of-way.

General Requirements

In making an application for an installation within the road allowance, the applicant must agree to the following, but not limited to:

- If the work arising out of an application does not commence within six (6) months of the issuance of the consent, the applicant will be required to apply for an extension of the *Municipal Consent*;
- A RWP must be issued prior to the commencement of work on the *Township* Road Allowance; and
- The applicant shall provide as-constructed or as-recorded drawings of the completed work to the *Township*.

Work Permitted without MC

The following types of work require only a RWP:

- Emergency work required to maintain or restore existing service;
- Exploratory work to investigate existing Plant (any poles, cables, pedestals etc.) condition;

All other types of work require both a MC and a RWP including:

- Installing new Plant

- Repair of existing Plant (same horizontal and vertical location);
- Making additions or upgrades/alterations to existing Plant
- Excavating, trenchless work within the right-of way
- Any service drops not requiring the removal, relocation or alteration of any adjacent infrastructure.

Emergency Work

Emergency work is permitted prior to submission of a RWP Application. The completed RWP Application must be submitted to the *Public Works and Engineering Department* on the same day the work is commenced, or if the *Township* offices are closed, no later than the start of the next working day. If the installation of new or additional plant is required for the emergency repair, a MC Application must be submitted to the *Public Works and Engineering Department* within 5 business days of the work commencement.

Service Drops

A RWP must be obtained from Public Works and Engineering prior to installing any service drop. Wherever possible, services and service connection to property line shall be designed and constructed directly in front of the customer being serviced, perpendicular to the roadway.

Road Work Permits

Prior to the commencement of work on the Right-of-Way, a RWP is to be obtained from the *Public Works and Engineering Department*. The issuance of a RWP to make an installation within the right-of-way does not relieve the Applicant of the responsibility to ensure that all affected parties are notified of the work and that the appropriate locates and clearances are obtained prior to commencing any installation.

Municipal Consent Application

Applications for MC shall be submitted through the *Township* website. The MC Application shall be completed in its entirety and shall include: one copy of the completed application form, one copy of the detailed design drawings, one copy of the required sign-offs from impacted parties, where applicable, and full *Fees*, where applicable. Applications can be submitted to the address below;

Attention; *Public Works and Engineering Department*
60 Snyder's Road West
Baden, ON N3A 1A1
engineering@wilmot.ca
(519) 634-8444 Ext. 9271

Changes to the Accepted Drawing

Any request for changes to an accepted MC drawing must be reviewed and accepted by the *Public Works and Engineering Staff*.

Cancelled Projects

The *Public Works and Engineering Department* must be notified of any cancelled projects for which a MC Application has been submitted or a MC has been issued.

Incomplete or Non-Approved Applications

MC Applications that are not in strict conformance with the MC Requirements, particularly with regards to the drawing standards, will not be accepted. Applications submitted without the full MC *Fee* will not be reviewed until the full MC *Fee* is received. In the event the application is not accepted, the Applicant will be contacted by the *Public Works and Engineering Staff* via e-mail to the address specified on the application. The Applicant will be advised of the general deficiencies of the application. If the Applicant does not address the deficiencies identified within two months time, the application form will be returned to the Applicant together with correspondence from *Public Works and Engineering Staff* indicating that a new application is required and any *Fees* have been forfeited and additional resubmission *Fees* are required.

Circulation and Sign-Offs

Prior to submitting an application, the Applicant is advised to circulate drawings of their proposed work to all utility companies, agencies and commissions that may be impacted by the work.

Application Review Period

Applications shall be submitted to the *Public Works and Engineering Department* at least 30 business days prior to the planned date of commencing the work. The date of application will be the date on which the complete and compliant application is received by Public Works and Engineering. Applications will normally be processed within 20 business days.

Acceptance Procedures

Upon completion of the MC application review, a copy of the accepted application will be emailed to the Applicants address as listed on the application. The issuance of a MC by the Township of Wilmot does not relieve the Applicant of the responsibility to ensure that the notification requirements of the procedures manual are properly carried out and that the appropriate locates, insurances and clearances etc. are obtained prior to acquiring an RWP and commencing the installation of the proposed work.

Review of Applications for Work in or under New Road Surfaces

To ensure the long-term sustainability of the *Township*'s infrastructure, the *Township* dictates a moratorium on all new or recently reconstructed streets. In the event an application is received for work in or under any infrastructure that is 15 years old or less, *Public Works and Engineering Staff* shall undertake a comprehensive review of the proposed working area, type and methods of construction to mitigate the potential negative impacts.

Disputes

In the event of any dispute regarding the review of a specific application, the Director of Public Works and Engineering shall make the final determination.

As-Constructed / As-Recorded Drawings

The Applicant shall submit within 90 days of project completion, as-constructed/as-recorded drawings in PDF and AutoCAD DWG format to the *Public Works and Engineering Department*.

Security Deposit

Township Staff shall be satisfied that the Applicant has posted sufficient *Security* with the Township of Wilmot as outlined within the terms of Municipal Access *Agreement*s, Franchise *Agreement*s or other *Township* requirements or as an individual *Security* deposit, to guarantee the performance by the Applicant of its obligations in connection with the proposed work prior to granting *Acceptance* for the MC.

10.1 Municipal Consent / Right of Way Work Permit Fees

Application Fee

The *Fee* for MC Applications and Right of Way work permit shall be in accordance with the Fees and Charges By-Law, per individual application. Applications with multiple drawings or extensive work shall be determined at the discretion of *Public Works and Engineering Staff's* standard practice.

Construction Fees

If required at the discretion of the *Township*, Construction *Fees* may be required by the *Township*. The *Fee* for MC Construction *Fees* shall be in accordance with the current Fees and Charges By-law, (Pavement degradation, inspection, *Security*, etc.) and will be estimated based on hourly rates for staff, vehicles and administrative *Fees*. The *Fee* will be estimated at the time of the MC review and will be required prior to MC *Acceptance* is granted.

Other Considerations

The Applicant shall comply with all applicable Legislation, *Township* and Region By-Laws policies and guidelines, *Township* Infrastructure Standards and Specifications, including but not limited to:

- Municipal Act
- Telecommunications Act
- Rulings by the Canadian Radio-television and Telecommunications Commission (CRTC)
- Rulings by the Ontario Energy Board (OEB)
- Right-of-way Work Permit
- Tree Protection and Preservation

Municipal Consent Manual

For a complete description of the MC process, and all requirements, please see the *Township*'s Municipal Consent Requirements Manual.

Section 11 – Standard Drawings

DWG #	Description
1	6.0m or Wider Maintenance Access Detail
2	3.0m Walkway Detail
3	4.0m Maintenance Access Detail
4	6.0m Wide Maintenance Access Servicing Layout
5	Maintenance Accessway Swing Gate Detail
6	Cul-De-Sac Layout Detail
7	Asphalt Mainenance Road Detail
8	Boulevard Tree Planting Detail
9	Construction Mud Mat Detail
10	Driveway Entrance Residental (Rural) Detail
11	Unassumed Road Sign Detail
12	Street Name and Traffic Control Sign Detail
13	25mm Blow Off Detail
14	Typical 50mm Watermain on Cul-De-Sac Detail
15	Sample Station Detail
16	Fire Reservoir Detail

17	Frost Collar Detail
18	Lot Servicing Location Detail
19	Stone Dust Trail Detail
20	Chainlink Fence Walkway Block Detail
21	Standard Hydrant Installation Detail
22	Standard As Recorded Measurement for Watermain Assets
23	Standard As Recorded Measurement for Watermain Assets (2)
24	Cross Section of Grass Swale
25	Urban Lot Grading Type ‘A’
26	Urban Lot Grading Type ‘B’
27	Urban Lot Grading Type ‘C’
28	Urban Lot Grading Type ‘D’
29	Typical Watermain Offset Under Sewers
30	Weeping Tile Connection in Minimum Ground Water Areas
31	Standard Drop Curb & Concrete Driveway Ramp
32	Storm Sewer Easement Detail
33	Survey Benchmark Monument
34	20.0m Local Road ROW

35	20.0 Minor Collector ROW
36	23.0 Minor Collector ROW
37	26.0 Major Collector ROW
38	Community Mailbox (CMB) Detail
39	Industrial Commercial Driveway Entrance Detail
40	Stormwater Management Area Sign Detail
41	Typical Water Meter Installation Detail
42	Remote Mounting Post Detail

Link – www.wilmot/.....

Section 12 - Appendix

Water Meter Policy – www.wilmot/....

Grading letter - www.wilmot/....

Schedule D - www.wilmot/....

Suvey Monument Record Sheet - www.wilmot/....

Municipal Consent Manual – www.wilmot/...

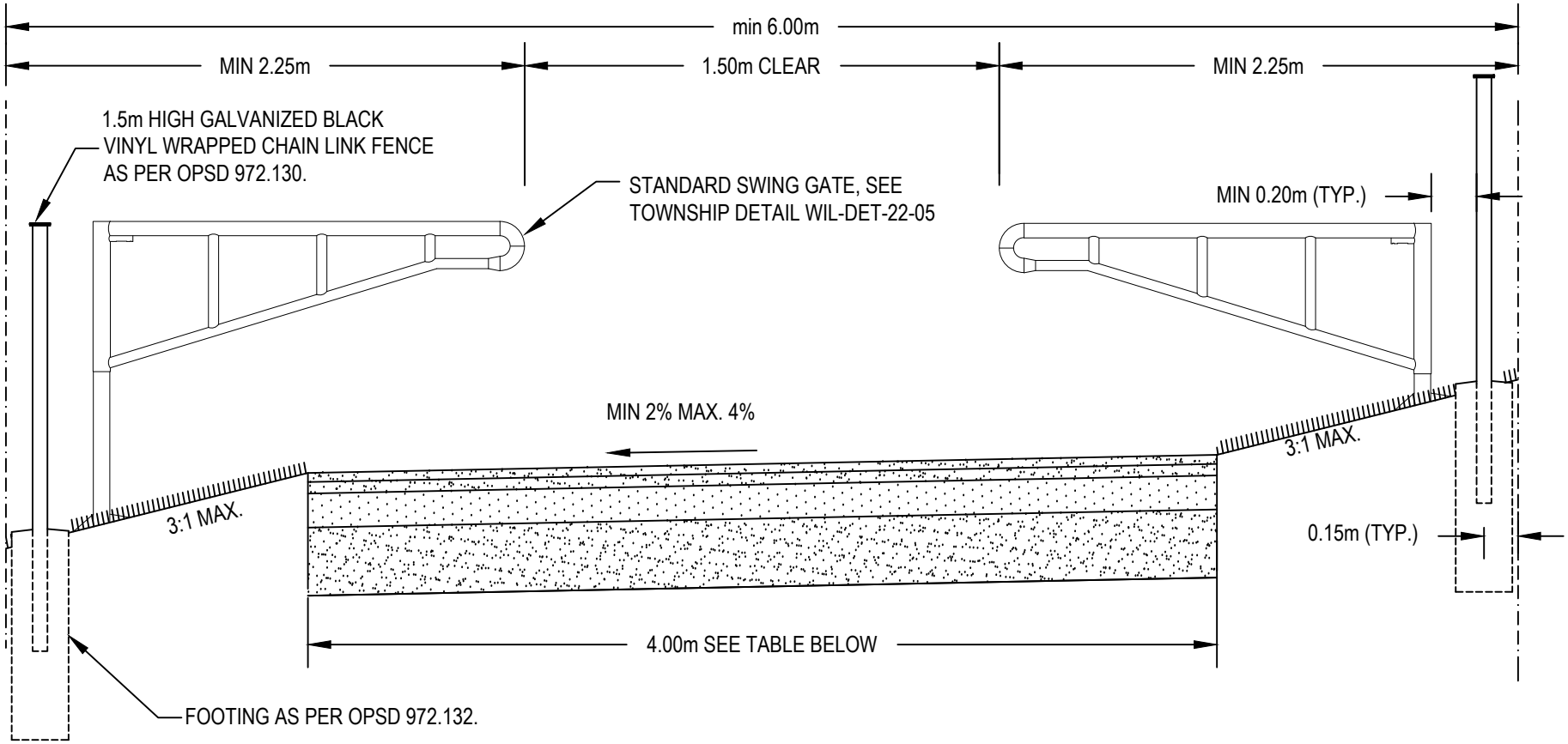

DESCRIPTION	WIDTH	GRAN 'B'	GRAN 'A'	SURFACE ASPHALT	BASE ASPHALT	No. OF GATES
6.0m MAINTENANCE ACCESS	4.0m	300mm	150mm	40mm - HL3	50mm - HL4	2
8.0m MAINTENANCE ACCESS	4.0m	300mm	150mm	40mm - HL3	50mm - HL4	2

NOTES:

1. GRANULAR 'A' & 'B' BEDDING SHALL BE COMPACTED TO 100% SPD. SUBGRADE SHALL BE COMPACTED TO 98% SPD.
2. IF SERVICES PRESENT SEE TOWNSHIP DETAIL WIL-DET-22-04.
3. SWING GATE OFFSET FROM ROW PROPERTY LINE TO BE 2.0m. AS SHOWN ON DETAIL WIL-DET-22-03
4. ANY OVERLAND FLOW FROM ROW IS TO BE CONTAINED IN MAINTENANCE ACCESS.

6.0m OR WIDER MAINTENANCE ACCESS DETAIL

TOWNSHIP OF WILMOT
PUBLIC WORKS AND ENGINEERING DEPARTMENT

DATE: FEBRRUARY 2022

SCALE: NTS

DWG No.: WIL-DET-22-01 | REV: 0

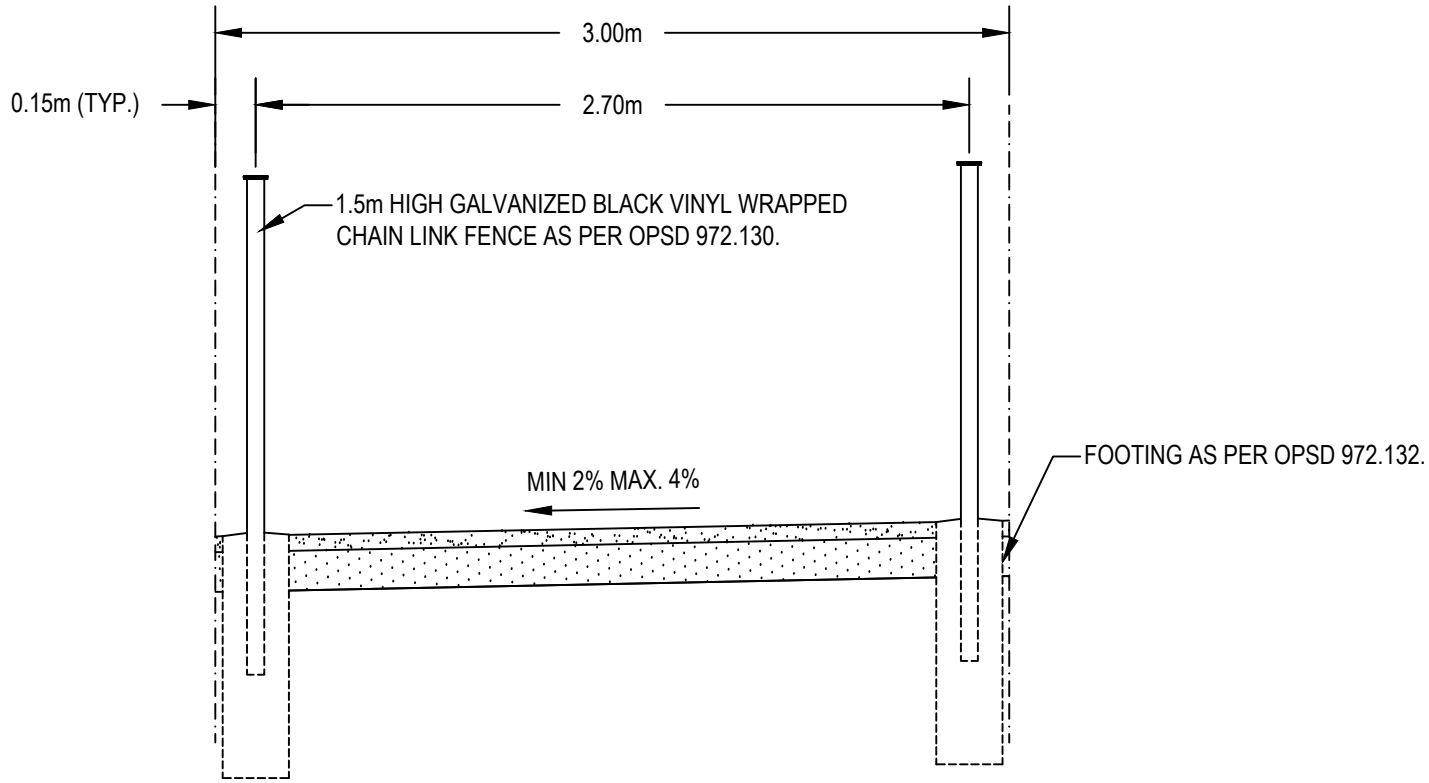

DESCRIPTION	WIDTH	GRAN 'B'	GRAN 'A'	CONCRETE
WALKWAY	3.0m	-	200mm	150mm - 32MPa

NOTES:

1. GRANULAR 'A' & 'B' BEDDING SHALL BE COMPACTED TO 100% SPD. TRAIL SUBGRADE SHALL BE COMPACTED TO 98% SPD.

3.0m WALKWAY DETAIL

TOWNSHIP OF WILMOT
PUBLIC WORKS AND ENGINEERING DEPARTMENT

DATE: FEBRUARY 2022

SCALE: NTS

DWG No.: WIL-DET-22-02 | REV: 0

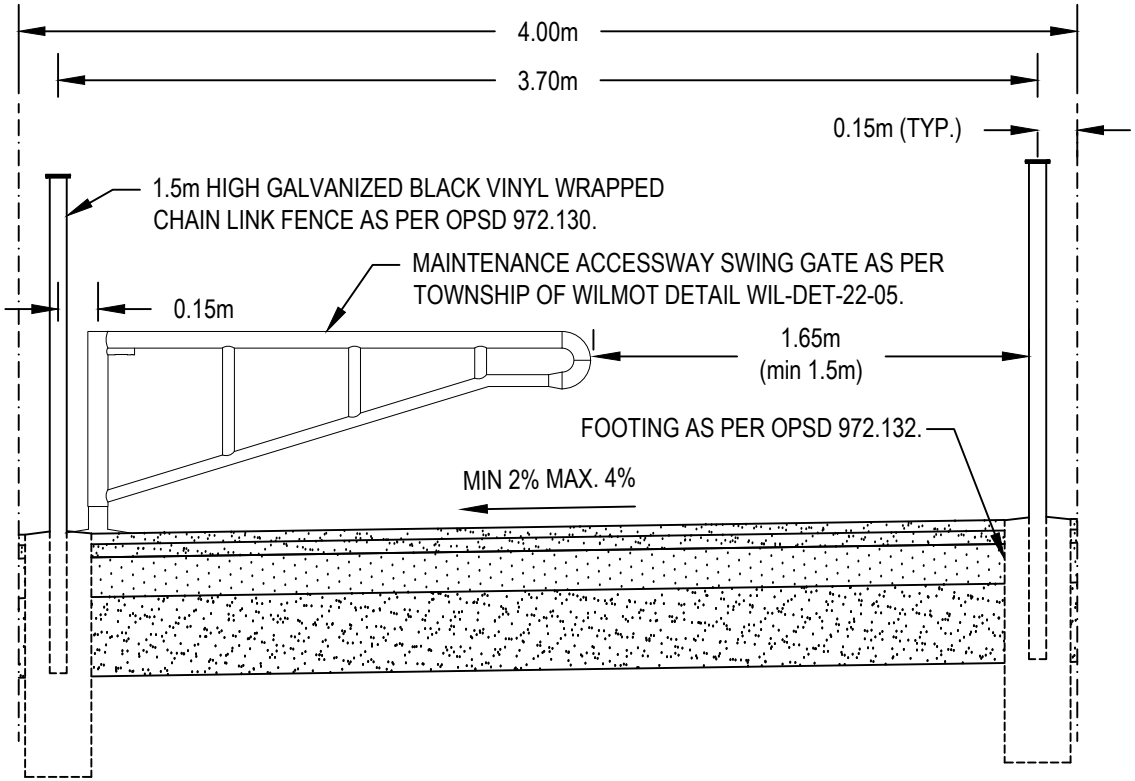

DESCRIPTION	WIDTH	GRAN 'B'	GRAN 'A'	ASPHALT
MAINTENANCE ACCESS	4.0m	300mm	150mm	40mm - HL3 50mm - HL4

NOTES:

1. ASPHALT SHALL BE COMPACTED TO 95% SPD. GRANULAR 'A' & 'B' BEDDING SHALL BE COMPACTED TO 100% SPD. SUBGRADE SHALL BE COMPACTED TO 95% SPD.

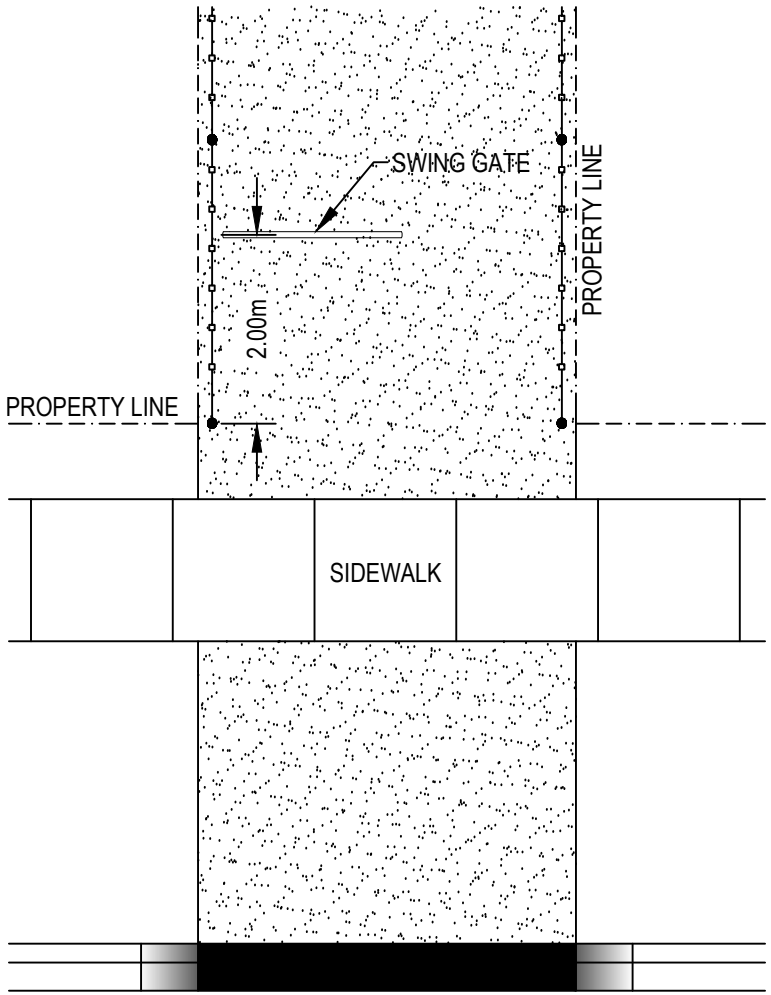

PLAN VIEW

4.0m MAINTENANCE ACCESS DETAIL

TOWNSHIP OF WILMOT
PUBLIC WORKS AND ENGINEERING DEPARTMENT

DATE: FEBRUARY 2022

SCALE: NTS

DWG No.: WIL-DET-22-03 | REV: 0

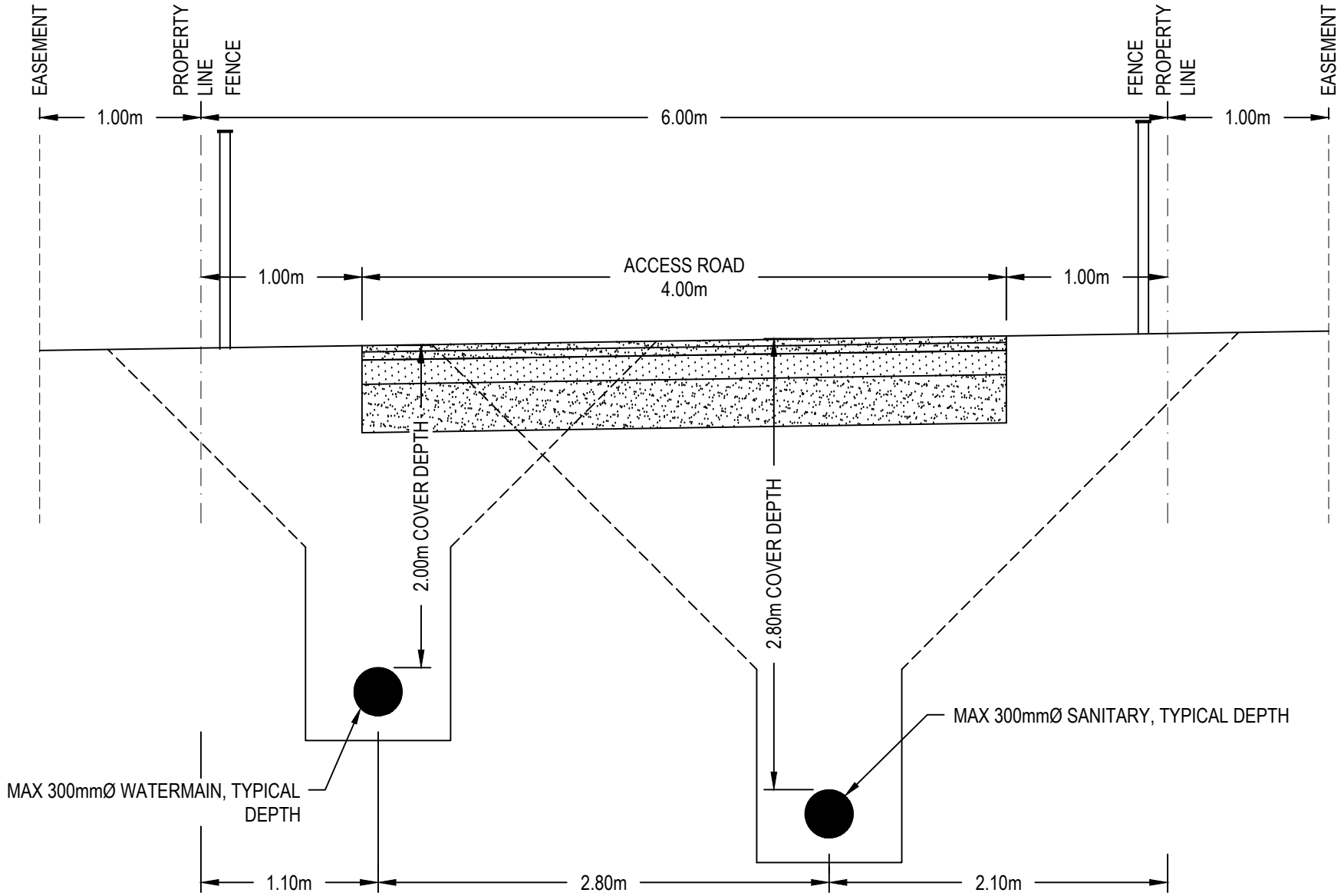

NOTES:

1. IF STORM SEWER ONLY, THEN 1 UTILITY PERMITTED CENTERED IN ACCESS ROAD BLOCK.
2. 6.0m WIDE ACCESS ROAD BLOCK WITH 1.0m EASEMENT ON EITHER SIDE OF BLOCK (WORKING EASEMENT).
3. DETAIL TO BE READ IN CONJUNCTION WITH TOWNSHIP DETAIL WIL-DET-22-01.

6.0m WIDE MAINTENANCE ACCESS SERVICING LAYOUT

TOWNSHIP OF WILMOT
PUBLIC WORKS AND ENGINEERING DEPARTMENT

DATE: FEBRUARY 2022

SCALE: NTS

DWG No.: WIL-DET-22-04 | REV: 0

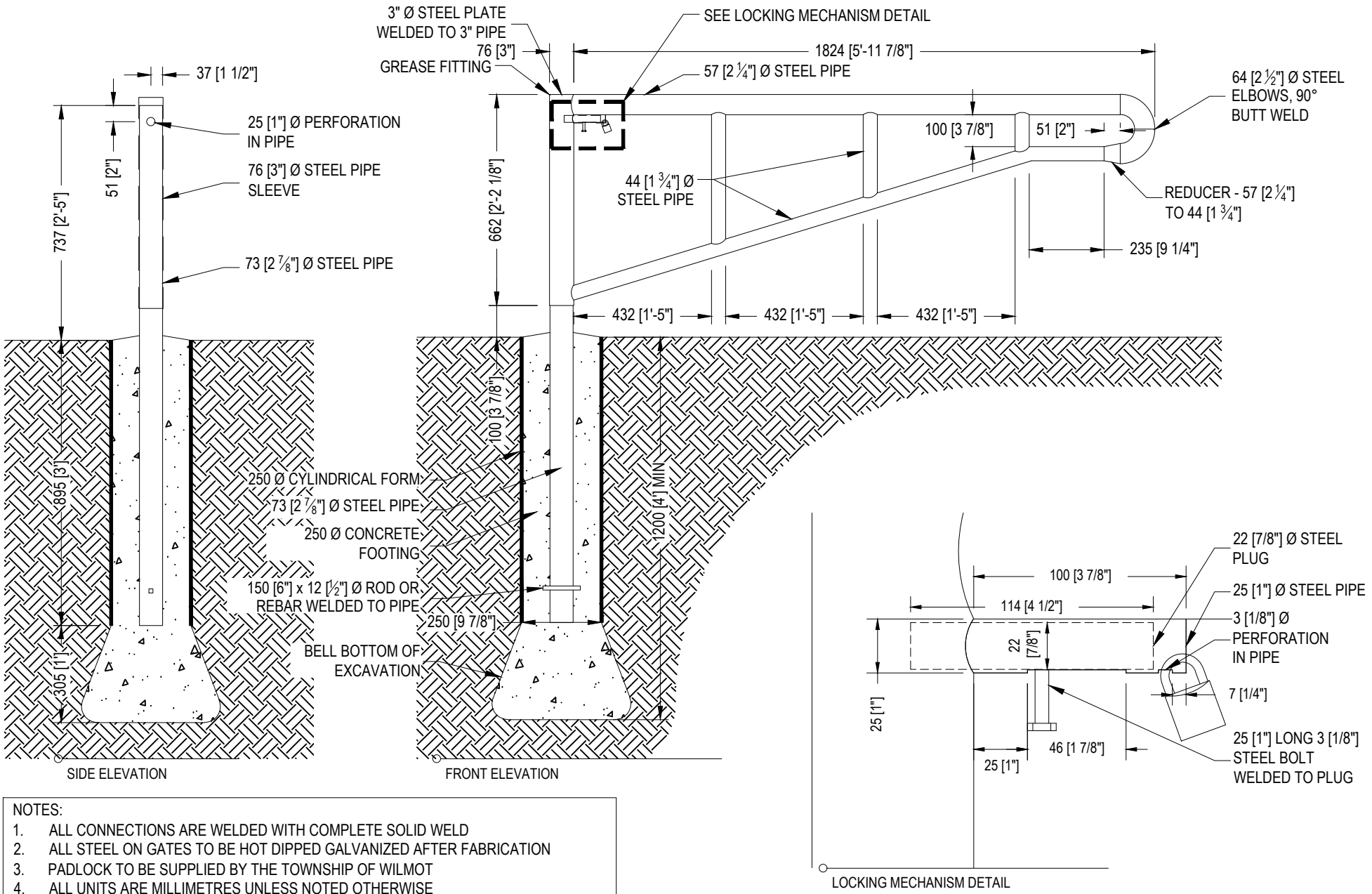

NOTES:
1. ALL CONNECTIONS ARE WELDED WITH COMPLETE SOLID WELD
2. ALL STEEL ON GATES TO BE HOT DIPPED GALVANIZED AFTER FABRICATION
3. PADLOCK TO BE SUPPLIED BY THE TOWNSHIP OF WILMOT
4. ALL UNITS ARE MILLIMETRES UNLESS NOTED OTHERWISE

MAINTENANCE ACCESSWAY SWING GATE DETAIL

TOWNSHIP OF WILMOT
PUBLIC WORKS AND ENGINEERING DEPARTMENT

DATE: FEBRUARY 2022

SCALE: NTS

DWG No.: WIL-DET-22-05 | REV: 0

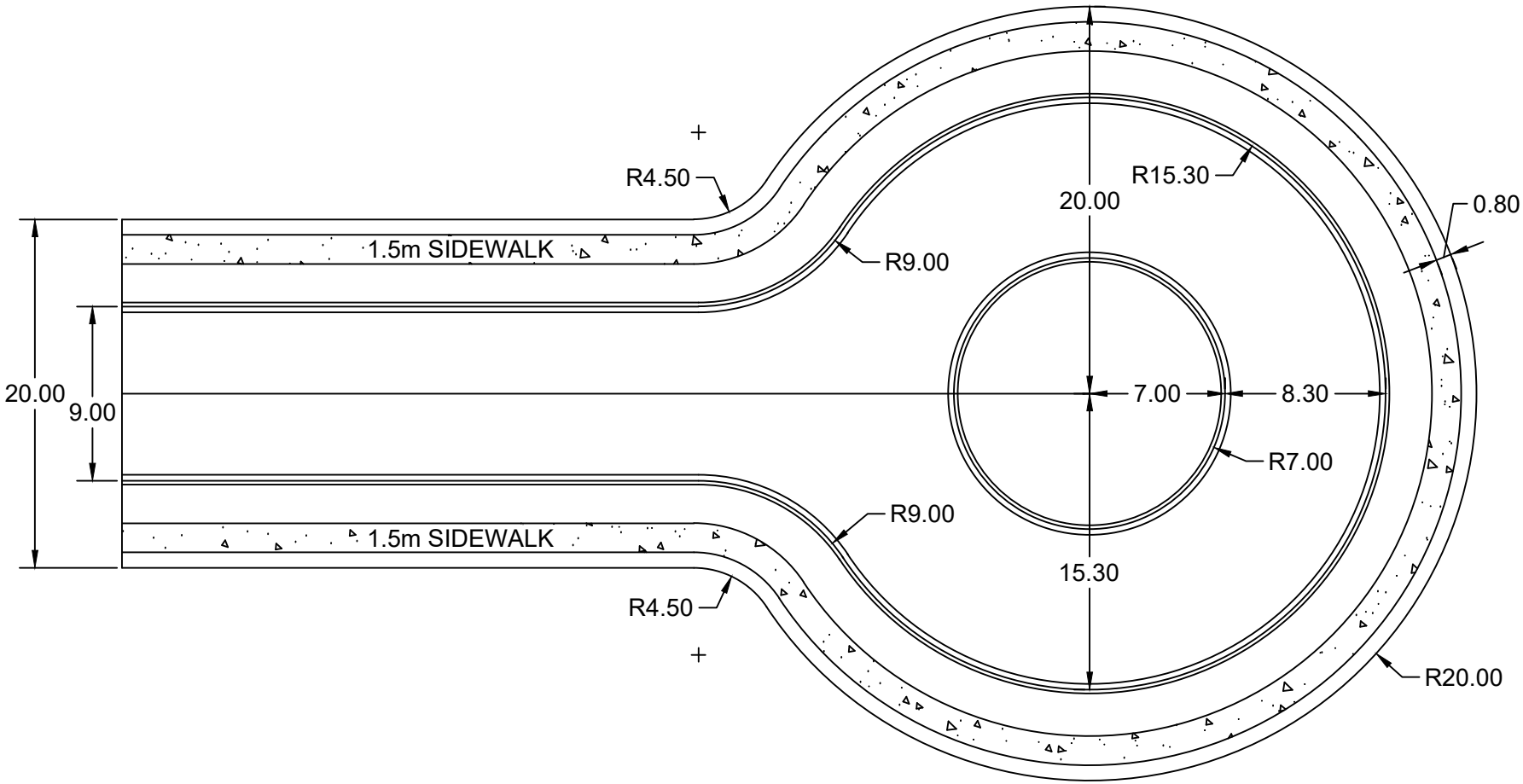

CUL-DE-SAC LAYOUT DETAIL

TOWNSHIP OF WILMOT
PUBLIC WORKS AND ENGINEERING DEPARTMENT

DATE: FEBRUARY 2022

SCALE: 1:300 @ 8.5 x 11

DWG No: WIL-DET-22-06 | REV: 0

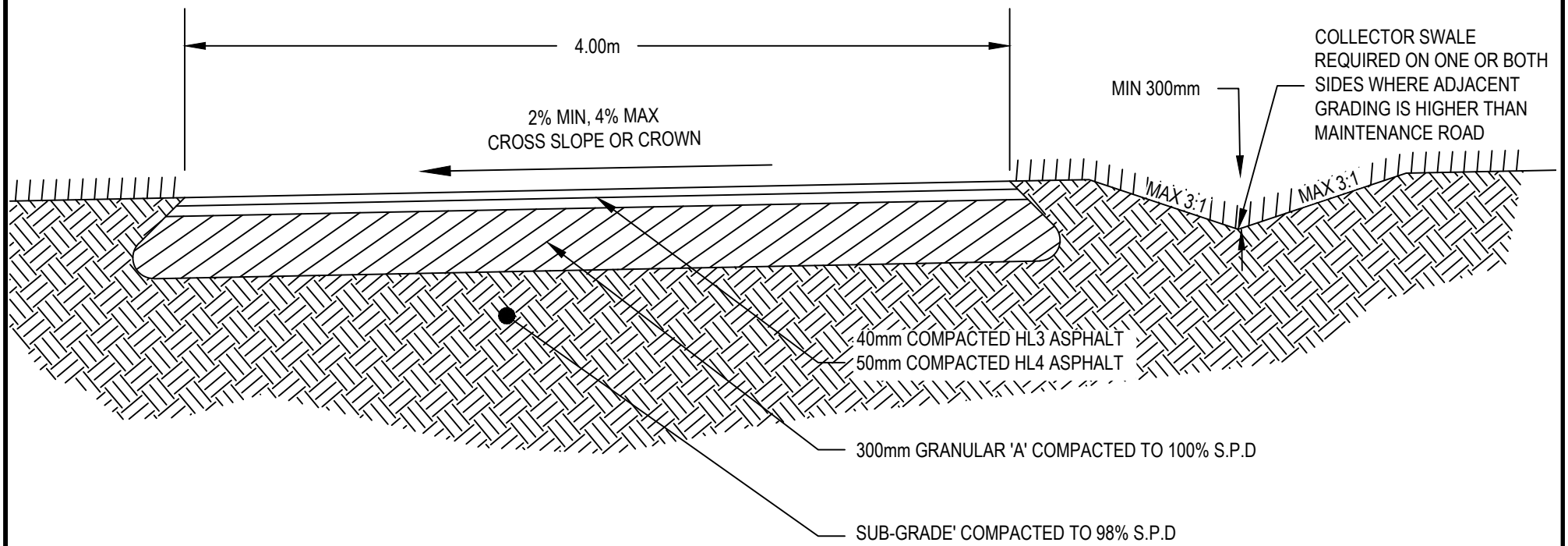

NOTE:
EXCAVATE TO A MINIMUM DEPTH OF 390mm OR END OF TOPSOIL LAYER, TO A MAXIMUM DEPTH OF 840mm. FILL ADDITIONAL EXCAVATED TOPSOIL WITH COMPACTED GRANULAR 'B' TO A MAXIMUM DEPTH OF 450mm.

ASPHALT MAINTENANCE ROAD DETAIL

TOWNSHIP OF WILMOT
PUBLIC WORKS AND ENGINEERING DEPARTMENT

DATE: FEBRUARY 2022

SCALE: NTS

DWG No.: WIL-DET-22-07 | REV: 0

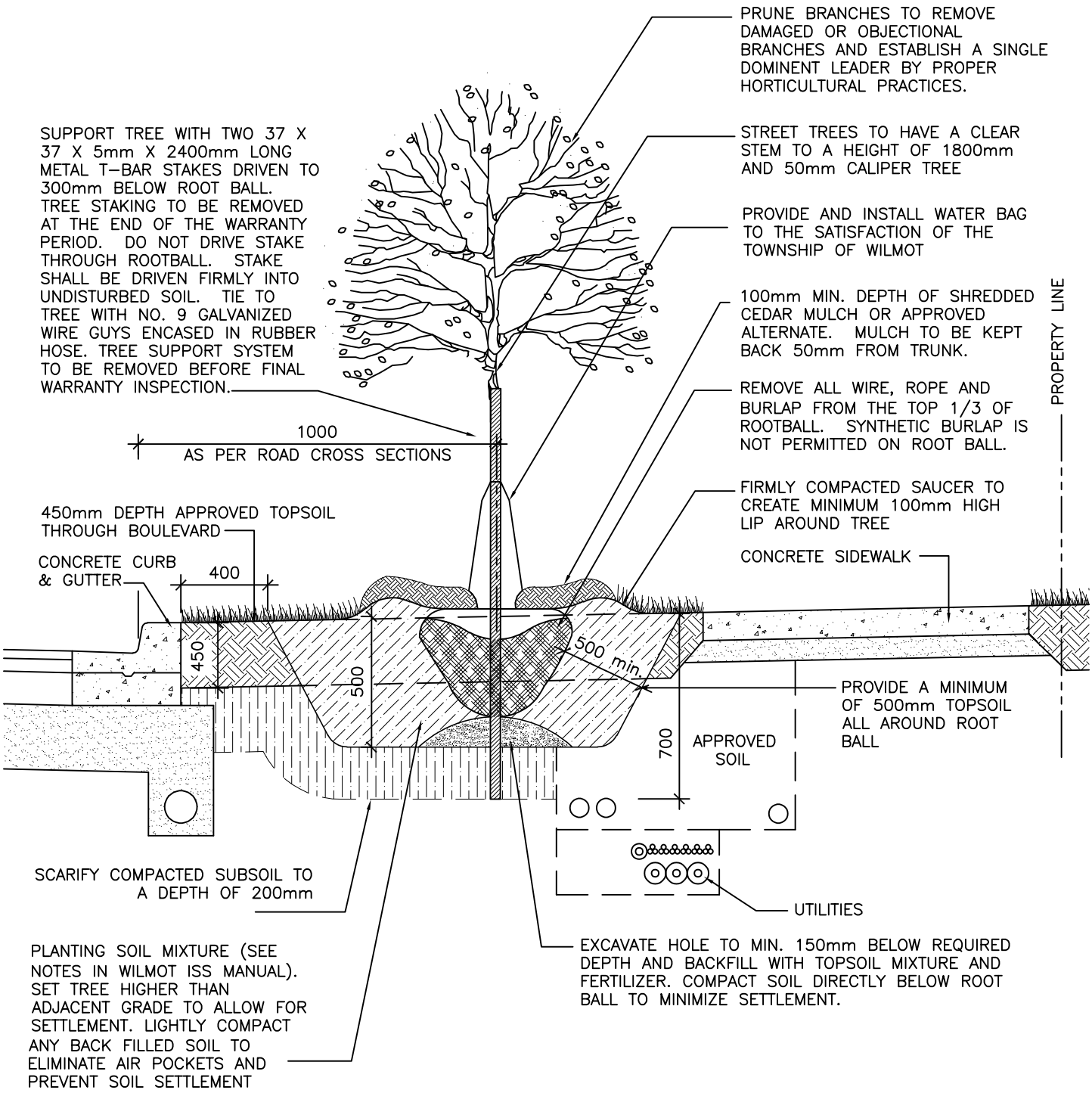

BOULEVARD TREE PLANTING DETAIL

TOWNSHIP OF WILMOT
PUBLIC WORKS AND ENGINEERING DEPARTMENT

DATE: FEBRUARY 2022	
SCALE: NTS	
DWG No. WIL-DET-22-08	REV: 0

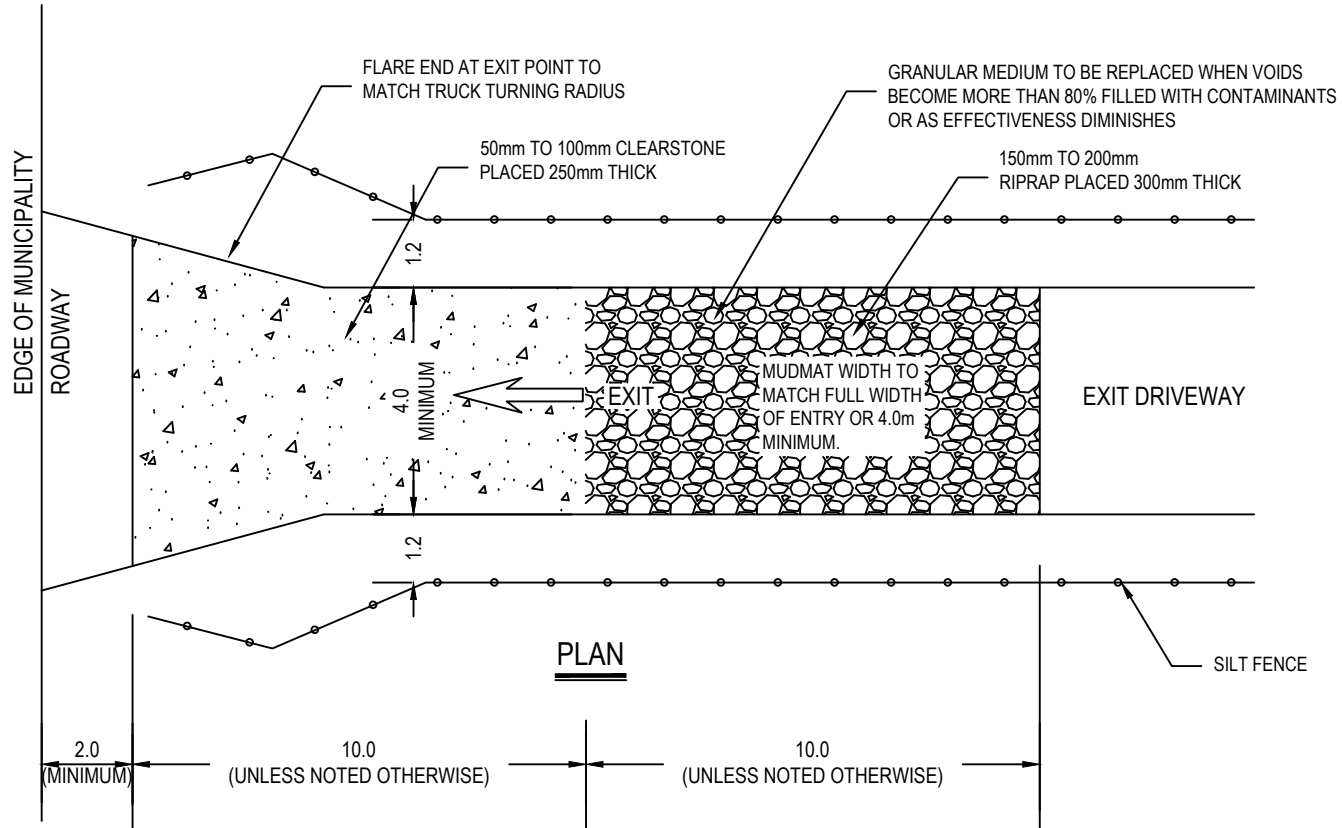

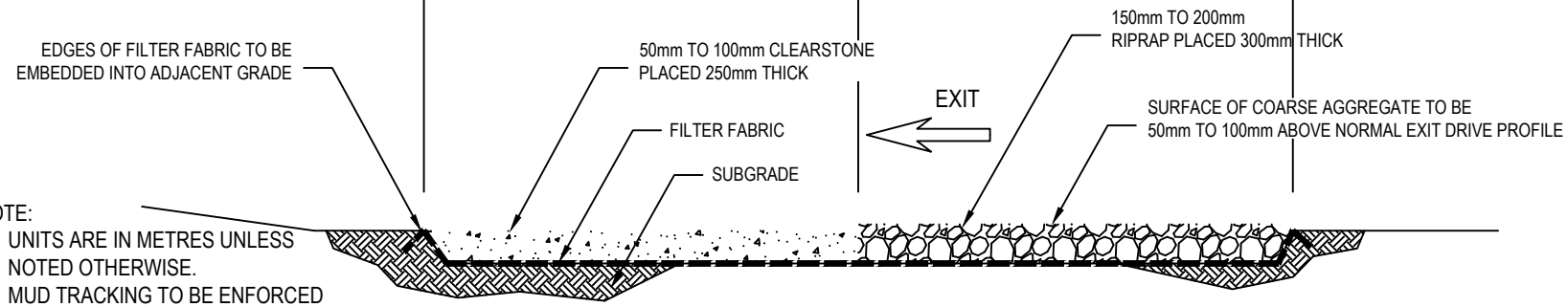

NOTE:
1. UNITS ARE IN METRES UNLESS NOTED OTHERWISE.
2. MUD TRACKING TO BE ENFORCED UNDER TOWNSHIP BY LAW
3. A LETTER OF CREDIT AND/OR CASH DEPOSIT TO BE COLLECTED BY THE TOWNSHIP

CONSTRUCTION MUD MAT DETAIL

TOWNSHIP OF WILMOT
PUBLIC WORKS AND ENGINEERING DEPARTMENT

DATE: FEBURARY 2022

SCALE: NTS

DWG No.: WIL-DET-22-09 | REV: 0

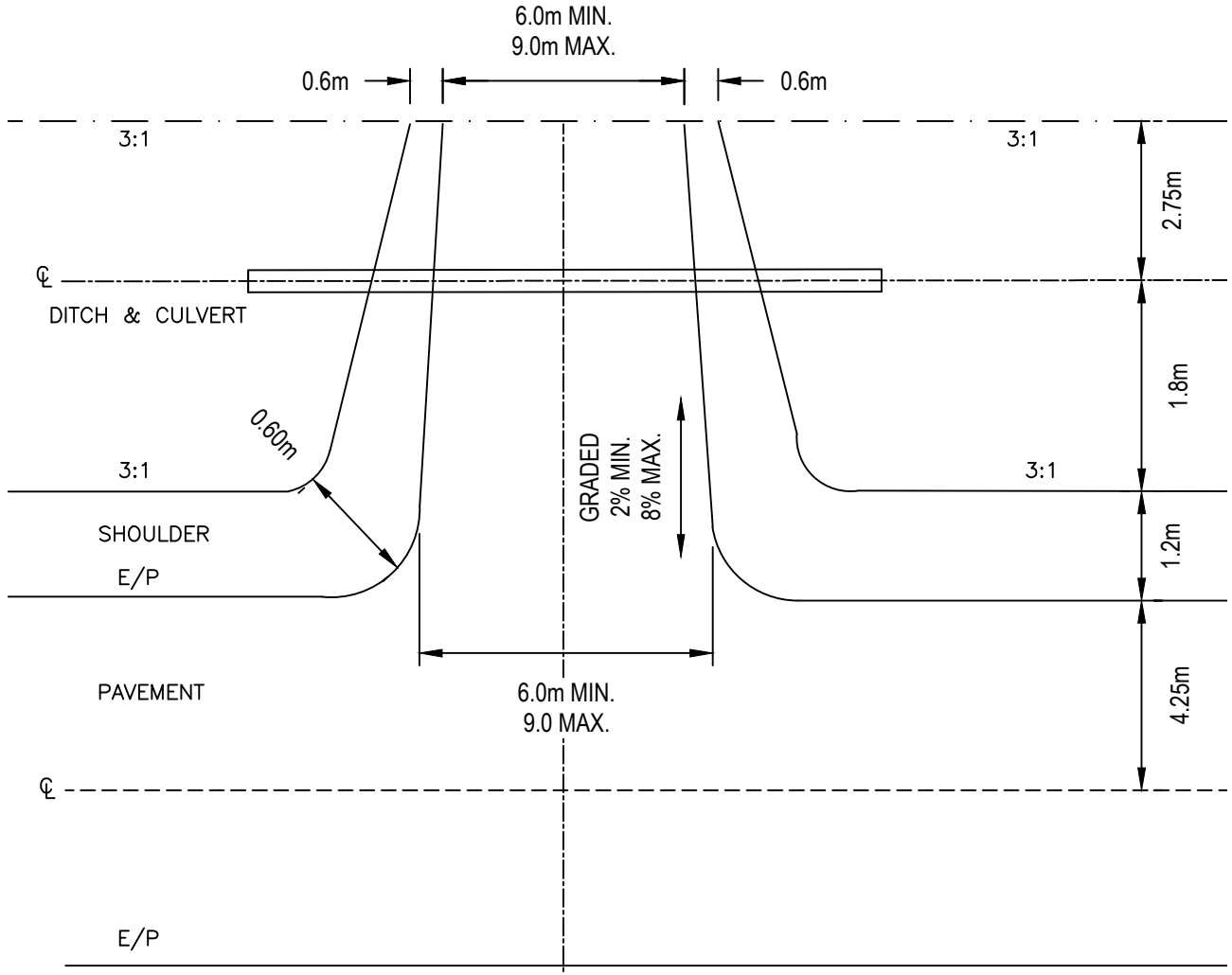

SINGLE DRIVEWAY

NOTES:

1. DRIVEWAY CROSS–SECTION TO BE:
   50mm ASPHALT
   150mm GRANULAR 'A'
   150mm GRANULAR 'B'
2. DRIVEWAY CULVERTS TO BE 400mm DIAMETER CMP MINIMUM, 1% SLOPE AND MINIMUM 0.30m COVER AND SET 50mm BELOW DITCH GRADES.
3. MINIMUM LENGTH OF CULVERT TO BE 12m.
4. FOR DOUBLE DRIVEWAY AND/OR DRIVEWAY OFF A TOWNSHIP ROAD. PAVEMENT TO BE AT STREET LINE 6m. AT EDGE OF PAVEMENT 7.50m AND GRAVEL SHOULDERS TO REMAIN THE SAME. CULVERT LENGTHS TO BE 14m.
5. INCREASE TO THE ABOVE MINIMUM STANDARDS TO BE APPROVED BY THE TOWNSHIP ENGINEER.

DRIVEWAY ENTRANCE RESIDENTIAL (RURAL) DETAIL

TOWNSHIP OF WILMOT
PUBLIC WORKS AND ENGINEERING DEPARTMENT

DATE: FEBRRUARY 2022

SCALE: NTS

DWG No.: WIL-DET-22-10 | REV: 0

NOTES:

1. THIS SIGN IS TO BE INSTALLED AND MAINTAINED BY THE DEVELOPER UNTIL FINAL ACCEPTANCE OF SURFACE WORKS IS ISSUED BY THE TOWNSHIP.
2. SIGN IS TO BE ON HEAVY GAUGE ALUMINUM AND FASTENED TO POST WITH STAINLESS STEEL HARDWARE.
3. SIGN IS TO HAVE A HIGH INTENSITY REFLECTIVE COATING AND MEET M.U.T.C. SPECIFICATIONS.
4. SIGN SHALL HAVE WHITE BACKGROUND WITH BLACK LETTERS.
5. ALL SIGN LOCATIONS TO BE REVIEWED BY THE TOWNSHIP.
6. SIGNS TO BE LOCATED AT ALL ENTRANCES TO DEVELOPMENT PHASES.

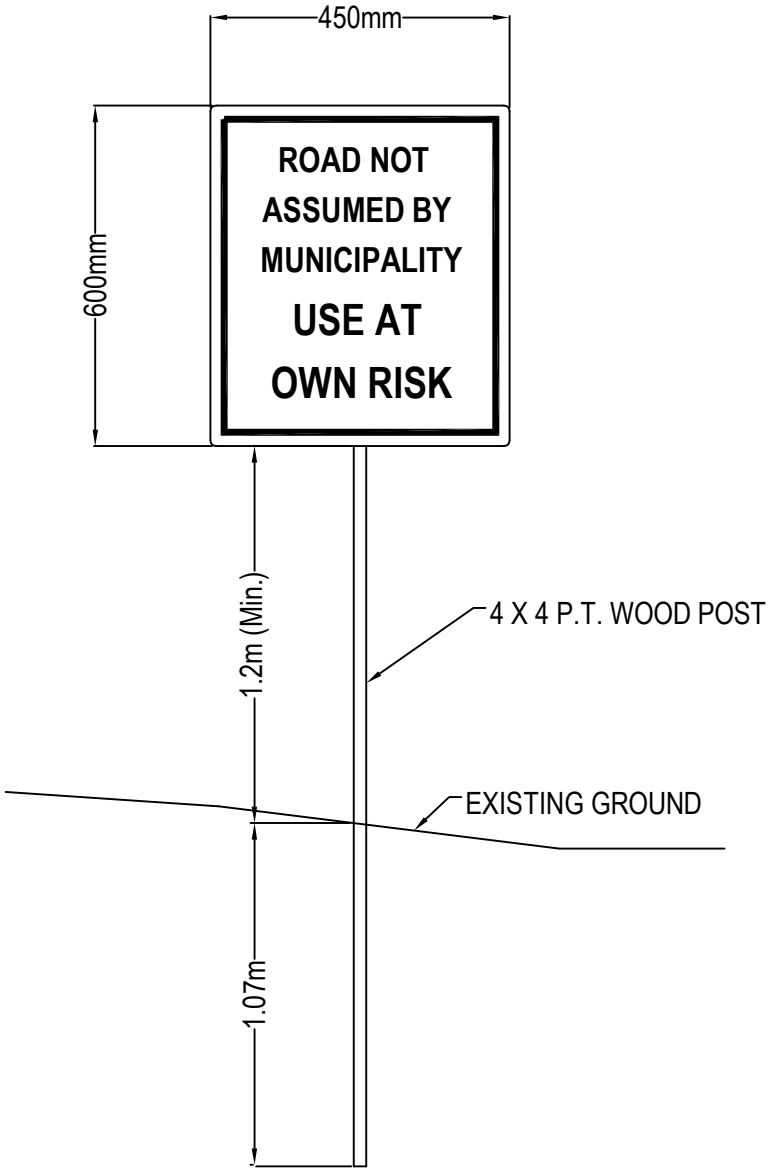

UNASSUMED ROAD SIGN DETAIL		TOWNSHIP OF WILMOT PUBLIC WORKS AND ENGINEERING DEPARTMENT
		DATE: FEBRUARY 2022
		SCALE: NTS
		DWG No. WIL-DET-22-11 / REV: 0

NOTES:

1. TRAFFIC CONTROL SIGN POST TO BE 80,000 PSI GALVANIZED "U" FLANGE POST BOLTED WITH STAINLESS STEEL HARDWARE TO A 1.20m GALVANIZED ANCHOR POST.
2. ALL SIGNS ARE TO BE ON HEAVY GAUGE ALUMINUM AND FASTENED TO POST WITH STAINLESS STEEL HARDWARE.
3. ALL SIGNS ARE TO HAVE A HIGH INTENSITY REFLECTIVE COATING AND MEET M.U.T.C. SPECIFICATIONS.
4. STREET NAME SIGNS ARE WHITE 100mm HIGH LETTERING ON A 150mm GREEN TAB.
5. ALL SIGN LOCATIONS TO BE REVIEWED BY THE TOWNSHIP.
6. SUBDIVIDER TO COVER THE COST OF TOWNSHIP OPERATIONS STAFF/AGENTS FOR INSTALLATION AND REFLECTIVITY TESTING AS PER MINIMUM MAINTENANCE STANDARDS.

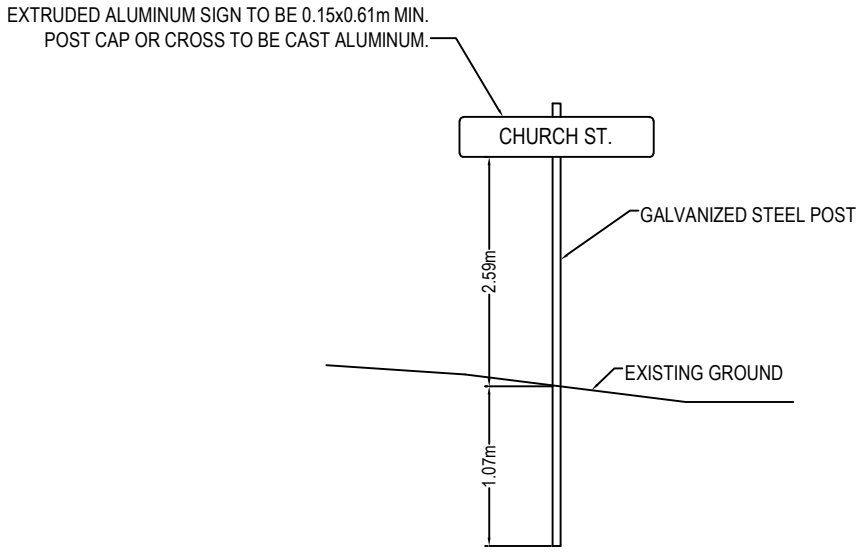

STREET NAME SIGN

N.T.S.

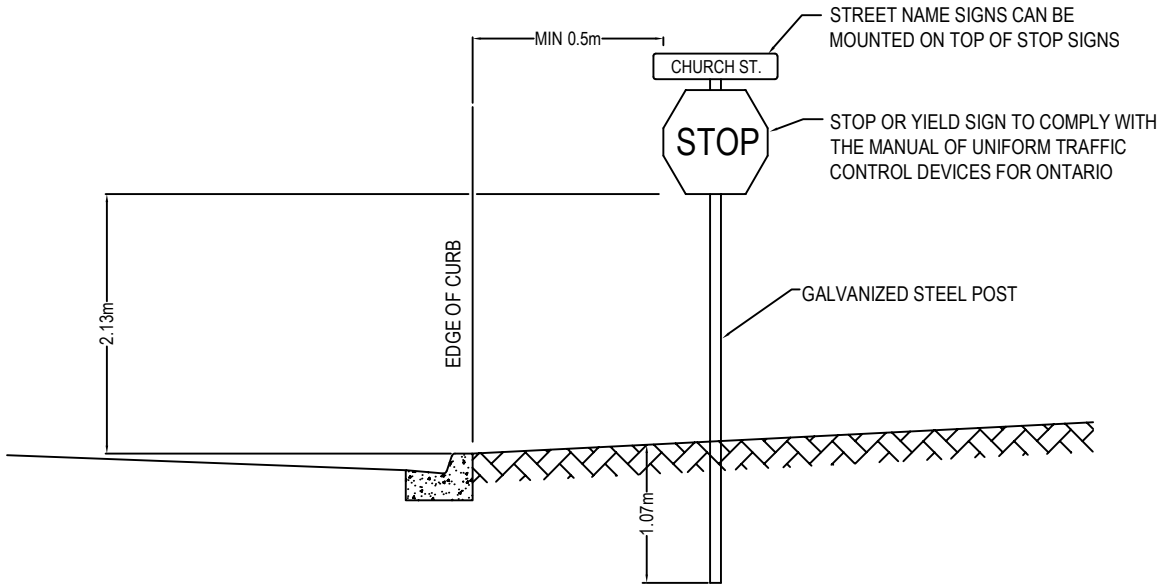

TRAFFIC CONTROL SIGN

N.T.S.

STREET NAME SIGN AND TRAFFIC CONTROL SIGN DETAIL		TOWNSHIP OF WILMOT PUBLIC WORKS AND ENGINEERING DEPARTMENT
		DATE: FEBRUARY 2022
		SCALE: NTS
		DWG No. WIL-DET-22-12 / REV: 0

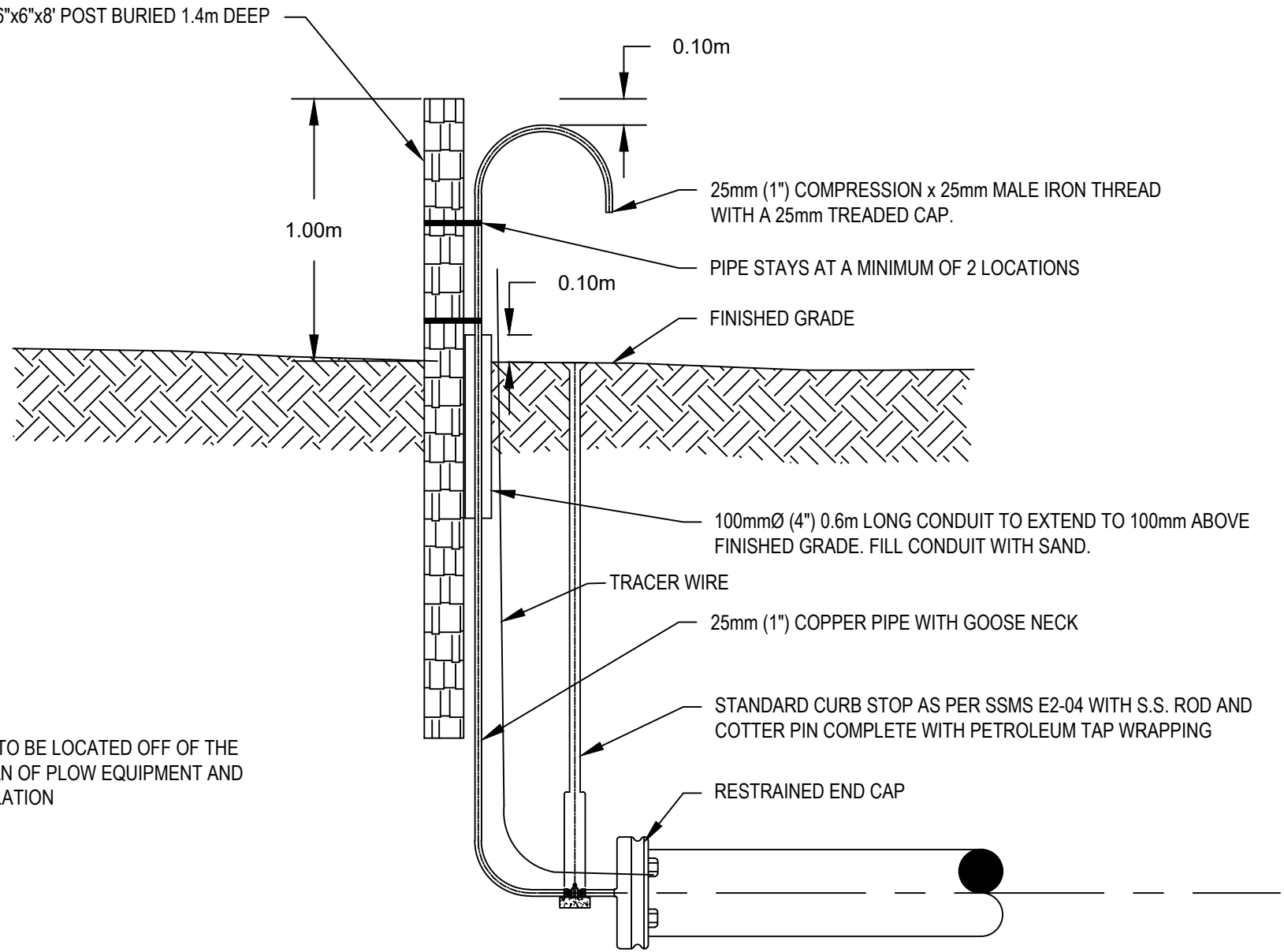

NOTE:
POST AND 25mm PIPE TO BE LOCATED OFF OF THE ROAD EDGE AND CLEAN OF PLOW EQUIPMENT AND SNOW BANK ACCUMULATION

25mm (1") BLOW OFF DETAIL

TOWNSHIP OF WILMOT
PUBLIC WORKS AND ENGINEERING DEPARTMENT

DATE: FEBRUARY 2022

SCALE: NTS

DWG No.: WIL-DET-22-13 | REV: 0

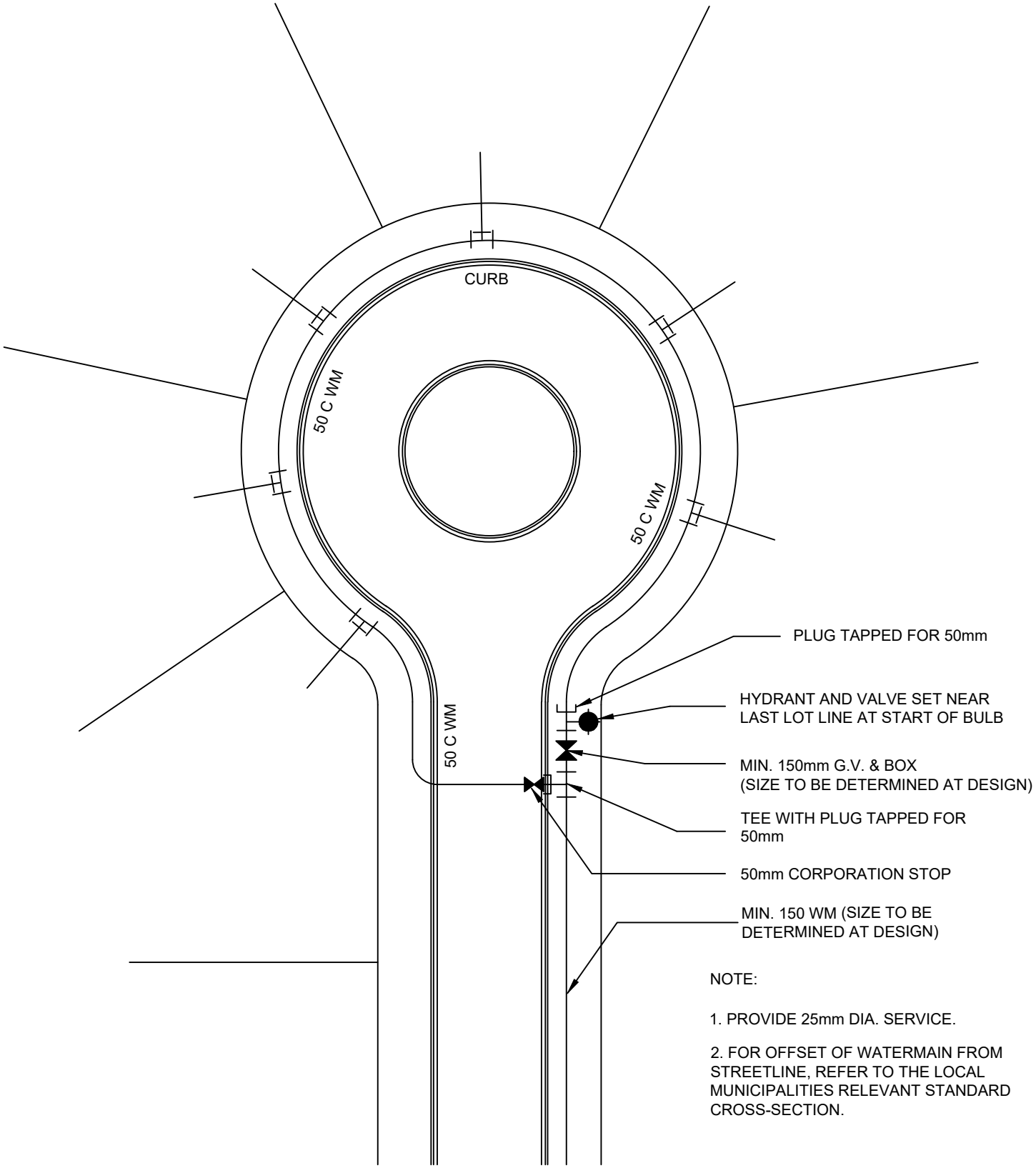

NOTE:

1. PROVIDE 25mm DIA. SERVICE.

2. FOR OFFSET OF WATERMAIN FROM STREETLINE, REFER TO THE LOCAL MUNICIPALITIES RELEVANT STANDARD CROSS-SECTION.

TYPICAL 50mm WATERMAIN ON CUL-DE-SAC DETAIL

TOWNSHIP OF WILMOT
PUBLIC WORKS AND ENGINEERING DEPARTMENT

DATE: FEBRUARY 2022

SCALE: NTS

DWG No.: WIL-DET-22-14 | REV: 0

NOTES:
SAMPLING STATION SHALL HAVE A 13mm (1/2") S.S. WATERWAY (NO LEAD).

TO PUMP STANDING WATER FROM THE UNIT AFTER USE A 10mm (3/8") 316 S.S. VENT TUBE IS TO BE USED.

THE ENCLOSURE SHALL BE SCHEDULE 40 PVC PIPE WITH LOCKABLE ACCESS DOOR.

THE ENCLOSURE SHALL PROTECT ALL COMPONENTS FROM CORROSIVE SOIL AND GROUNDWATER.

ALL WORKING PARTS SHALL BE REMOVABLE WITHOUT DIGGING OR ANY TOOLS.

EQUIPPED WITH A 25mm (1") FIP FOR CONNECTION TO THE WATERMAIN.

HOLES ARE TO BE DRILLED NEAR THE BOTTOM OF THE SAMPLE STATION AND WASHED STONE AND FILTER FABRIC PLACED AROUND THE BASE OF THE SAMPLE STATION.

ALL METALLIC FITTINGS ARE TO BE CATHODIC PROTECTED WITH PETROLATUM TAPE SYSTEM PER DGSSMS C.2.12.

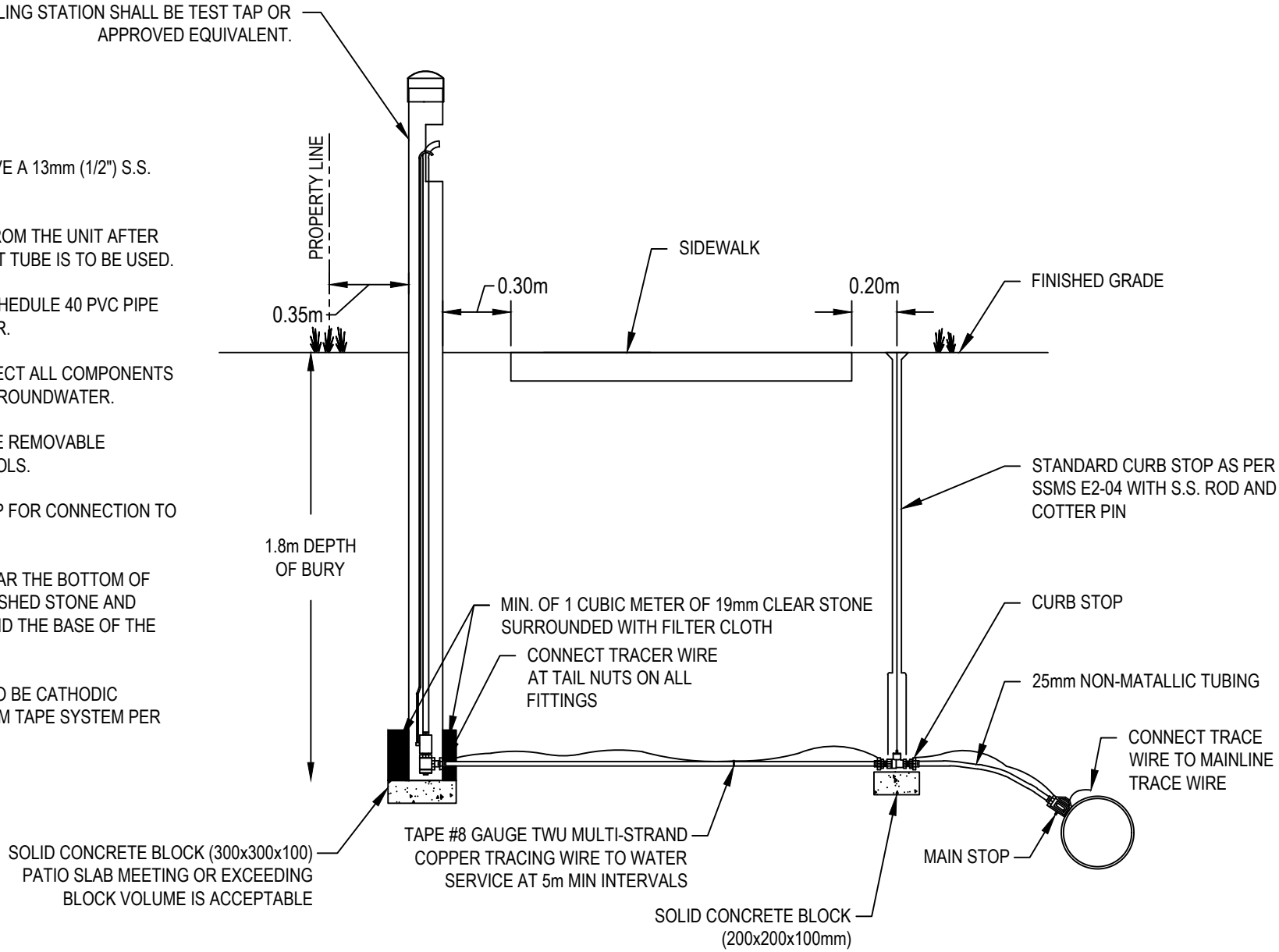

SAMPLE STATION DETAIL

TOWNSHIP OF WILMOT
PUBLIC WORKS AND ENGINEERING DEPARTMENT

DATE: FEBRUARY 2022

SCALE: NTS

DWG No.: WIL-DET-22-15 | REV: 0

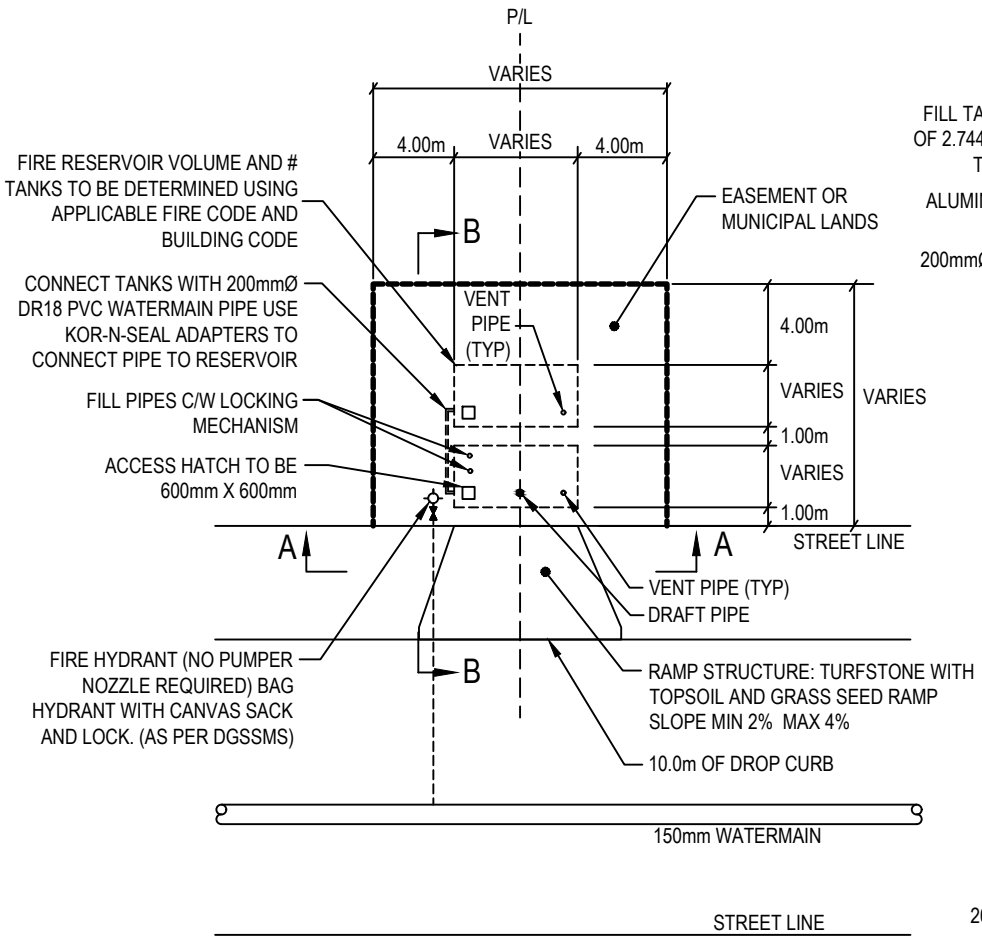

FIRE RESERVOIR DETAIL

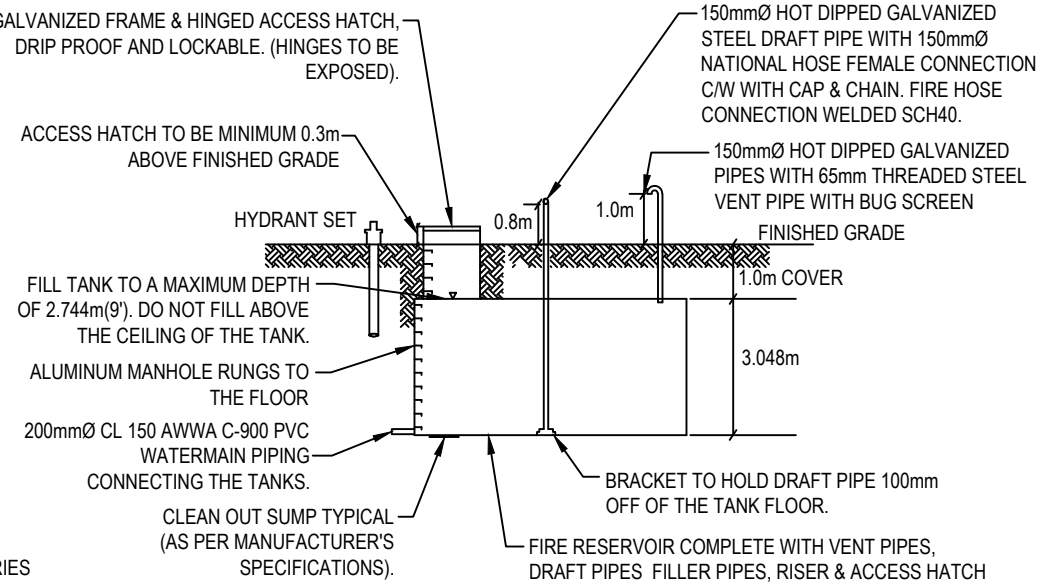

SECTION A-A

N.T.S.

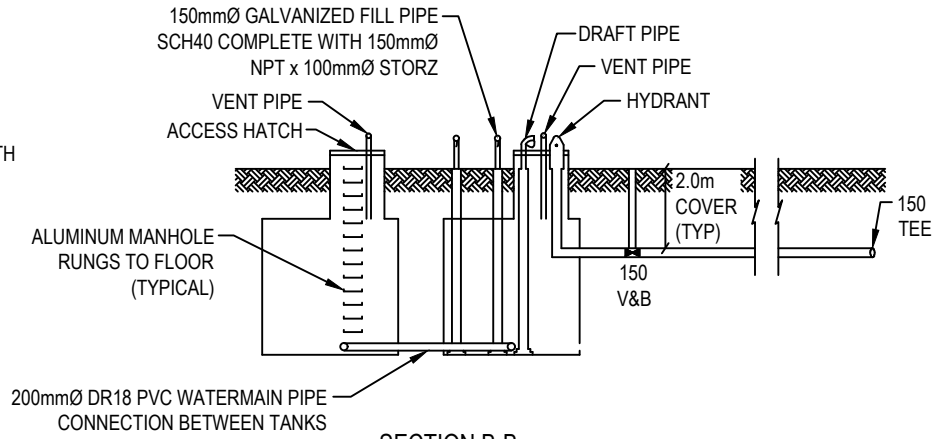

SECTION B-B

N.T.S.

NOTE:
WHEN TANKS ARE LOCATED IN AREAS WITH HIGH GROUND WATER TABLE, ENGINEER SHALL PROVIDE BOUANCY CALCULATIONS TO THE TOWNSHIP CONFIRMING ANTI FLOATATION RECOMMENDATIONS.

FIRE RESERVOIR DETAIL

TOWNSHIP OF WILMOT
PUBLIC WORKS AND ENGINEERING DEPARTMENT

DATE: FEBRUARY 2022

SCALE: NTS

DWG No.: WIL-DET-22-16 | REV: 0

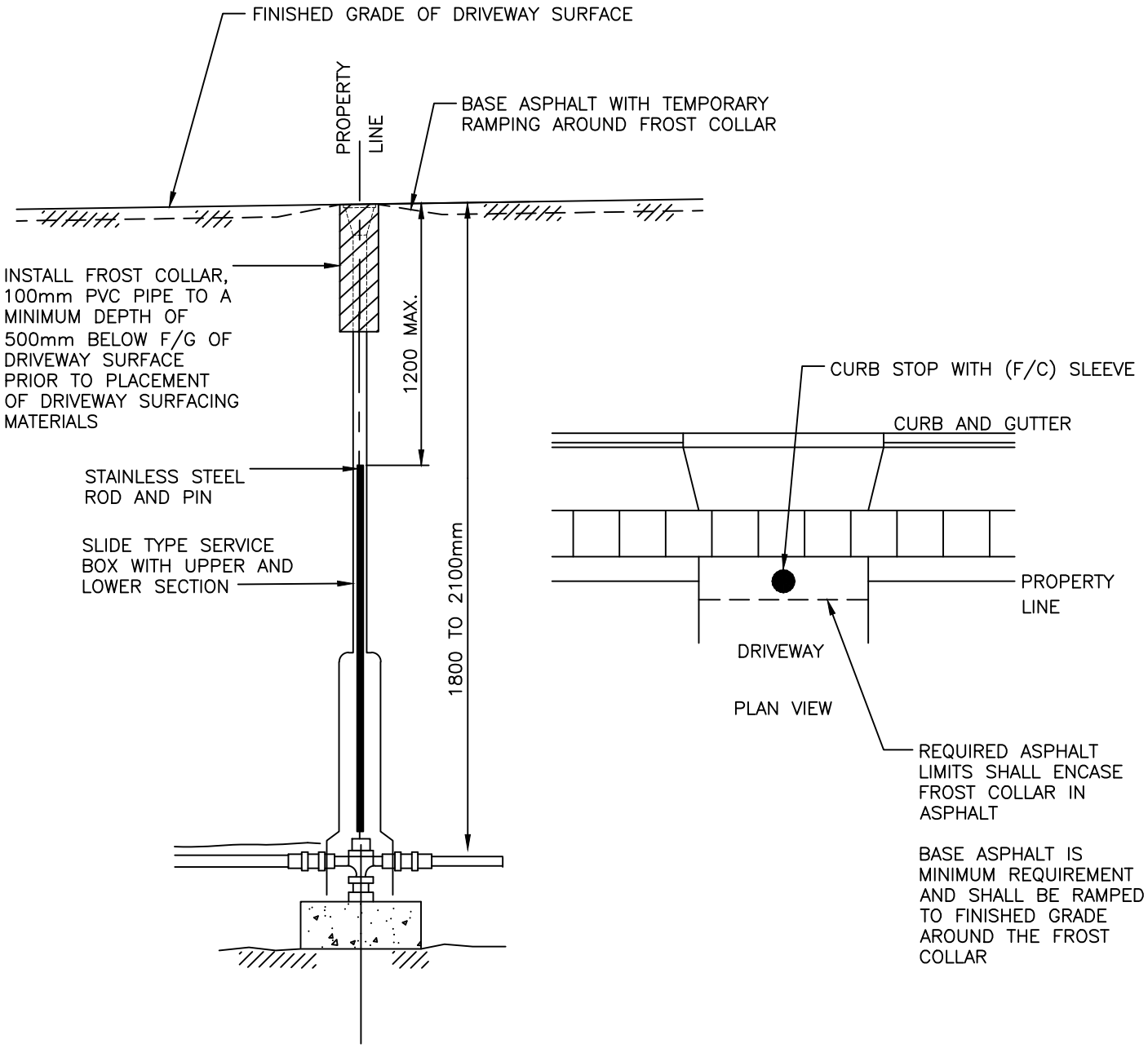

NOTES:
1. ALL DIMENSIONS ARE IN MILLIMETERS UNLESS OTHERWISE SHOWN.
2. FROST COLLAR TO BE ENCASED IN ASPHALT FOR ACCEPTANCE AND REFUND OF DEPOSIT.
3. TOP OF FROST COLLAR SLEEVE TO BE SET AT THE ELEVATION OF FINISHED SURFACE.
4. IF ONLY PLACING THE BASE COAT OF ASPHALT, THE ASPHALT SHALL BE RAMPED AROUND THE SLEEVE UP TO FINISHED GRADE TO PREVENT DAMAGE TO THE SLEEVE.
5. ASPHALT RAMPING NOT REQUIRED WHEN DRIVEWAY IS FULLY COMPLETED TO FINISH GRADE WITH SURFACE ASPHALT.

FROST COLLAR DETAIL

TOWNSHIP OF WILMOT
PUBLIC WORKS AND ENGINEERING DEPARTMENT

DATE: FEBRUARY 2022

SCALE: NTS

DWG No.: WIL-DET-22-17 | REV: 0

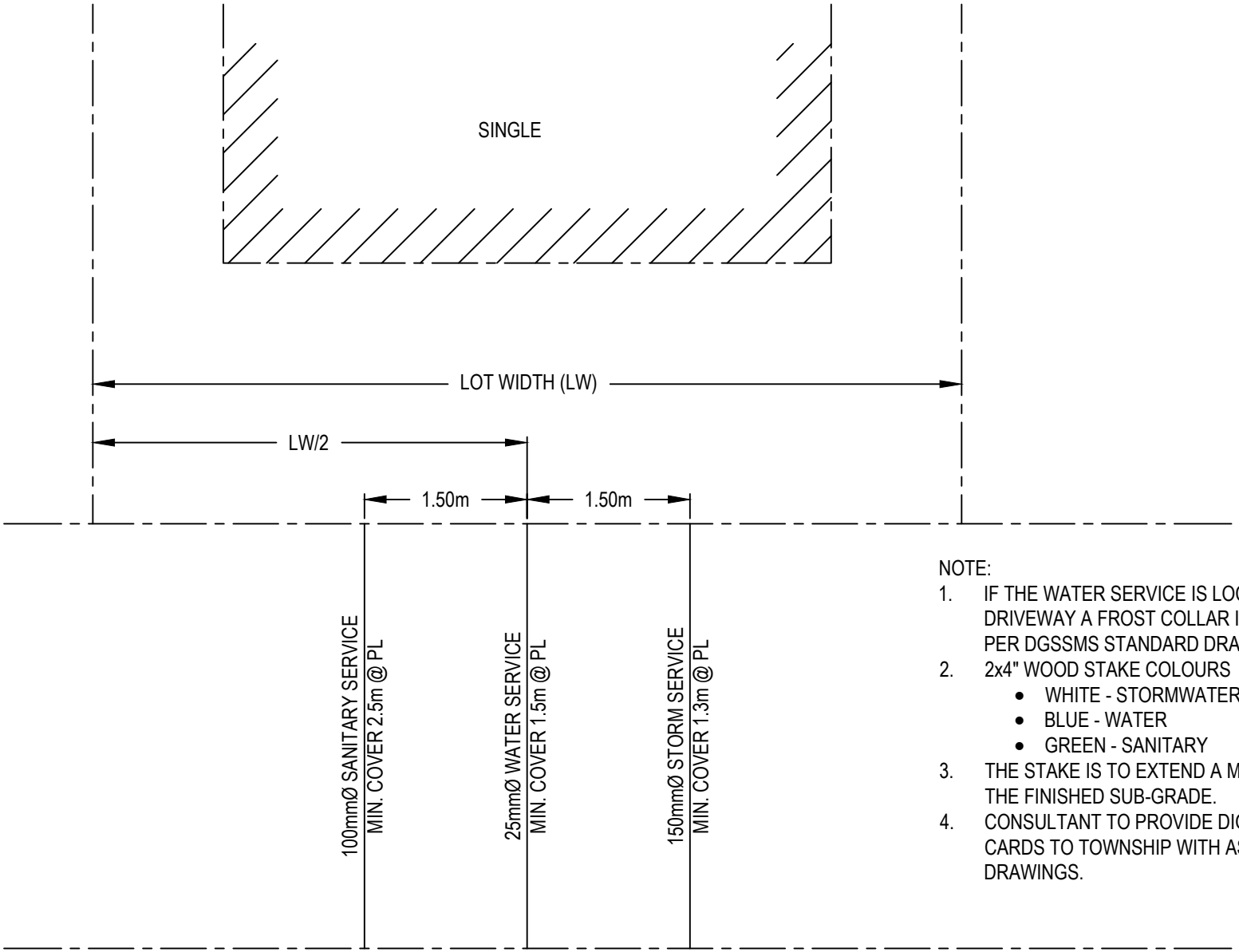

NOTE:

1. IF THE WATER SERVICE IS LOCATED WITHIN A DRIVEWAY A FROST COLLAR IS TO BE INSTALLED PER DGSSMS STANDARD DRAWING E2-03.
2. 2x4" WOOD STAKE COLOURS
   - WHITE - STORMWATER
   - BLUE - WATER
   - GREEN - SANITARY
3. THE STAKE IS TO EXTEND A MINIMUM 1.2m ABOVE THE FINISHED SUB-GRADE.
4. CONSULTANT TO PROVIDE DIGITAL SERVICE CARDS TO TOWNSHIP WITH AS RECORDED DRAWINGS.

LOT SERVICING LOCATION DETAIL

TOWNSHIP OF WILMOT
PUBLIC WORKS AND ENGINEERING DEPARTMENT

DATE: FEBRUARY 2022

SCALE: NTS

DWG No.: WIL-DET-22-18 | REV: 0

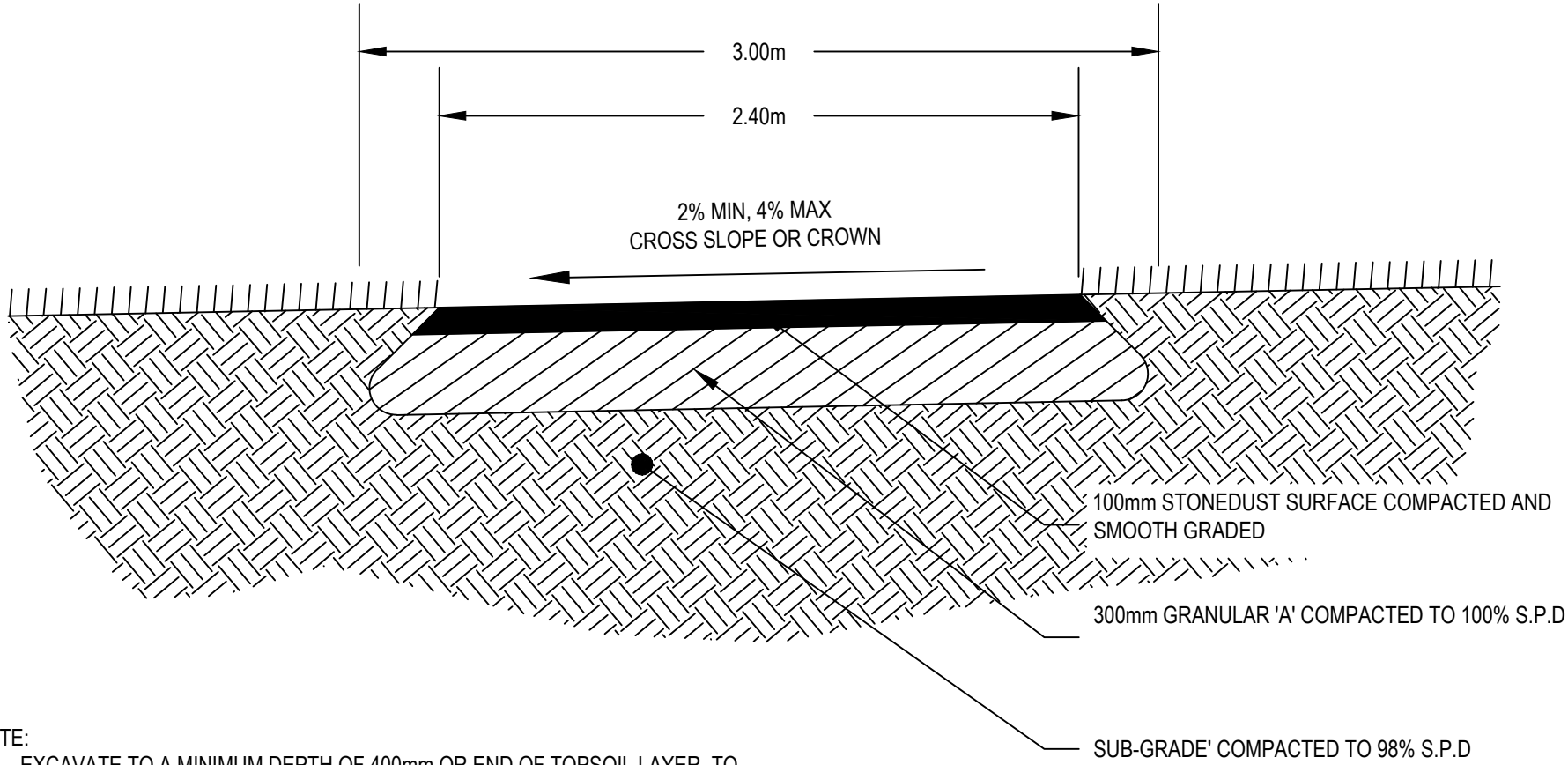

NOTE:

1. EXCAVATE TO A MINIMUM DEPTH OF 400mm OR END OF TOPSOIL LAYER, TO A MAXIMUM DEPTH OF 850mm. FILL ADDITIONAL EXCAVATED TOPSOIL WITH COMPACTED GRANULAR 'B' TO A MAXIMUM DEPTH OF 450mm.
2. IF LONGITUDINAL GRADE EXCEEDS 4% STONEDUST TO BE REPLACED WITH 40mm HL3 AND 50mm HL4 AS PER TOWNSHIP DETAIL WIL-DET-22-01.

STONE DUST TRAIL DETAIL

TOWNSHIP OF WILMOT
PUBLIC WORKS AND ENGINEERING DEPARTMENT

DATE: FEBRUARY 2022

SCALE: NTS

DWG No.: WIL-DET-22-19 | REV: 0

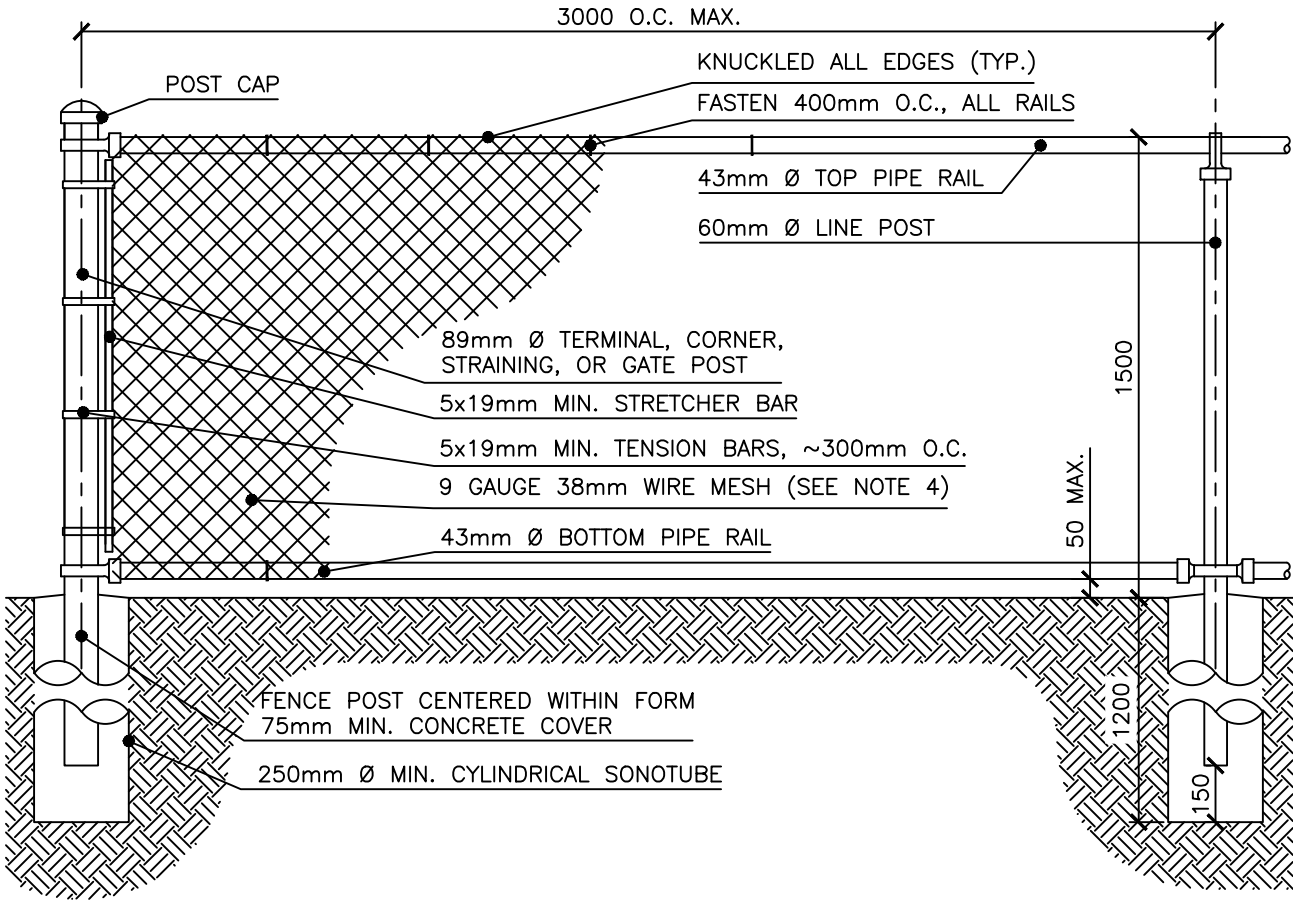

NOTES:

1. ALL FENCING AND FASTENERS TO BE GALVANIZED PRIOR TO FABRICATION.
2. EXTRUDED BLACK VINYL COATING MAY BE APPLIED PROVIDED ALL FENCING MATERIALS ARE GALVANIZED PRIOR TO COATING. WHERE VINYL COATING APPLIED, ALL FENCING ELEMENTS TO BE COATED.
3. MID–BRACING RAILS REQUIRED WHERE FENCE HEIGHT IS GREATER THAN THAT SHOWN ON THE DETAIL. MID–BRACE TO BE 43mm Ø RAIL ON TERMINAL, CORNER, STRAINING OR GATE POSTS.
4. WIRE MESH SHALL BE MEASURED AT 9 GAUGE *PRIOR* TO GALVANIZING AND/OR ADDITIONAL COATING.
5. CONCRETE FOOTINGS TO BE 20Mpa STRENGTH AT 28 DAYS
6. ALL PIPE TO BE SCHEDULE 40.

CHAINLINK FENCE WALKWAY BLOCK DETAIL	TOWNSHIP OF WILMOT PUBLIC WORKS AND ENGINEERING DEPARTMENT	
	DATE: FEBRUARY 2022	
	SCALE: NTS	
	DWG No.: WIL-DET-22-20	REV: 0

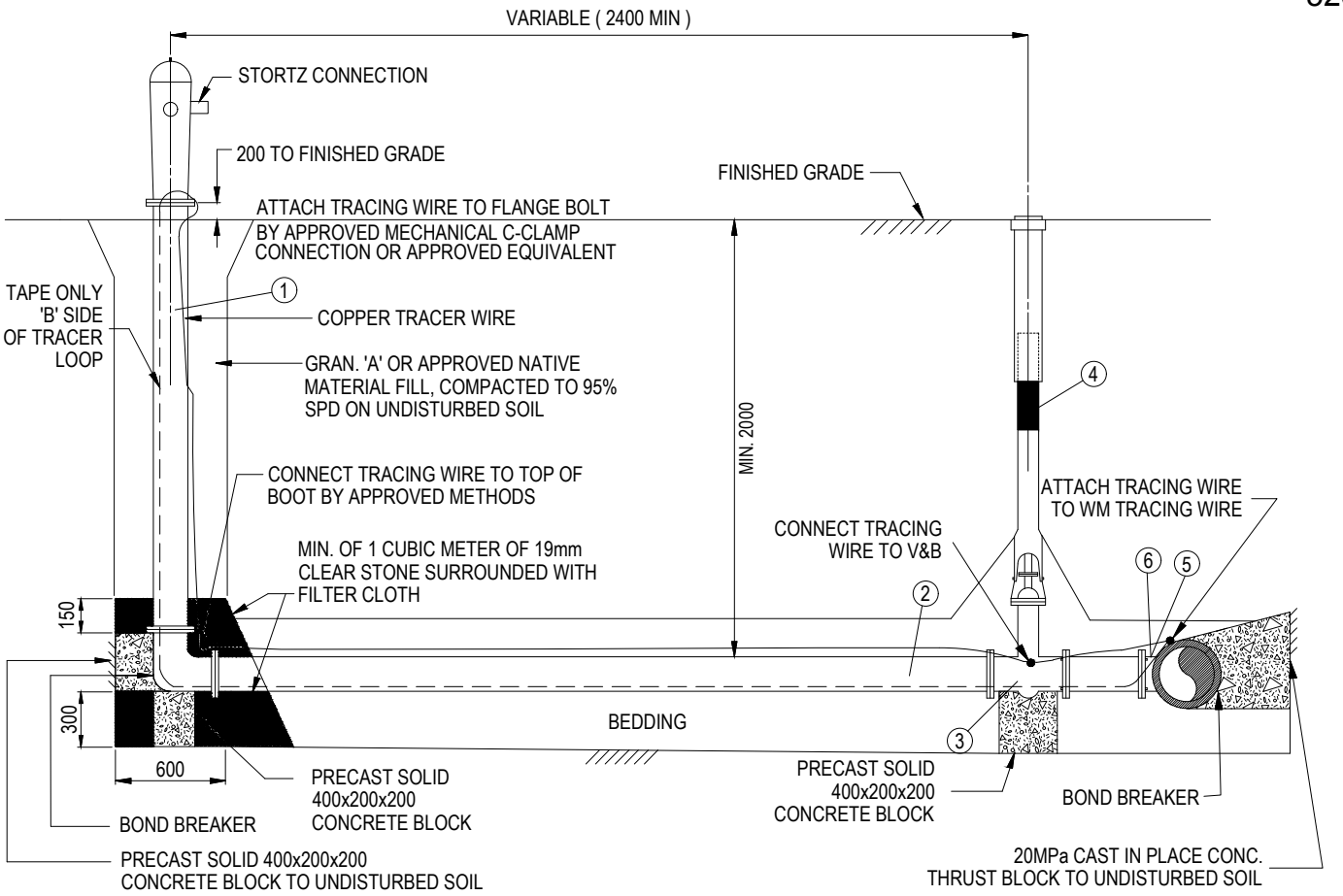

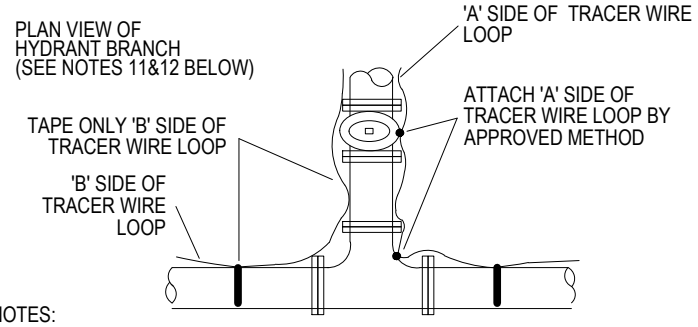

MANUFACTURED ITEMS LIST

1. REGULAR 150mm DIA. BARREL USE EXTENSION IF REQUIRED.
2. MINIMUM DIA. PIPE FOR HYDRANT LEADS TO BE 150mm DIA.
3. MINIMUM SIZE M.J. GATE VALVE TO BE 150mm DIA.
4. VALVE BOX
5. USE ANCHOR TEE UP TO AND INCLUDING 450mm DIA. WITH MECHANICAL RESTRAINTS.
6. FOR TEES LARGER THAN 450mm DIA. USE MECHANICAL RESTRAINTS.

NOTES:

1. HYDRANT TO BE SET PLUMB WITH STEM EXTENSIONS TO SUIT DEPTH OF BRANCH. BRANCH TO BE SET LEVEL. EXTENSIONS TO BE INSTALLED BETWEEN UPPER AND LOWER BARREL SECTION. ONLY ONE EXTENSION (MAX. 1.0m LONG) PER HYDRANT. IF MORE HEIGHT IS REQUIRED, THEN A LONGER BARREL SHALL BE USED.
2. ALL BLOCKING TO BE AGAINST UNDISTURBED TRENCH WALL.
3. ALL DIMENSIONS ARE IN MILLIMETERS UNLESS OTHERWISE SPECIFIED.
4. BOND BREAKER TO BE USED BETWEEN CONCRETE AND FITTINGS.
5. CORROSION PROTECTION SHALL BE AFFIXED AS PER STANDARD SPECIFICATIONS FOR WATERMAIN CONSTRUCTION.
6. NO BENDS ON HYDRANT LEADS UNLESS APPROVED.
7. ALL JOINTS TO BE FULLY RESTRAINED FROM HYDRANT BOOT TO TEE (THREADED RODS SHALL NOT BE USED).
8. PLUG DRAIN HOLE IN HIGH WATER TABLE.
9. HYDRANTS SHALL BE CLEAR OF OBSTRUCTIONS FOR A DISTANCE OF 0.6m REAR, 2.0m ON SIDES AND CLEAR 9. TO CURB IN FRONT.
10. 'A' SIDE OF TRACER WIRE LOOP TO BE CONNECTED TO:
    a. ANCHOR TEE
    b. HYDRANT VALVE
    c. HYDRANT BARREL
12. 'B' SIDE OF TRACER WIRE LOOP TO BE TAPED ONLY TO:
    a. HYDRANT BARREL
    b. HYDRANT LEAD
    c. WATERMAIN
13. CAPS AND BONNET ARE TO BE PAINTED RED.

STANDARD HYDRANT INSTALLATION DETAIL		TOWNSHIP OF WILMOT PUBLIC WORKS AND ENGINEERING DEPARTMENT
		DATE: FEBRUARY 2022
		SCALE: NTS
		DWG No.: WIL-DET-22-21 REV: 0

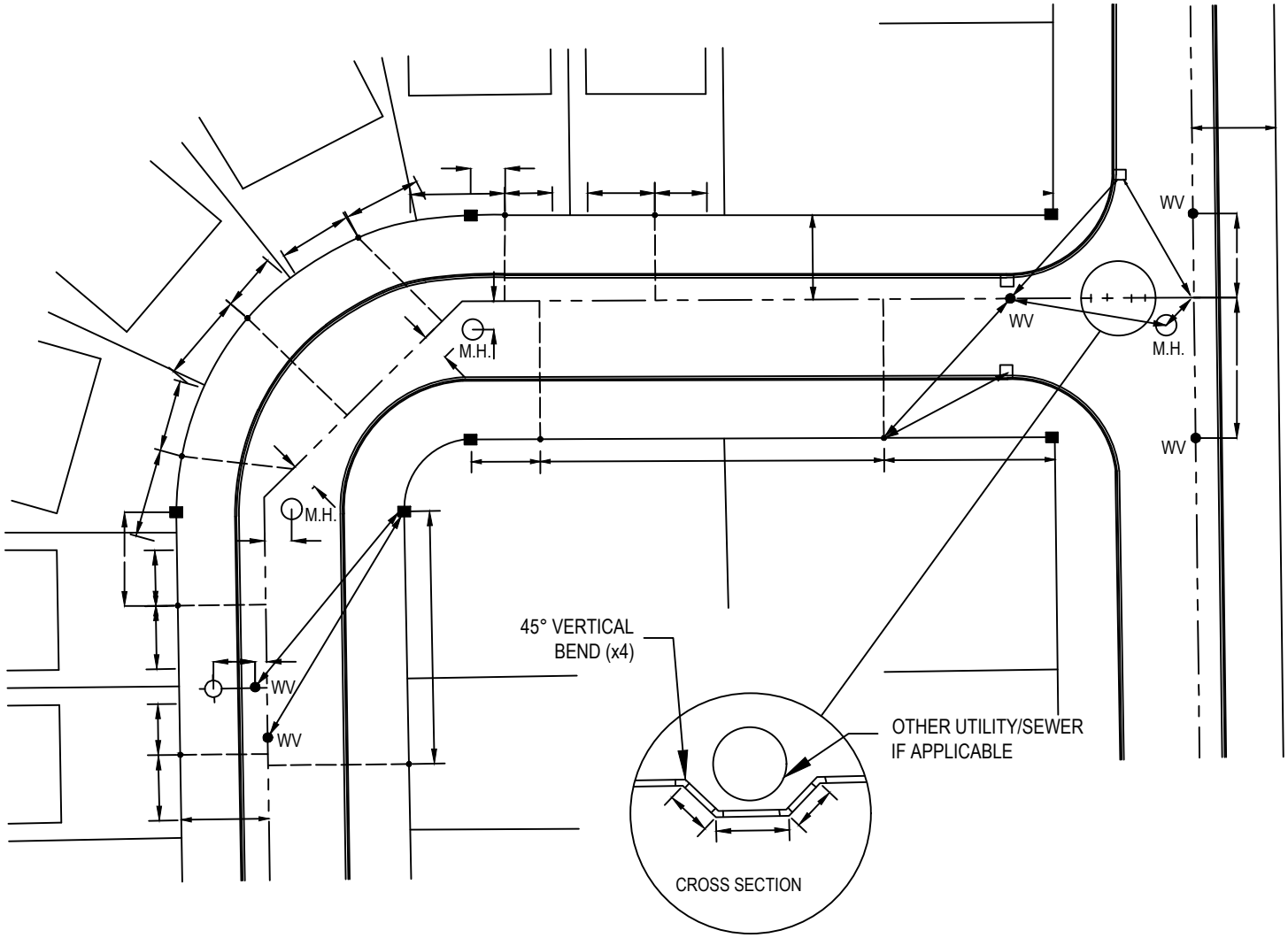

NOTES:

1. CHAINAGE TO BE WATERMAIN CHAINAGE NOT ℄ OF THE ROAD.
2. A MIN. OF 2 TIES AT RIGHT ANGLES OR LESS ARE REQUIRED FOR VALVES AND FITTINGS OTHERTHAN CURB STOPS.
3. MEASUREMENTS FOR CURB STOPS TO BE 90° FROM HOUSE CORNERS TO CURB STOP. THE ALIGNMENT PROJECTION TO HOUSE DISTANCE FROM HOUSE TO CURB STOP.
4. WATERMAIN RECORDS TO BE IN ACCORDANCE WITH DGSSMS AND THIS DOCUMENT.

LEGEND:

■ - SIB

● - WATER VALVE
WV

STANDARD AS RECORDED MEASUREMENT FOR WATERMAIN ASSETS	TOWNSHIP OF WILMOT PUBLIC WORKS AND ENGINEERING DEPARTMENT	
	DATE: FEBRUARY 2022	
	SCALE: NTS	
	DWG No.: WIL-DET-22-22	REV: 0

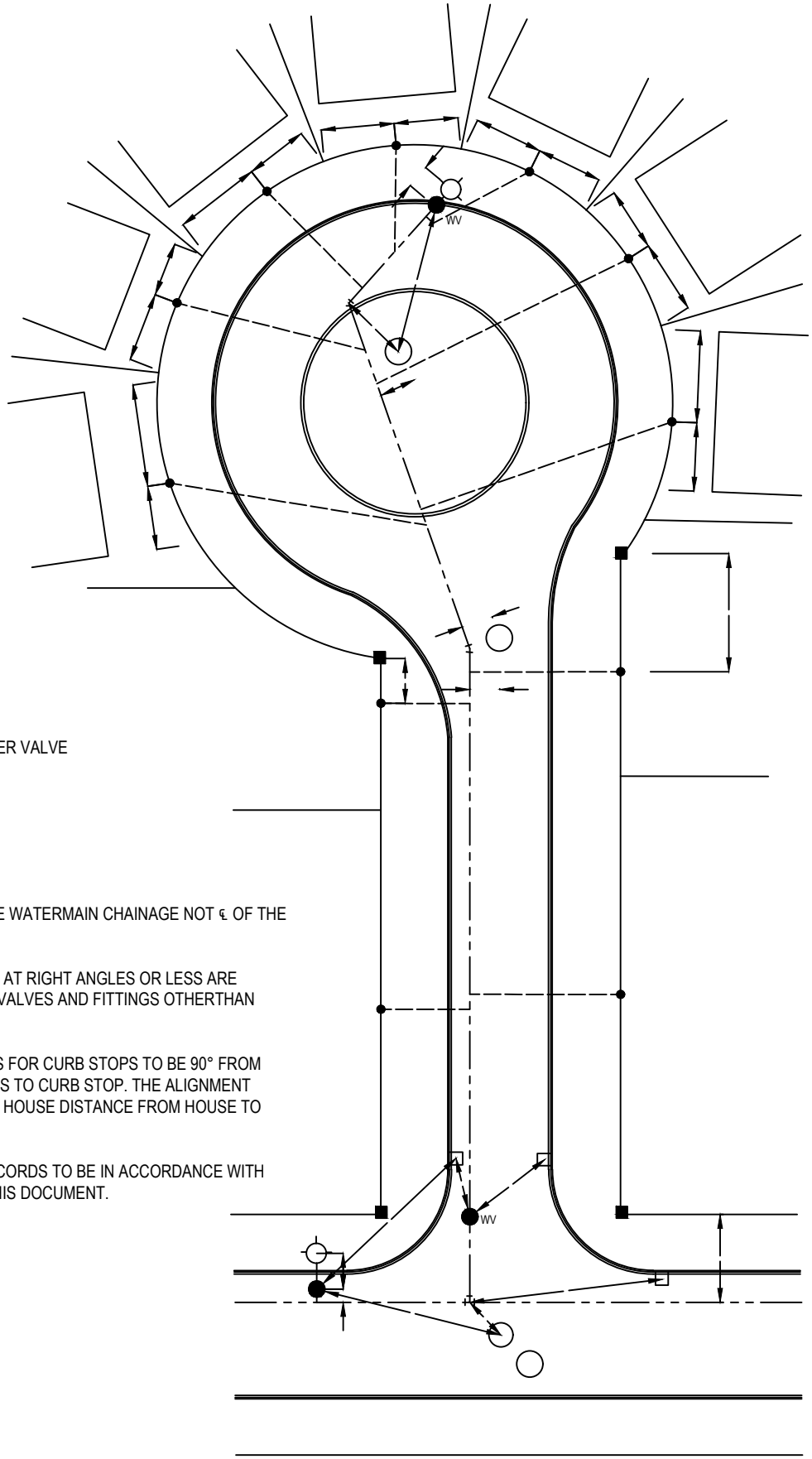

LEGEND:

■ - SIB

● - WATER VALVE
WV

NOTES:

1. CHAINAGE TO BE WATERMAIN CHAINAGE NOT ℄ OF THE ROAD.
2. A MIN. OF 2 TIES AT RIGHT ANGLES OR LESS ARE REQUIRED FOR VALVES AND FITTINGS OTHERTHAN CURB STOPS.
3. MEASUREMENTS FOR CURB STOPS TO BE 90° FROM HOUSE CORNERS TO CURB STOP. THE ALIGNMENT PROJECTION TO HOUSE DISTANCE FROM HOUSE TO CURB STOP.
4. WATERMAIN RECORDS TO BE IN ACCORDANCE WITH DGSSMS AND THIS DOCUMENT.

STANDARD AS RECORDED MEASUREMENT FOR WATERMAIN ASSETS (2)	TOWNSHIP OF WILMOT PUBLIC WORKS AND ENGINEERING DEPARTMENT	
	DATE: FEBRUARY 2022	
	SCALE: NTS	
	DWG No.: WIL-DET-22-23	REV: 0

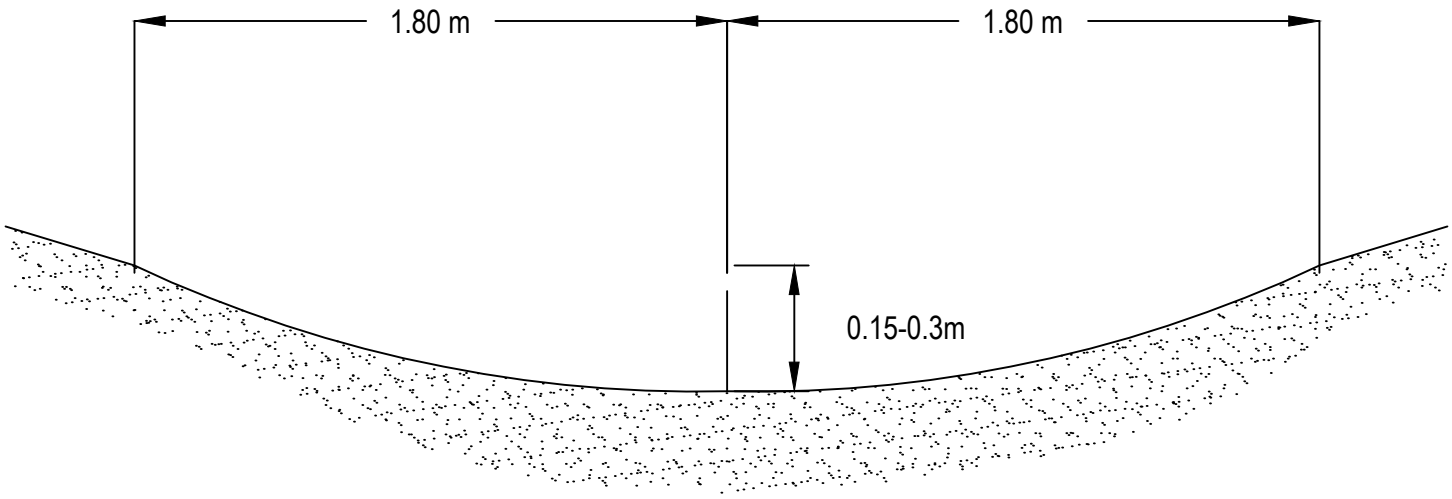

NOTE:

OPTIMUM SIDE SLOPE: 1 VERTICAL TO 6 HORIZONTAL

MAXIMUM SIDE SLOPE: 1 VERTICAL TO 3 HORIZONTAL

MINIMUM GRADIENT: 2%

MAXIMUM GRADIENT: 8%

GRADE TRANSITIONS SHALL BE SMOOTH TO FACILITATE THE MOWING OPERATION

MINIMUM SWALES DEPTH 150 mm

MAXIMUM SWALES DEPTH 300 mm

CROSS SECTION OF GRASS SWALES

TOWNSHIP OF WILMOT
PUBLIC WORKS AND ENGINEERING DEPARTMENT

DATE: **FEBRUARY 2022**

SCALE: **NTS**

DWG No.: **WIL-DET-22-24** REV: 0

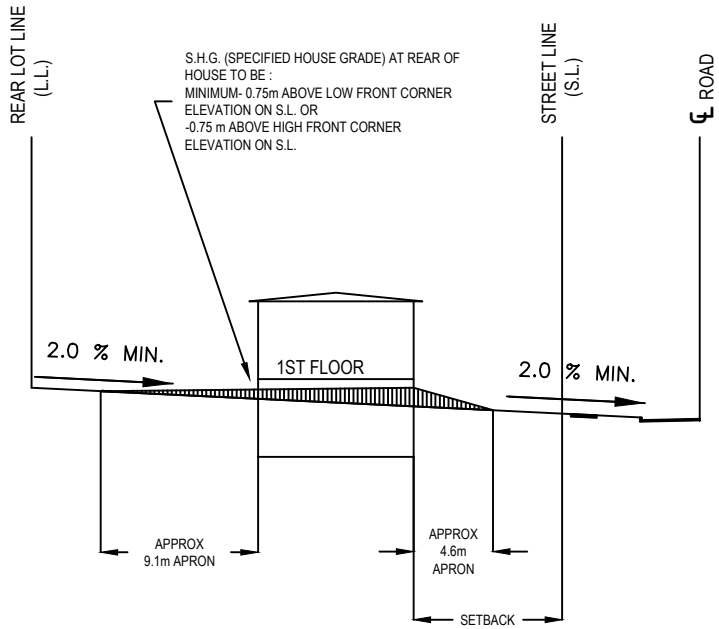

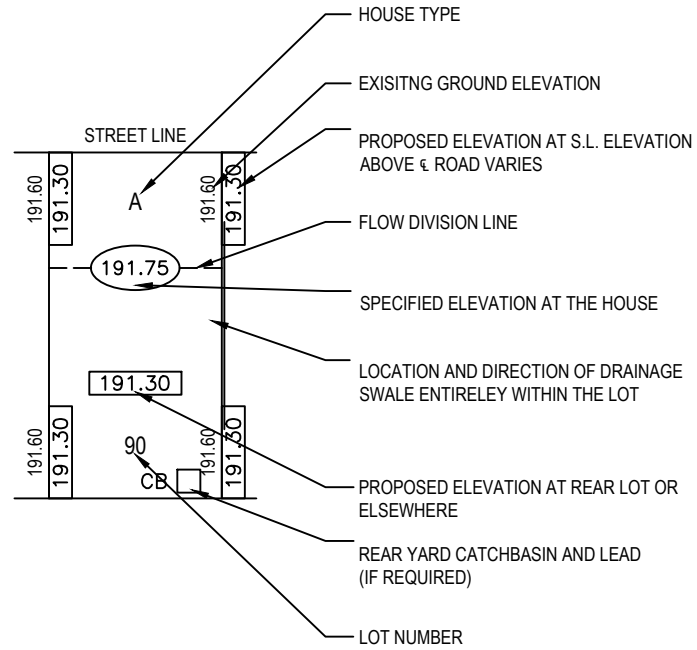

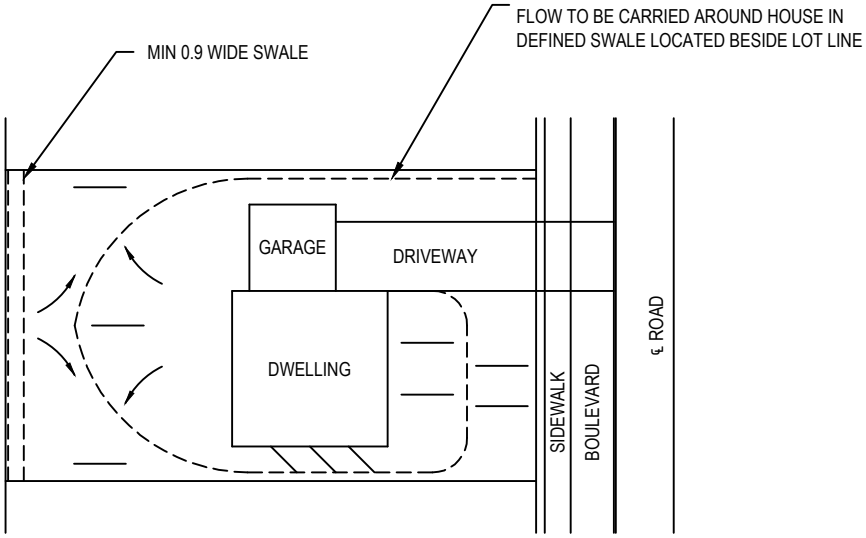

GENERAL NOTES
(FOR ALL GRADING TYPES)

1. DIFFERENCE BETWEEN BUILDING LINE ELEVATION AND SIDE YARD SWALE ELEVATION IS TO BE MIN. 0.15m AND MAX 0.30m ACCORDING TO SIDE YARD WIDTH.
2. ALL SWALES TO BE MIN 2.0%.
3. A MIN 0.3m APRON IS TO BE MAINTINED AGAINST ALL DWELLING UNITS TO ALLOW ACCESS FROM SIDE ENTRANCES TO THE FRONT AND REAR YARDS, 0.3m ACCESS TO BE ON GARAGE SIDE IF NO SIDE DOOR.
4. SLOPES WITHIN LOTS ARE TO HAVE A MAX GRADE OF 3:1. STRUCTURAL RETAINING WALL REQUIRED WHERE MAX. SLOPE EXCEEDED.
5. DIFFERENCE BETWEEN SIDE DOOR SILL AND GROUND ELEVATION TO BE MAX. 0.40m.
6. DIFFERENCE BETWEEN TOP OF FOUNDATION WALL AND BUILDING LINE ELEVATION TO BE MIN 0.15m.
7. A MIN OF 6m OF THE REAR LOT AREA FROM THE BACK OF THE HOUSE SHALL BE GRADED BETWEEN 2% TO A MAX 6%.
8. TYPE "A" AND TYPE "C" LOTS WITH THROUGH DRAINAGE FROM OTHER TYPE LOTS ABUTTING THE REAR LOT LINE ARE TO BE A MIN. OF 12m IN WIDTH.
9. DRIVEWAY GRADES:
   FROM CURB TO STREET LINE: MIN. 2.0% AND MAX. 8.0%

URBAN LOT GRADING TYPE 'A'
BACK TO FRONT DRAINAGE

TOWNSHIP OF WILMOT
PUBLIC WORKS AND ENGINEERING DEPARTMENT

DATE: **FEBRUARY 2022**

SCALE: **NTS**

DWG No.: **WIL-DET-22-24** REV: 0

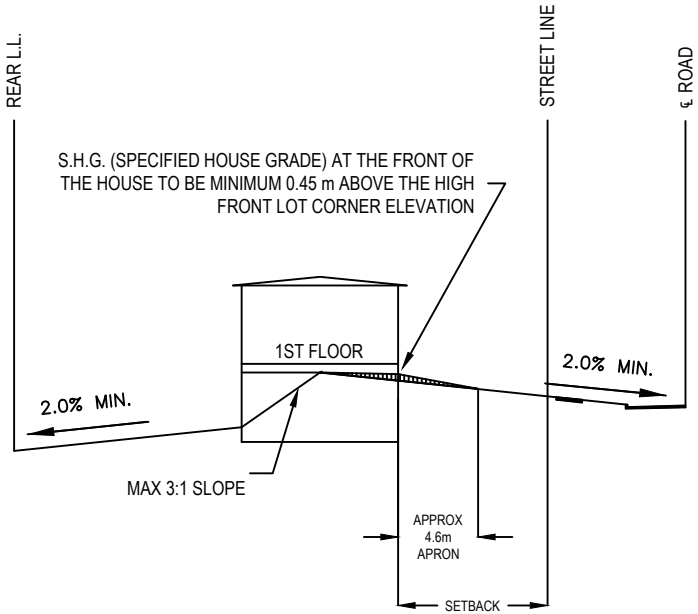

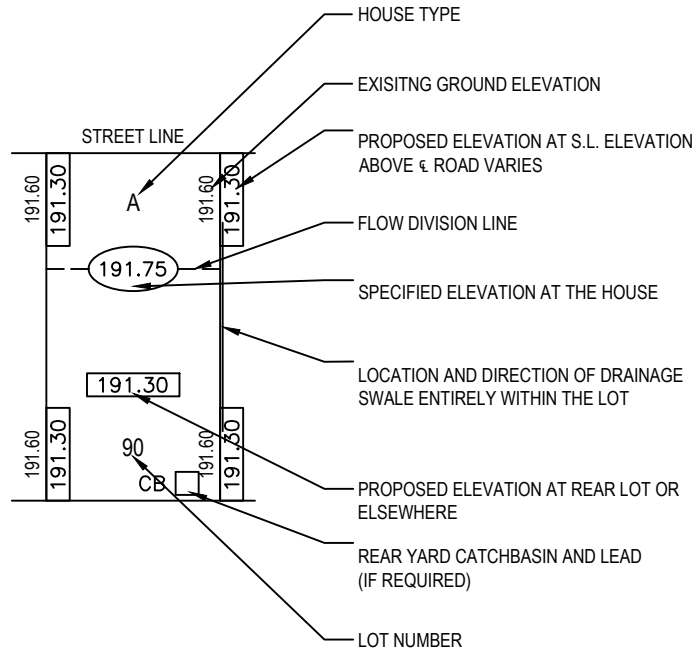

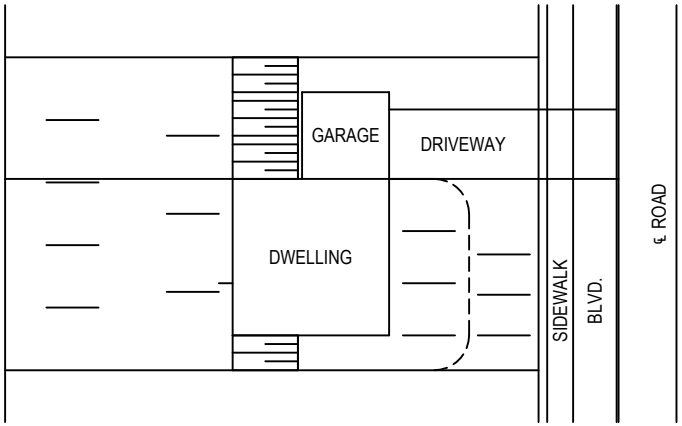

GENERAL NOTES
(FOR ALL GRADING TYPES)

1. DIFFERENCE BETWEEN BUILDING LINE ELEVATION AND SIDE YARD SWALE ELEVATION IS TO BE MIN. 0.15m AND MAX 0.30m ACCORDING TO SIDE YARD WIDTH.
2. ALL SWALES TO BE MIN 2.0% .
3. A MIN 0.3 m APRON IS TO BE MAINTINED AGAINST ALL DWELLING UNITS TO ALLOW ACCESS FROM SIDE ENTRANCES TO THE FRONT AND REAR YARDS, 0.3 m ACCESS TO BE ON GARAGE SIDE IF NO SIDE DOOR.
4. SLOPES WITHIN LOTS ARE TO HAVE A MAX GRADE OF 3:1. STRUCTURAL RETAINING WALL REQUIRED WHERE MAX. SLOPE EXCEEDED.
5. DIFFERENCE BETWEEN SIDE DOOR SILL AND GROUND ELEVATION TO BE MAX. 0.40m.
6. DIFFERENCE BETWEEN TOP OF FOUNDATION WALL AND BUILDING LINE ELEVATION TO BE MIN 0.15m.
7. A MIN OF 6m OF THE REAR LOT AREA FROM THE BACK OF THE HOUSE SHALL BE GRADED BETWEEN 2% TO A MAX 6%.
8. TYPE "A" AND TYPE "C" LOTS WITH THROUGH DRAINAGE FROM OTHER TYPE LOTS ABUTTING THE REAR LOT LINE ARE TO BE A MIN. OF 12m IN WIDTH.
9. DRIVEWAY GRADES:
   FROM CURB TO STREET LINE: MIN. 2.0% AND MAX. 8.0%

URBAN LOT GRADING TYPE 'B' SPLIT DRAINAGE WITH WALKOUT

TOWNSHIP OF WILMOT
PUBLIC WORKS AND ENGINEERING DEPARTMENT

DATE: **FEBRUARY 2022**

SCALE: **NTS**

DWG No.: **WIL-DET-22-26** REV: 0

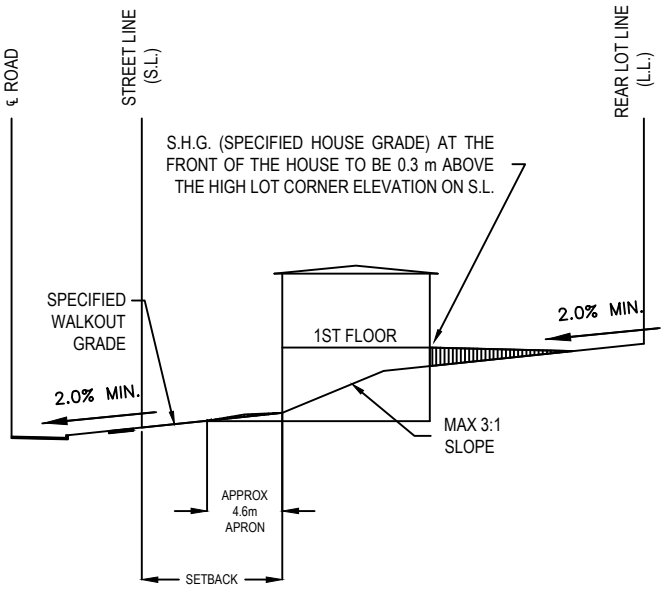

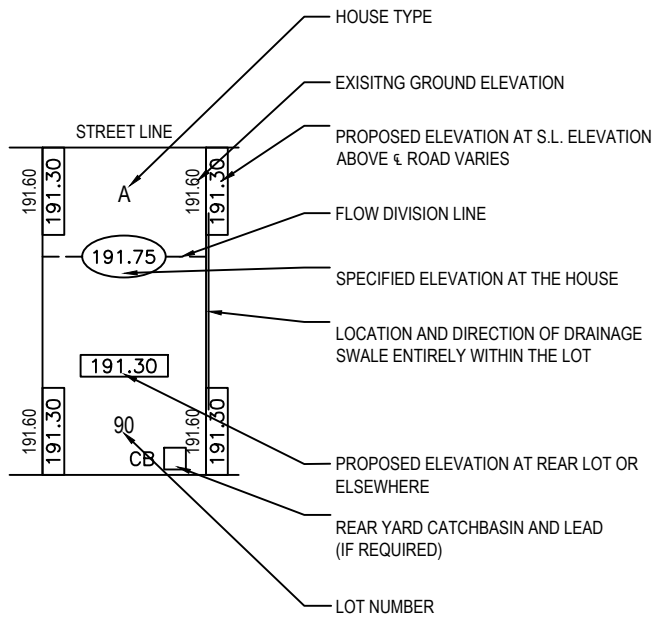

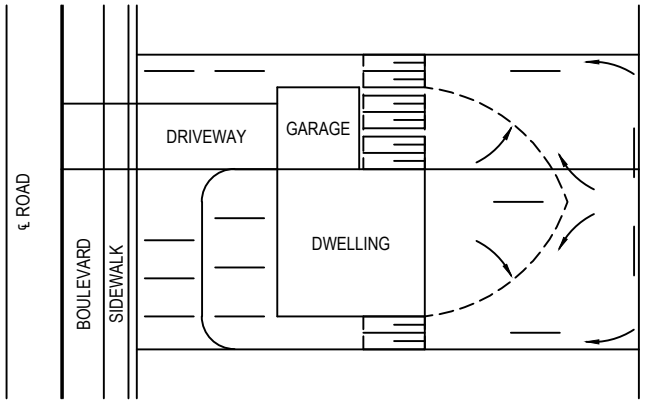

GENERAL NOTES
(FOR ALL GRADING TYPES)

1. DIFFERENCE BETWEEN BUILDING LINE ELEVATION AND SIDE YARD SWALE ELEVATION IS TO BE MIN. 0.15m AND MAX 0.30m ACCORDING TO SIDE YARD WIDTH.
2. ALL SWALES TO BE MIN 2.0%.
3. A MIN 0.3 m APRON IS TO BE MAINTINED AGAINST ALL DWELLING UNITS TO ALLOW ACCESS FROM SIDE ENTRANCES TO THE FRONT AND REAR YARDS, 0.3 m ACCESS TO BE ON GARAGE SIDE IF NO SIDE DOOR.
4. SLOPES WITHIN LOTS ARE TO HAVE A MAX GRADE OF 3:1. STRUCTURAL RETAINING WALL REQUIRED WHERE MAX. SLOPE EXCEEDED.
5. DIFFERENCE BETWEEN SIDE DOOR SILL AND GROUND ELEVATION TO BE MAX. 0.40m.
6. DIFFERENCE BETWEEN TOP OF FOUNDATION WALL AND BUILDING LINE ELEVATION TO BE MIN 0.15m.
7. A MIN OF 6m OF THE REAR LOT AREA FROM THE BACK OF THE HOUSE SHALL BE GRADED BETWEEN 2% TO A MAX 6%.
8. TYPE "A" AND TYPE "C" LOTS WITH THROUGH DRAINAGE FROM OTHER TYPE LOTS ABUTTING THE REAR LOT LINE ARE TO BE A MIN. OF 12m IN WIDTH.
9. DRIVEWAY GRADES:
   FROM CURB TO STREET LINE: MIN. 2.0% AND MAX. 8.0%

URBAN LOT GRADING TYPE 'C' BACK TO FRONT WITH WALKOUT

TOWNSHIP OF WILMOT
PUBLIC WORKS AND ENGINEERING DEPARTMENT

DATE: **FEBRUARY 2022**

SCALE: **NTS**

DWG No.: **WIL-DET-22-27** REV: 0

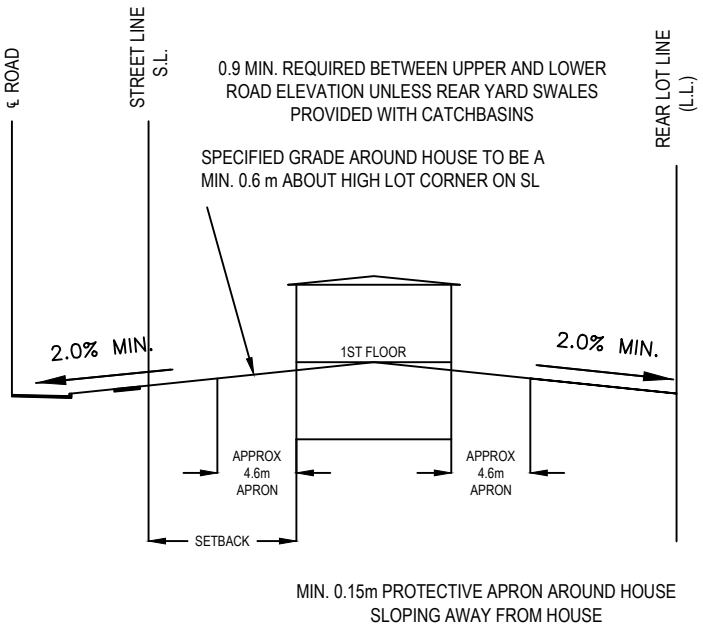

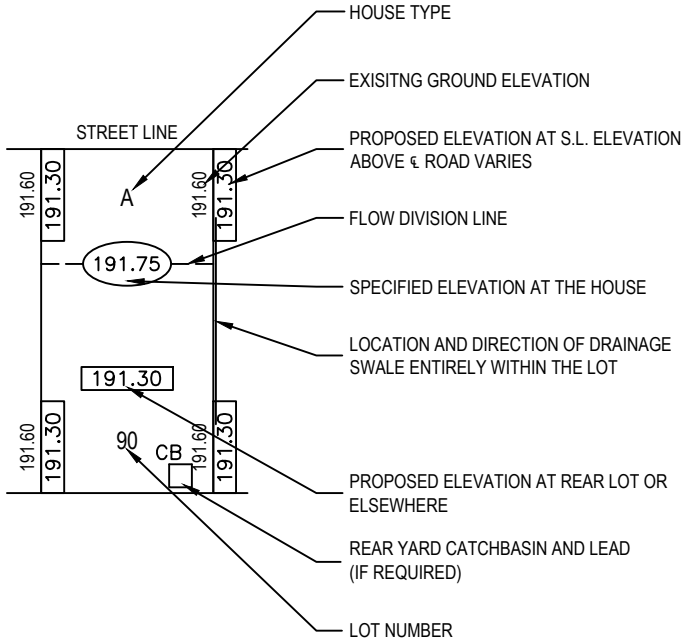

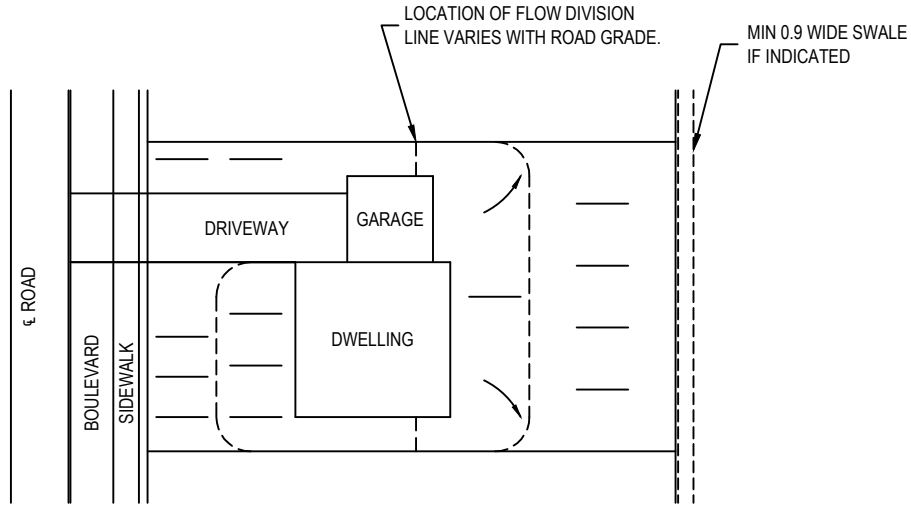

GENERAL NOTES
(FOR ALL GRADING TYPES)

1. DIFFERENCE BETWEEN BUILDING LINE ELEVATION AND SIDE YARD SWALE ELEVATION IS TO BE MIN. 0.15m AND MAX 0.30m ACCORDING TO SIDE YARD WIDTH.
2. ALL SWALES TO BE MIN 2.0%.
3. A MIN 0.3m APRON IS TO BE MAINTINED AGAINST ALL DWELLING UNITS TO ALLOW ACCESS FROM SIDE ENTRANCES TO THE FRONT AND REAR YARDS, 0.3m ACCESS TO BE ON GARAGE SIDE IF NO SIDE DOOR.
4. SLOPES WITHIN LOTS ARE TO HAVE A MAX GRADE OF 3:1. STRUCTURAL RETAINING WALL REQUIRED WHERE MAX. SLOPE EXCEEDED.
5. DIFFERENCE BETWEEN SIDE DOOR SILL AND GROUND ELEVATION TO BE MAX. 0.40m.
6. DIFFERENCE BETWEEN TOP OF FOUNDATION WALL AND BUILDING LINE ELEVATION TO BE MIN 0.15m.
7. A MIN OF 6m OF THE REAR LOT AREA FROM THE BACK OF THE HOUSE SHALL BE GRADED BETWEEN 2% TO A MAX 6%.
8. TYPE "A" AND TYPE "C" LOTS WITH THROUGH DRAINAGE FROM OTHER TYPE LOTS ABUTTING THE REAR LOT LINE ARE TO BE A MIN. OF 12m IN WIDTH.
9. DRIVEWAY GRADES:
   FROM CURB TO STREET LINE: MIN. 2.0% AND MAX. 8.0%

URBAN LOT GRADING TYPE 'D'
SPLIT DRAINAGE

TOWNSHIP OF WILMOT
PUBLIC WORKS AND ENGINEERING DEPARTMENT

DATE: **FEBRUARY 2022**

SCALE: **NTS**

DWG No.: **WIL-DET-22-28** REV: 0

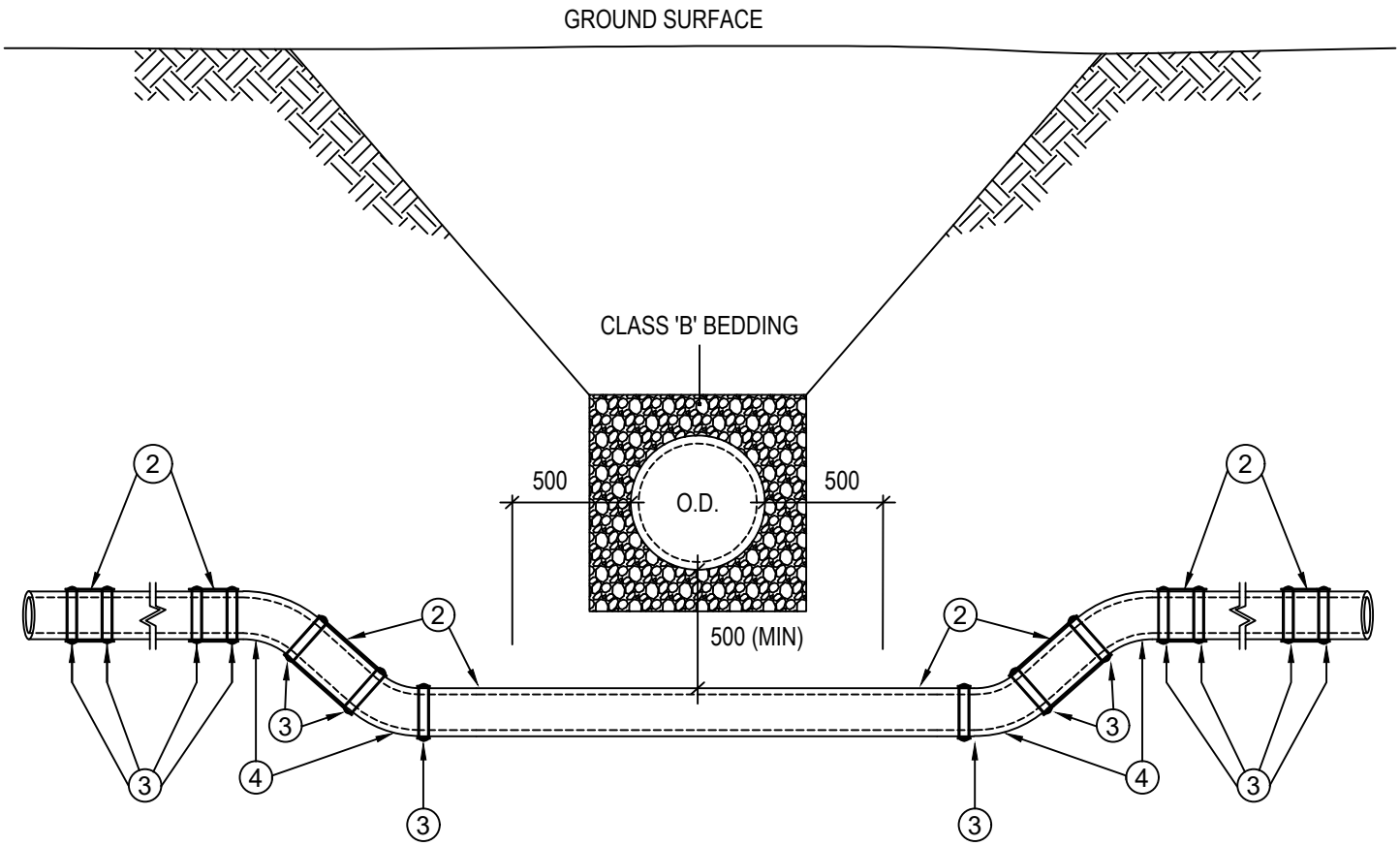

NOTES:

1. ALL DIMENSIONS ARE IN mm EXCEPT AS NOTED.
2. THREADED TIE RODS - TOP AND BOTTOM 19mmØ AND LENGTH AS REQUIRED PER MANUFACTURER STANDARDS AND/OR DGSSMS.
3. RETENTION CLAMPS - REQUIRED AT FIRST JOINT ON BOTH SIDES OF OFFSET AS PER MANUFACTURER STANDARDS AND/OR DGSSMS.
4. MANUFACTURED BENDS - MUST BE USED TO OBTAIN THE DESIRED ANGLES OF DEFLECTION.
5. ANODES, PETROLEUM TAPE AND TRACER WIRE TO BE INSTALLED AS PER DGSSMS.
6. AS RECORDED DETAILS/SURVEY SHOTS TO BE PROVIDED AT ALL WATERMAIN CROSSINGS.
7. CROSSING TO MEET MOECP PROCEDURE.

TYPICAL WATERMAIN OFFSET UNDER SEWERS		TOWNSHIP OF WILMOT PUBLIC WORKS AND ENGINEERING DEPARTMENT
		DATE: FEBRUARY 2022
		SCALE: NTS
		DWG No.: WIL-DET-22-29 REV: 0

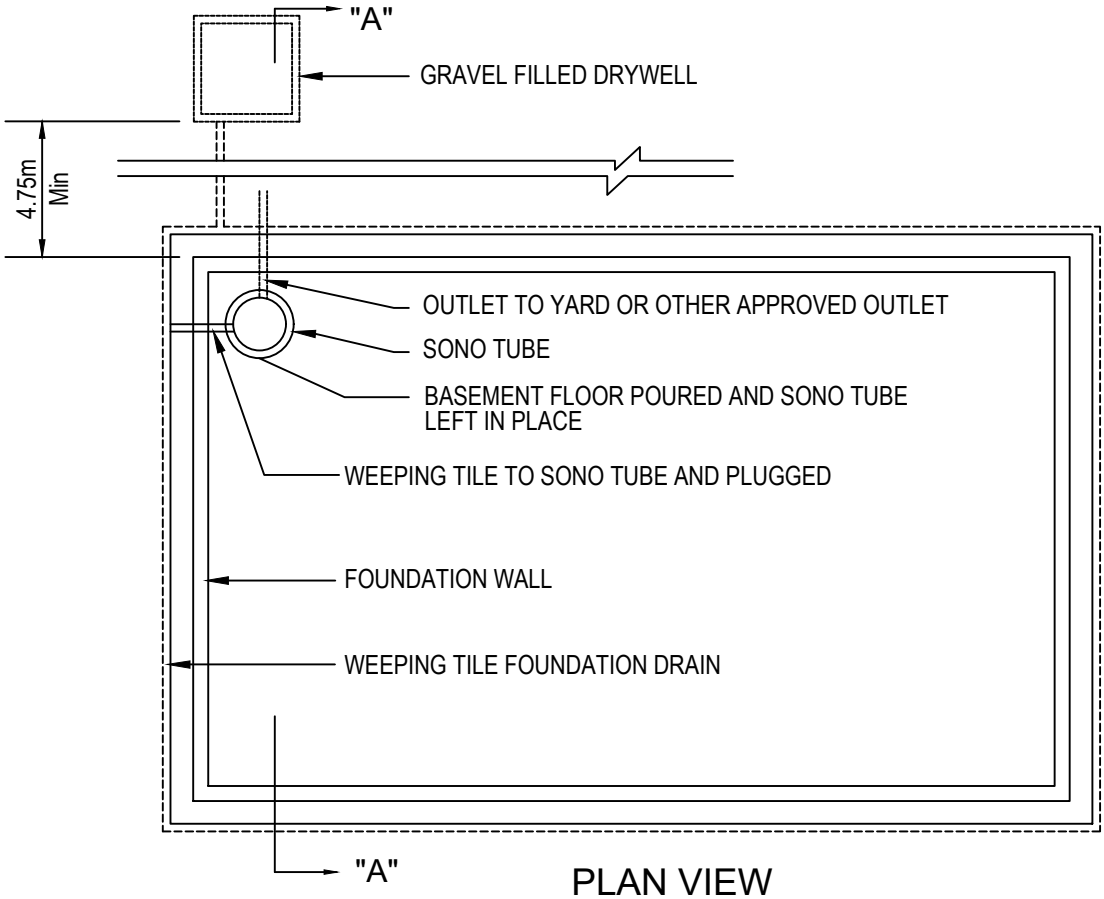

PLAN VIEW

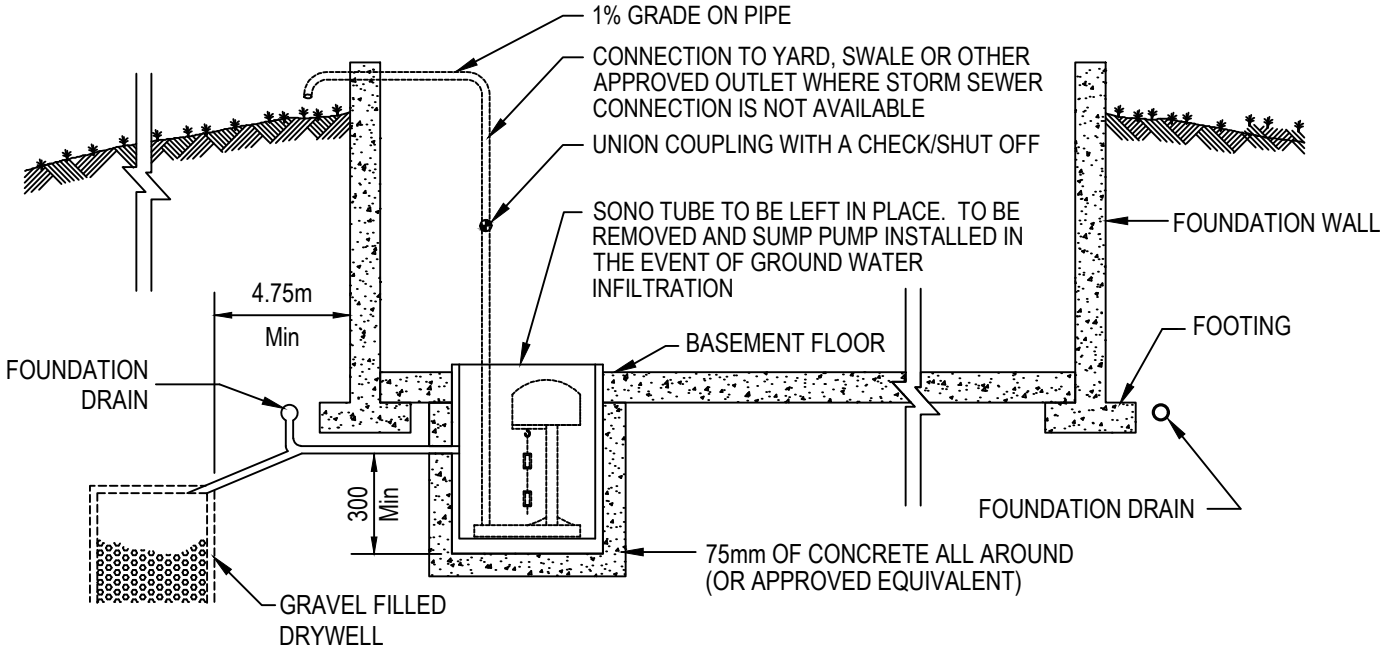

SECTION "A" - "A"

NOTES:

1. ALL DIMENSIONS ARE IN mm EXCEPT AS NOTED.
2. DRYWELL TO BE LOCATED IN THE FRONT OR REAR YARD DEPENDING ON WHICH IS LOWEST IN RELATION TO THE BASEMENT FLOOR ELEVATION.
3. DRYWELL TO BE USED WHERE SOILS ARE APPROPIATE.

WEEPING TILE CONNECTION in MINIMUM GROUND WATER AREAS		TOWNSHIP OF WILMOT PUBLIC WORKS AND ENGINEERING DEPARTMENT
		DATE: FEBRUARY 2022
		SCALE: NTS
		DWG No.: WIL-DET-22-30 REV: 0

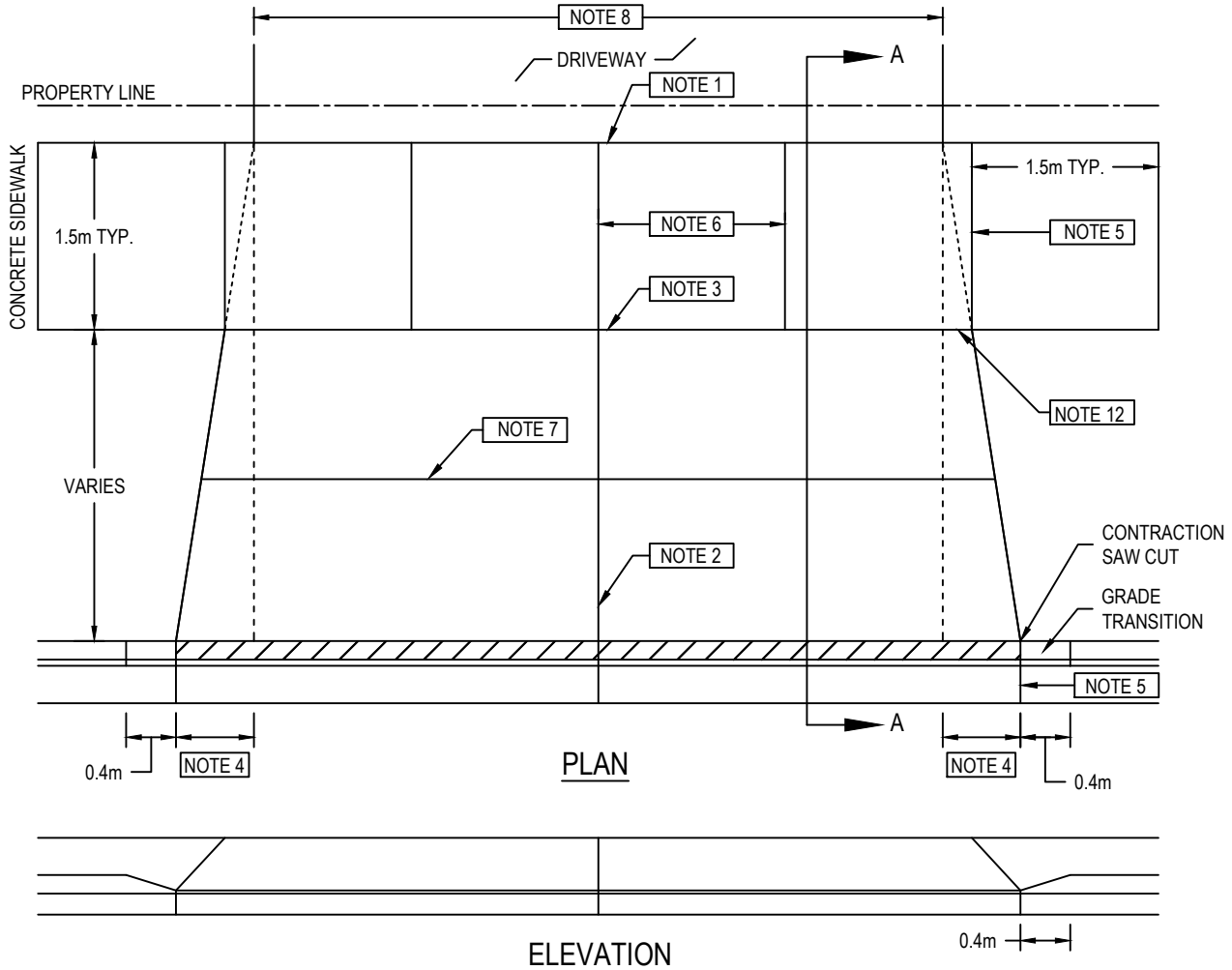

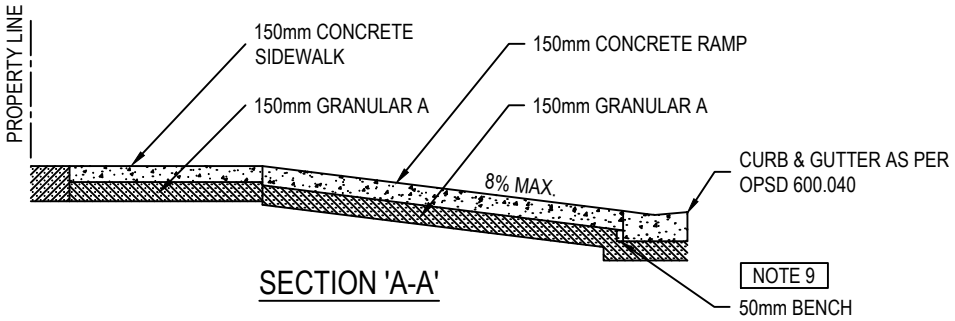

GENERAL NOTES:

1. IF THE DRIVEWAY IS CONCRETE, EXPANSION JOINT MATERIAL SHALL BE INSTALLED AT THE BACK OF THE SIDEWALK.
2. SAW CUTS SHALL BE PLACED AT THE CENTRELINE OF THE DRIVEWAY RAMP AND EXTENDED THROUGH THE SIDEWALK AND CURB.
3. EXCEPT IN NEW DEVELOPMENT, DRIVEWAY RAMPS MAY BE POURED MONOLITHICALLY WITH THE ADJACENT SIDEWALK, IN WHICH CASE TOOLED SAW CUT JOINTS SHALL BE PLACED ALONG THE FRONT EDGE OF THE SIDEWALK, ACROSS THE DRIVEWAY ENTRANCE, WHERE BOULEVARD IS LESS THAN 1.5m.
4. THE DISTANCE ALONG THE CURB FROM THE EXTENDED EDGE OF THE DRIVEWAY AT THE BACK OF THE SIDEWALK TO THE BOTTOM OF THE DEPRESSED CURB SHALL BE 1/4 OF THE DISTANCE FROM THE BACK OF CURB TO THE FRONT OF SIDEWALK TO A MAXIMUM OF 1000mm, BUT SHALL NOT BE LESS THAN 500mm. NEW DEVELOPMENT SHALL BE 0.3m.
5. SAW CUTS SHALL BE PLACED IN THE SIDEWALK WHERE THE DRIVEWAY RAMP TAPER INTERSECTS AND IN THE CURB AT THE BOTTOM OF GRADE TRANSITION.
6. TOOLED JOINTS IN THE DRIVEWAY PORTION OF THE SIDEWALK SHALL BE SPACED EQUALLY TO MATCH THE TYPICAL JOINTING OF SIDEWALK AS CLOSE AS POSSIBLE.
7. WHERE DRIVEWAY RAMP WIDTH EXCEEDS 3000mm, A LONGITUDINAL SAW CUT JOINT IS TO BE PROVIDED AT THE MID-POINT.
8. ALLOWABLE RAMP WIDTHS AT THE SIDEWALK ARE BETWEEN 3.65m AND 6.0m.
9. DEPRESSED CURB AND GUTTER AT DRIVEWAY ENTRANCES SHALL HAVE AN ADDITIONAL 50mm BENCH TO SUPPORT ADJACENT CONCRETE RAMPS, REFER TO OPSD 600.040.
10. REFER TO OPSD 350.010 FOR COMMERCIAL/INDUSTRIAL RAMP DESIGN.
11. REFER TO TOWNSHIP OF WILMOT STANDARD SPECIFICATIONS AND INFRASTRUCTURE MANUAL FOR FURTHER INFORMATION.
12. FOR NEW DEVELOPMENT, RAMP WIDTH AT FRONT OF SIDEWALK IS TO EQUAL THE WIDTH OF THE DRIVEWAY AT THE BACK OF SIDEWALK.

STANDARD DROP CURB & CONCRETE DRIVEWAY RAMP

TOWNSHIP OF WILMOT
PUBLIC WORKS AND ENGINEERING DEPARTMENT

DATE: FEBRUARY 2022

SCALE: NTS

DWG No.: WIL-DET-22-31 | REV: 0

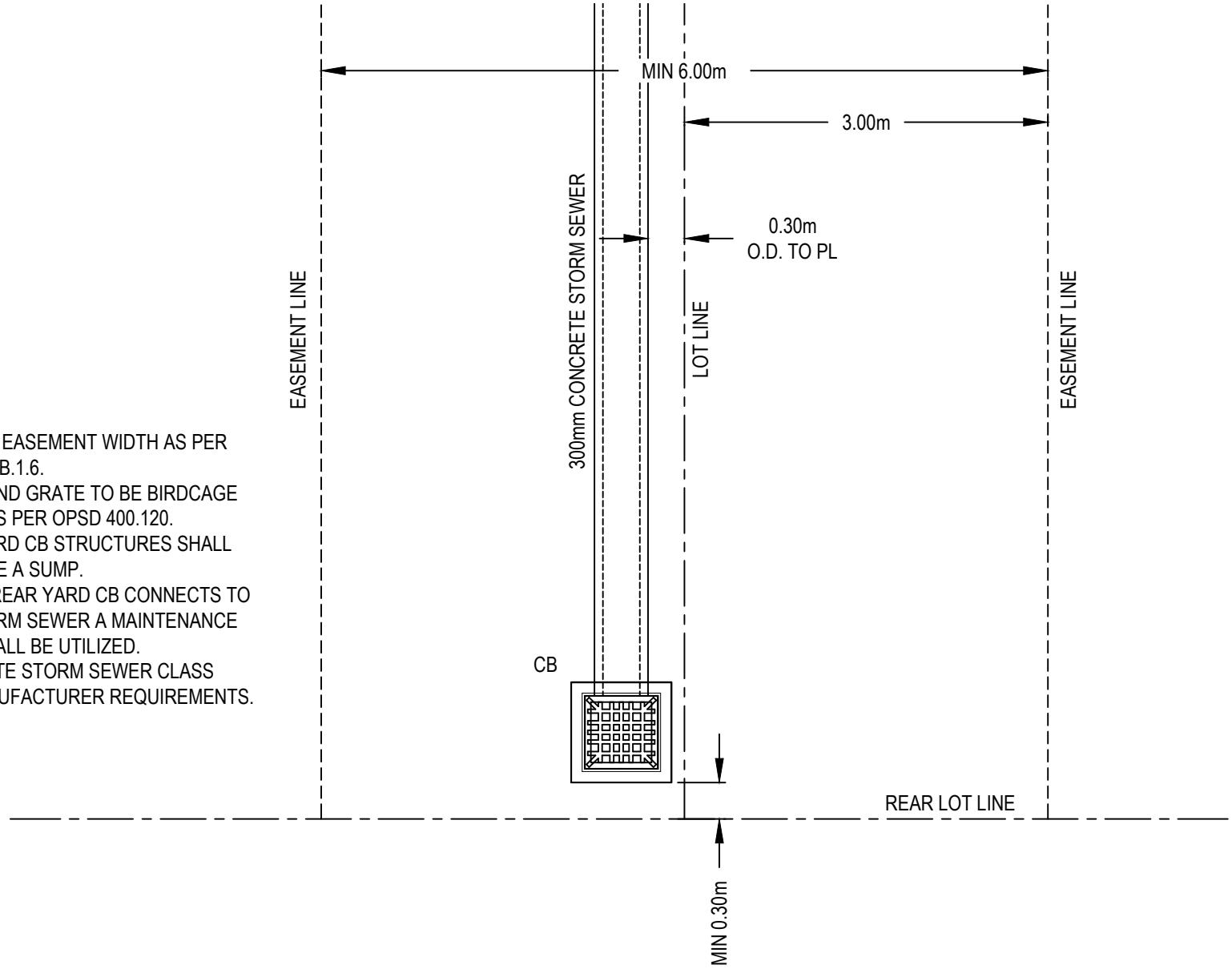

NOTE:

1. MINIMUM EASEMENT WIDTH AS PER DGSSMS B.1.6.
2. FRAME AND GRATE TO BE BIRDCAGE GRATE AS PER OPSD 400.120.
3. REAR YARD CB STRUCTURES SHALL NOT HAVE A SUMP.
4. WHERE REAR YARD CB CONNECTS TO THE STORM SEWER A MAINTENANCE HOLE SHALL BE UTILIZED.
5. CONCRETE STORM SEWER CLASS PER MANUFACTURER REQUIREMENTS.

STORM SEWER EASEMENT DETAIL

TOWNSHIP OF WILMOT
PUBLIC WORKS AND ENGINEERING DEPARTMENT

DATE: FEBRUARY2022

SCALE: NTS

DWG No.: WIL-DET-22-32 | REV: 0

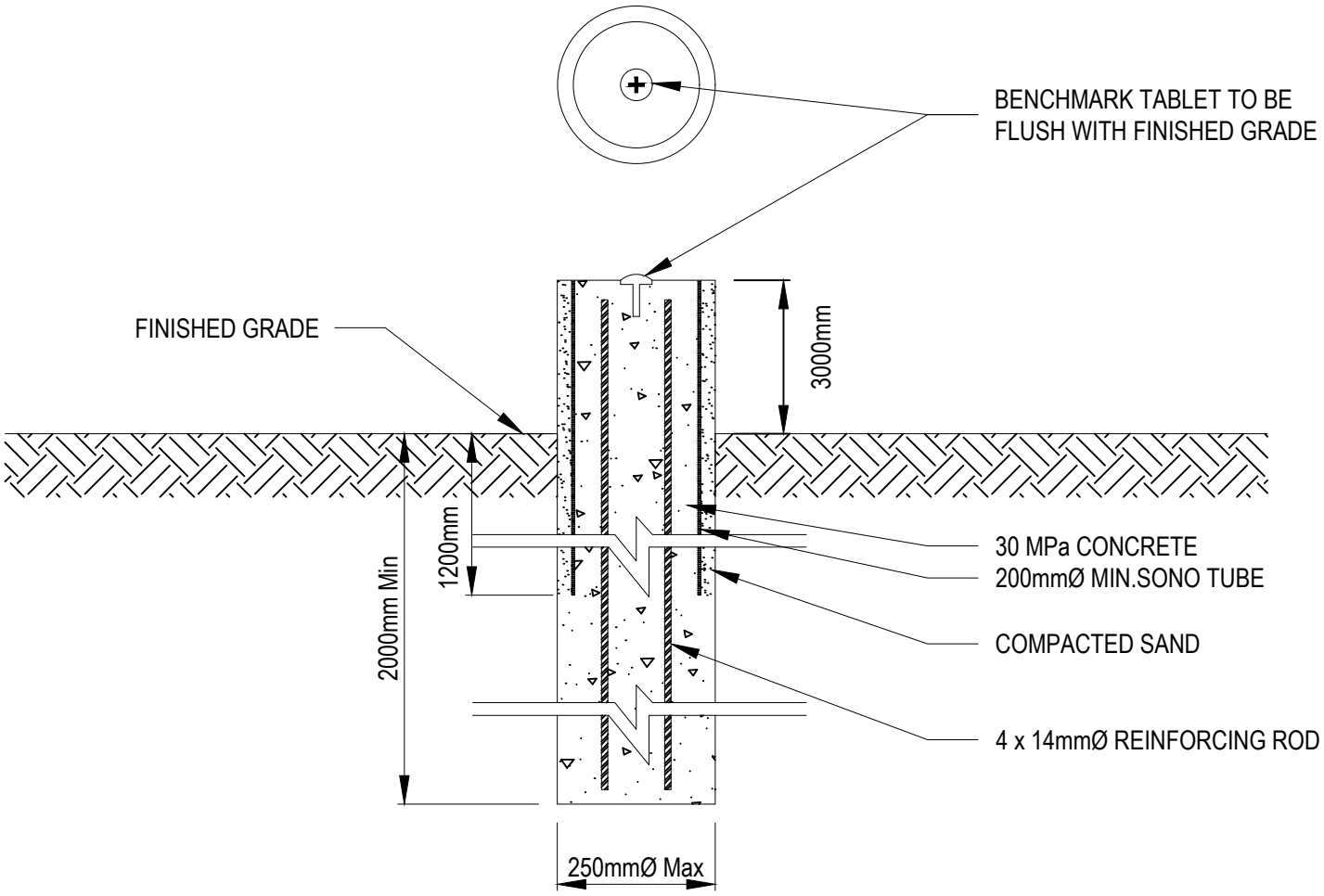

NOTES:

1. A MINIMUM OF FOUR (4) CONTROL POINTS WILL BE LEFT ON SITE.
2. BENCHMARK MONUMENTS AT A MINIMUM 100m INTERVALS.
3. THIS DETAIL IS TO BE READ IN CONJUNCTION WITH SURVEY REQUIREMENTS SECTION OF THE INFRASTRUCTURE MANUAL FOR ADDITIONAL DETAILS AND REQUIREMENTS.

BENCHMARK MONUMENT		TOWNSHIP OF WILMOT PUBLIC WORKS AND ENGINEERING DEPARTMENT
		DATE: FEBRUARY 2022
		SCALE: NTS
		DWG No.: WIL-DET-22-33 REV: 0

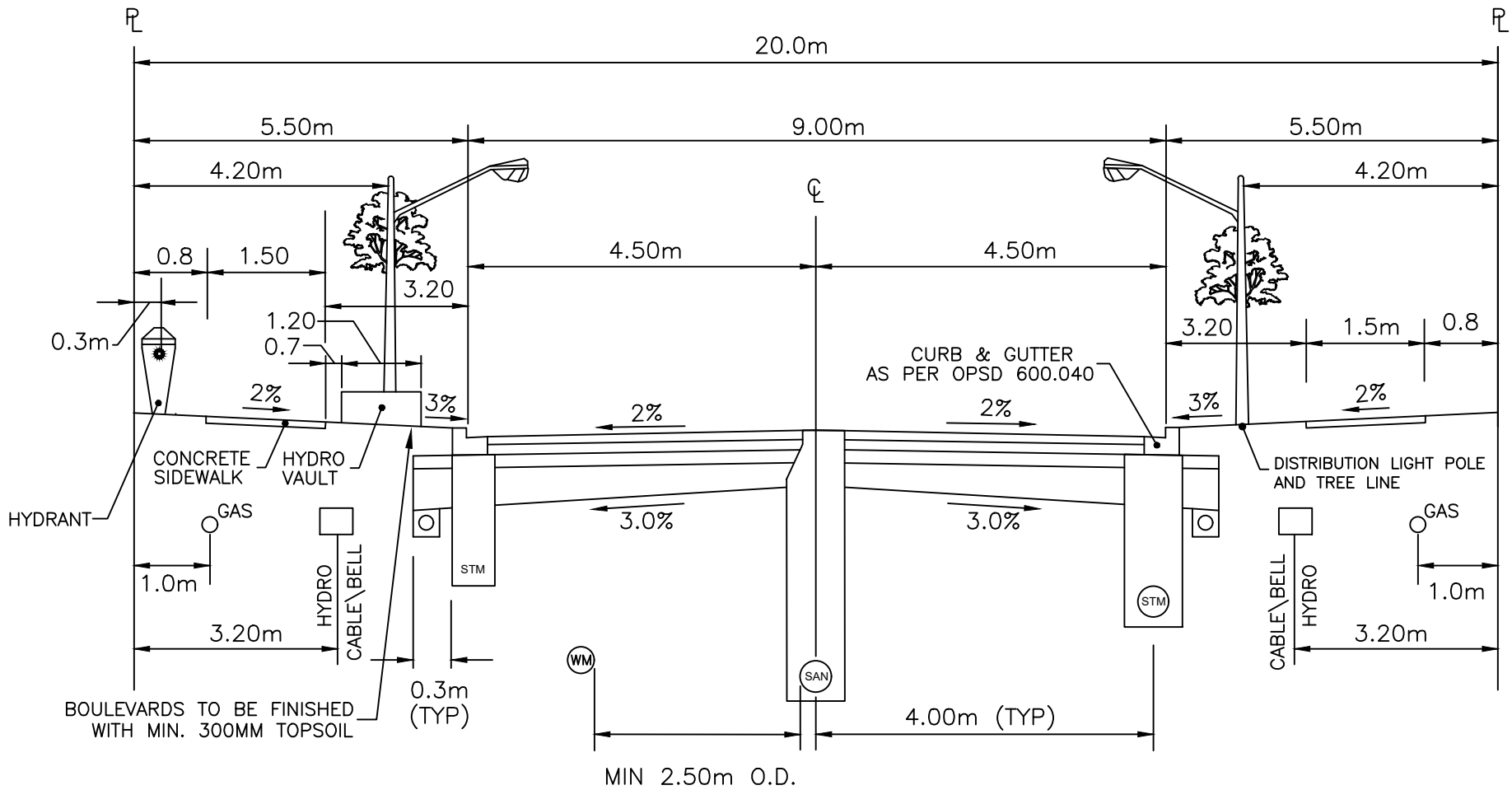

NOTES:

1. ALL DIMENSION IN METERS.(UNLESS NOTED)
2. SUBDRAIN SHALL BE 150mm PERFORATED PIPE c/w SOCK AND MASONARY SAND (TYP.)
3. MINIMUM DEPTH OF COVER

STORM SEWER	1.50m
SANITARY SEWER	2.80m
WATERMAIN	2.00m
GAS MAIN	0.75m IN BLVD.
HYDRO/BELL/CABLE	1.00m IN BLVD.

4. CURB STOP VALVES AT PROPERTY LINE (PREFERRED LOCATION OUT OF DRIVEWAY)
5. HYDRANT VALVES LOCATED 0.50m BEHIND CURB
6. MINIMUM DEPTH OF COVER FOR SERVICE LATERALS AT PROPERTY LINE.

STORM SERVICE	1.30m
SANITARY SERVICE	2.50m
WATER SERVICE	1.80m

7. THE FOLLOWING IS A MINIMUM ROAD BASE AND WILL REQUIRE A SOILS REPORT VERIFICATIONS TO DERMINE IF ADDITIONAL THICKNESS IS REQUIRED.

40mm HL3
100mm HL4
200mm GRANULAR 'A'
600mm GRANULAR 'B'

20.0m LOCAL ROAD ROW

TOWNSHIP OF WILMOT
PUBLIC WORKS AND ENGINEERING DEPARTMENT

DATE: FEBRUARY 2022

SCALE: N.T.S.

DWG No.: WIL-DET-22-34 | REV: 0

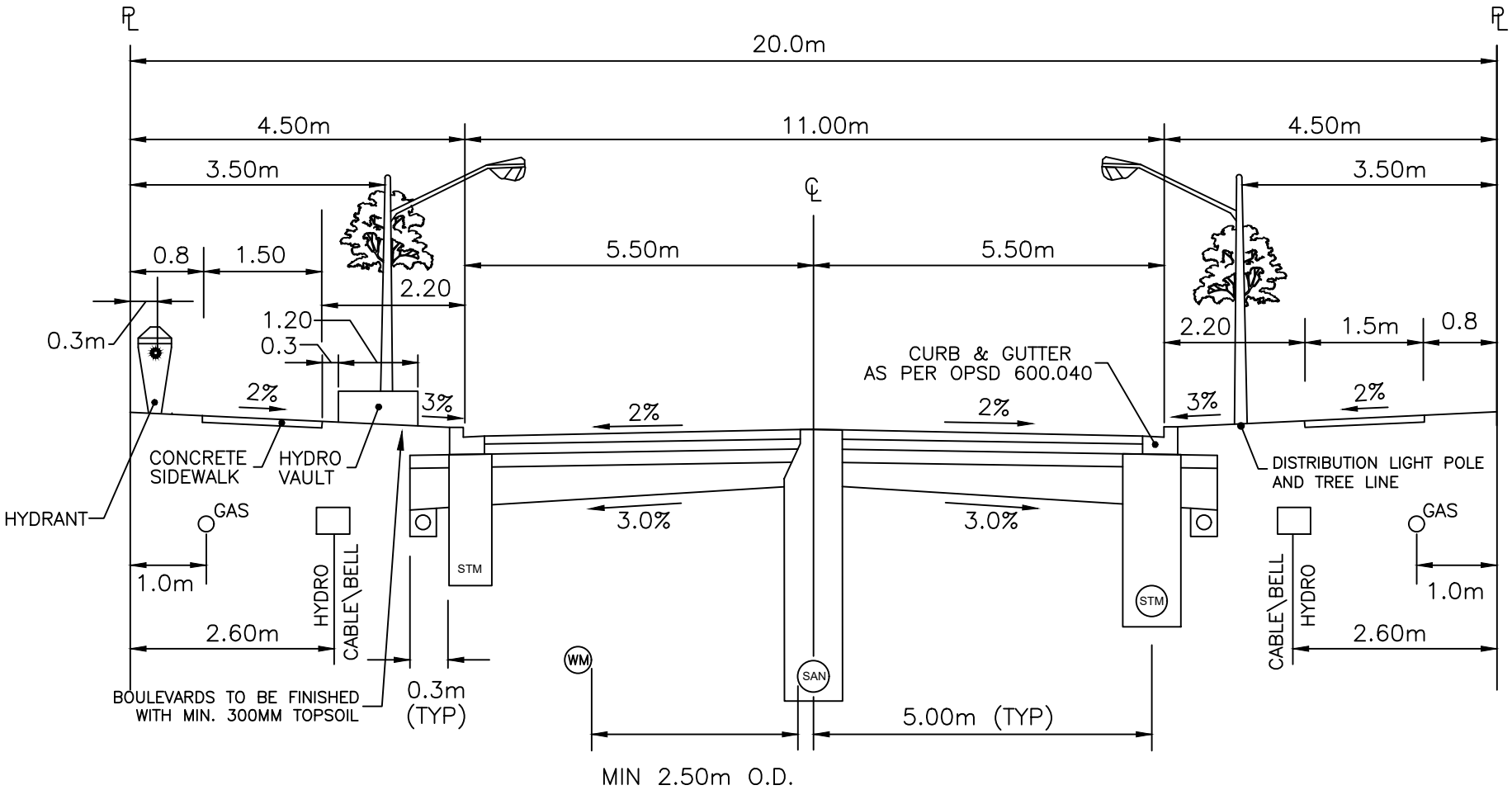

NOTES:

1. ALL DIMENSION IN METERS.(UNLESS NOTED)
2. SUBDRAIN SHALL BE 150mm PERFORATED PIPE c/w SOCK AND MASONARY SAND (TYP.)
3. MINIMUM DEPTH OF COVER

STORM SEWER	1.50m
SANITARY SEWER	2.80m
WATERMAIN	2.00m
GAS MAIN	0.75m IN BLVD.
HYDRO/BELL/CABLE	1.00m IN BLVD.

4. CURB STOP VALVES AT PROPERTY LINE (PREFERRED LOCATION OUT OF DRIVEWAY)
5. HYDRANT VALVES LOCATED 0.50m BEHIND CURB
6. MINIMUM DEPTH OF COVER FOR SERVICE LATERALS AT PROPERTY LINE.

STORM SERVICE	1.30m
SANITARY SERVICE	2.50m
WATER SERVICE	1.80m

7. THE FOLLOWING IS A MINIMUM ROAD BASE AND WILL REQUIRE A SOILS REPORT VERIFICATIONS TO DERMINE IF ADDITIONAL THICKNESS IS REQUIRED.

50mm HL3
100mm HL4
200mm GRANULAR 'A'
600mm GRANULAR 'B'

20.0m MINOR COLLECTOR ROW

TOWNSHIP OF WILMOT
PUBLIC WORKS AND ENGINEERING DEPARTMENT

DATE: FEBRUARY 2022

SCALE: N.T.S.

DWG No.: WIL-DET-22-35 | REV: 0

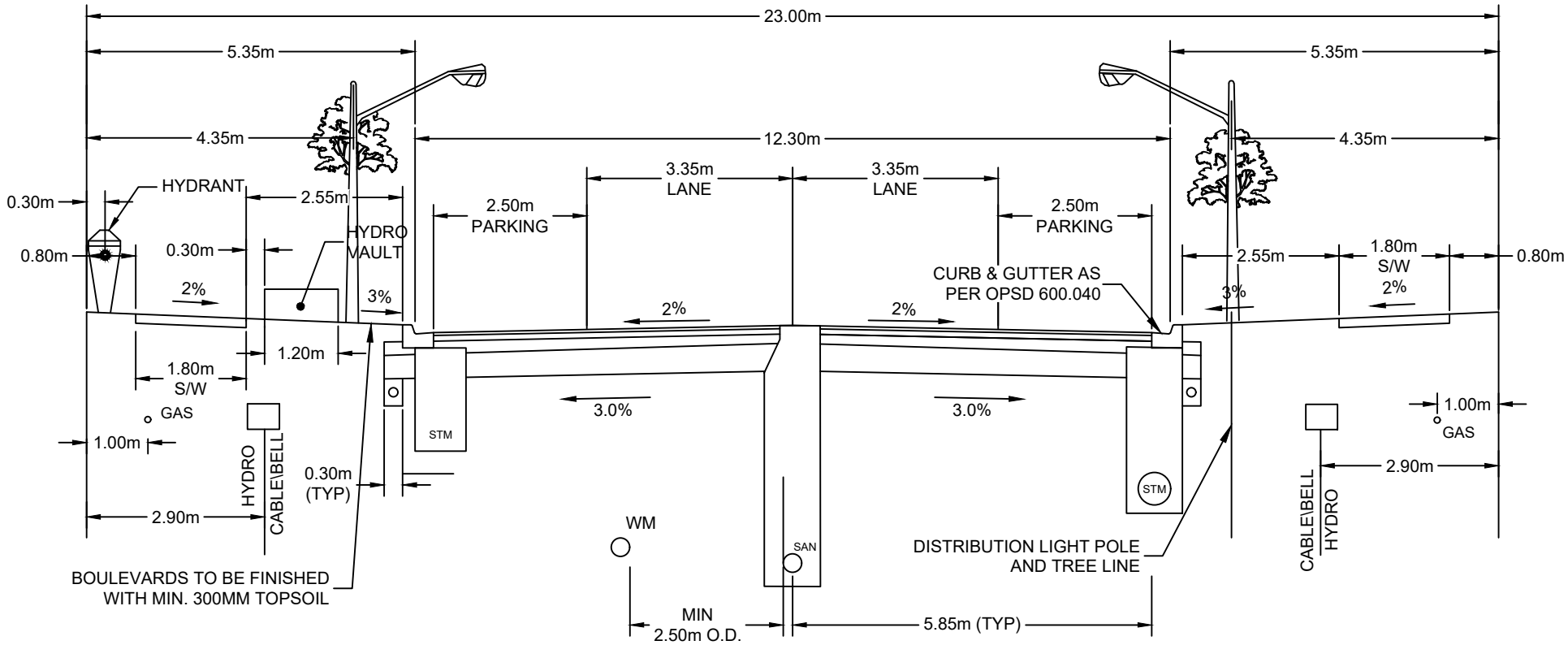

NOTES:

1. ALL DIMENSION IN METERS (UNLESS NOTED).
2. SUBDRAIN SHALL BE 150mm PERFORATED PIPE c/w SOCK AND FINE AGGERGATE BEDDING PER OPSS 1002.
3. MINIMUM DEPTH OF COVER

STORM SEWER	1.50m
SANITARY SEWER	2.80m
WATERMAIN	2.00m
GAS MAIN	0.75m IN BLVD.
HYDRO/BELL/CABLE	1.00m IN BLVD.

4. CURB STOP VALVES AT PROPERTY LINE (PREFERRED LOCATION OUT OF DRIVEWAY, IF LOCATED IN DRIVEWAY REFER TO TOWNSHIP OF WOOLWICH FROST COLLAR DETAIL)
5. HYDRANT VALVES LOCATED 0.50m BEHIND CURB
6. MINIMUM DEPTH OF COVER FOR SERVICE LATERALS AT PROPERTY LINE.

STORM SERVICE	1.30m
SANITARY SERVICE	2.50m
WATER SERVICE	1.80m

7. THE FOLLOWING IS A MINIMUM ROAD BASE AND WILL REQUIRE A SOILS REPORT VERIFICATIONS TO DERMINE IF ADDITIONAL THICKNESS IS REQUIRED.
   - 50mm HL3
   - 100mm HL4
   - 200mm GRANULAR 'A'
   - 600mm GRANULAR 'B'

23.0m URBAN COLLECTOR ROAD R.O.W. CROSS SECTION

TOWNSHIP OF WILMOT
PUBLIC WORKS AND ENGINEERING DEPARTMENT

DATE: FEBRUARY 2022

SCALE: NTS

DWG No.: WIL-DET-22-36 | REV: 0

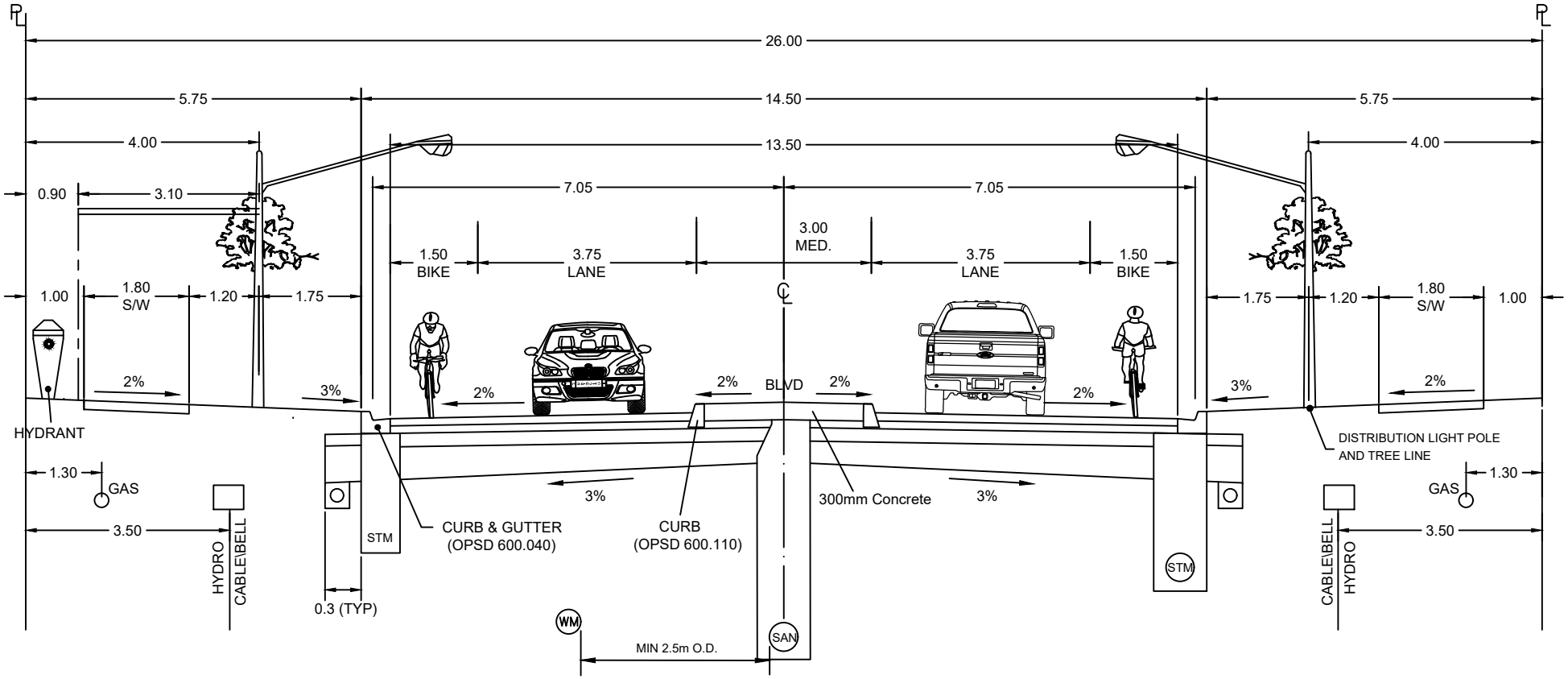

NOTES:

1. ALL DIMENSION IN METRES.(UNLESS NOTED)
2. SUBDRAIN SHALL BE 150mm PERFORATED PIPE c/w SOCK AND MASONARY SAND (TYP.)
3. MINIMUM DEPTH OF COVER

STORM SEWER	1.50m
SANITARY SEWER	2.80m
WATERMAIN	2.00m
GAS MAIN	0.75m IN BLVD.
HYDRO/BELL/CABLE	1.00m IN BLVD.

4. CURB STOP VALVES AT PROPERTY LINE (PREFERRED LOCATION OUT OF DRIVEWAY)
5. HYDRANT VALVES LOCATED 0.50m BEHIND CURB
6. MINIMUM DEPTH OF COVER FOR SERVICE LATERALS AT PROPERTY LINE.

STORM SERVICE	1.30m
SANITARY SERVICE	2.50m
WATER SERVICE	1.80m

7. THE FOLLOWING IS A MINIMUM ROAD BASE AND WILL REQUIRE A SOILS REPORT VERIFICATIONS TO DERMINE IF ADDITIONAL THICKNESS IS REQUIRED.

50mm HL3
100mm HL4
200mm GRANULAR 'A'
600mm GRANULAR 'B'

26.0m MAJOR COLLECTOR ROW

TOWNSHIP OF WILMOT
PUBLIC WORKS AND ENGINEERING DEPARTMENT

DATE: FEBRUARY 2022

SCALE: N.T.S.

DWG No.: WIL-DET-22-37 | REV: 0

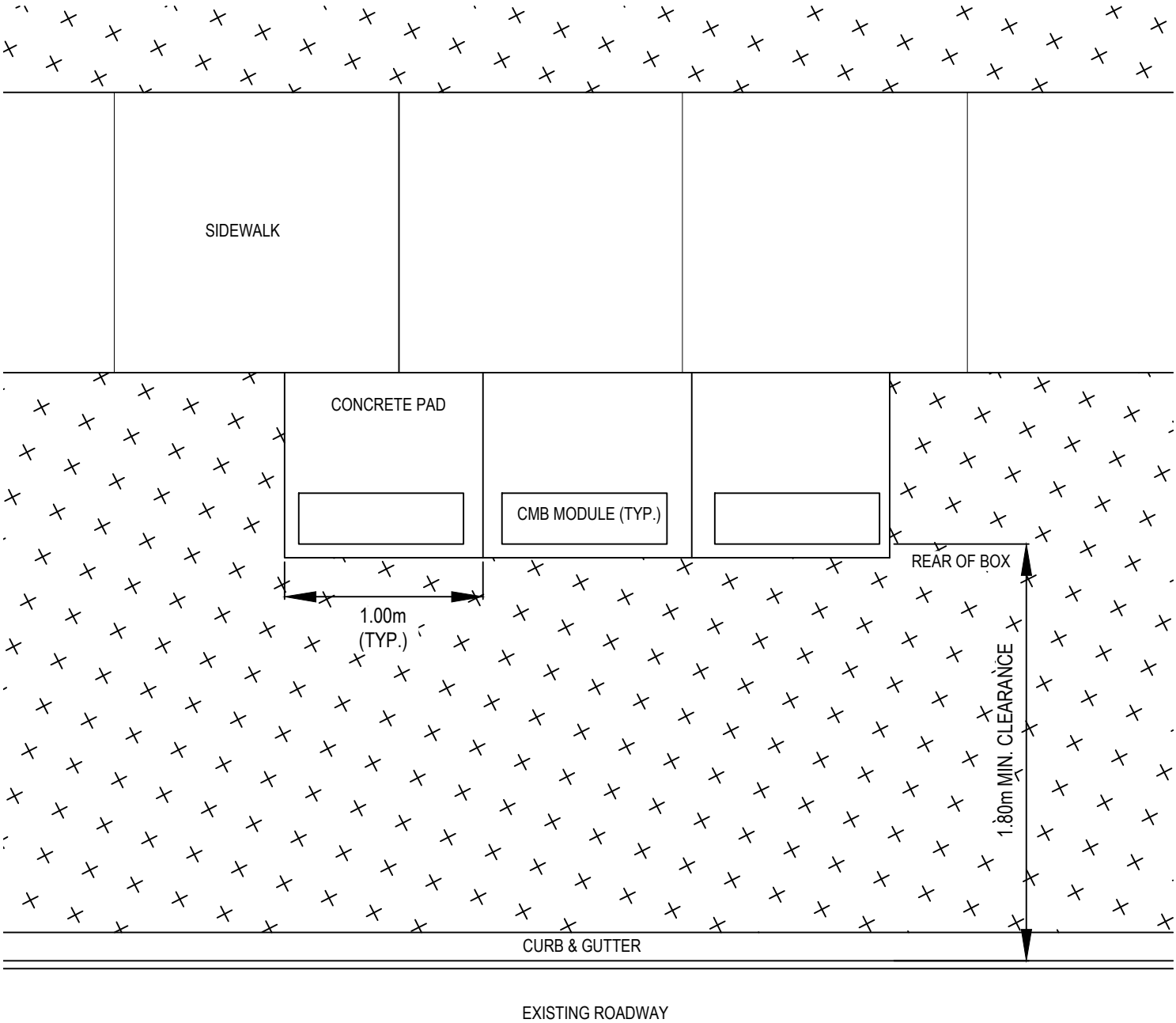

NOTES:

1. ALL UNDGERGROUND UTILITIES TO BE LOCATED BEFORE ANY EXCAVATION IS PERMITTED. IN THE EVENT OF ANY UTILITIES PRESENT, GUIDANCE MUST BE FOLLOWED.
2. ALL DIMENSIONS ARE IN METRES UNLESS OTHERWISE STATED.
3. DRAINAGE MUST BE DIRECTED AWAY FROM ACCESS AND PAD. WATER CAN NOT POOL AT SITE.
4. MAILBOX INSTALLATION AS PER CANADA POST STANDARDS.

COMMUNITY MAILBOX (CMB) DETAIL		TOWNSHIP OF WILMOT PUBLIC WORKS AND ENGINEERING DEPARTMENT
		DATE: FEBRUARY 2022
		SCALE: NTS
		DWG No.: WIL-DET-22-38 REV: 0

PLAN

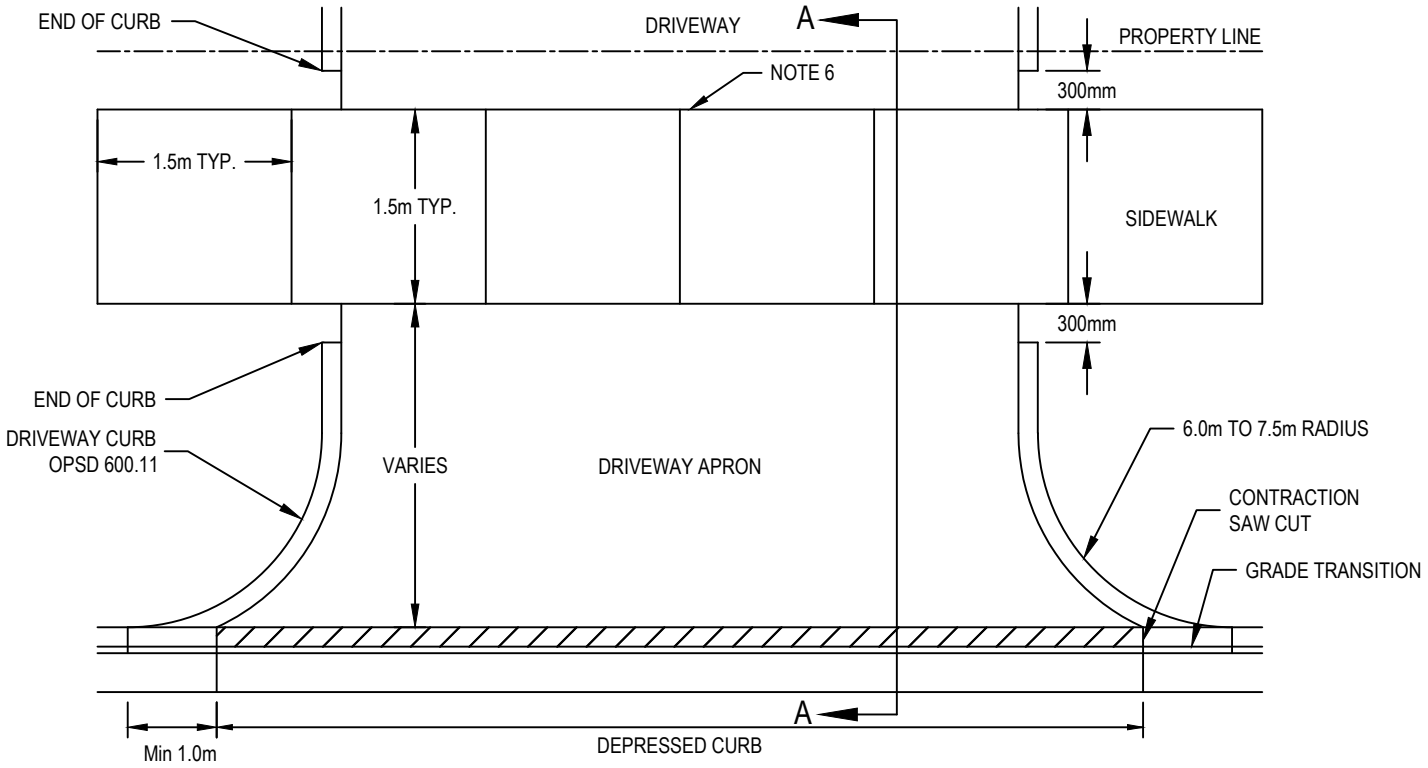

ELEVATION

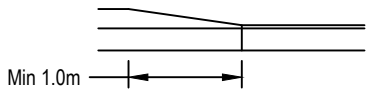

SECTION 'A-A'

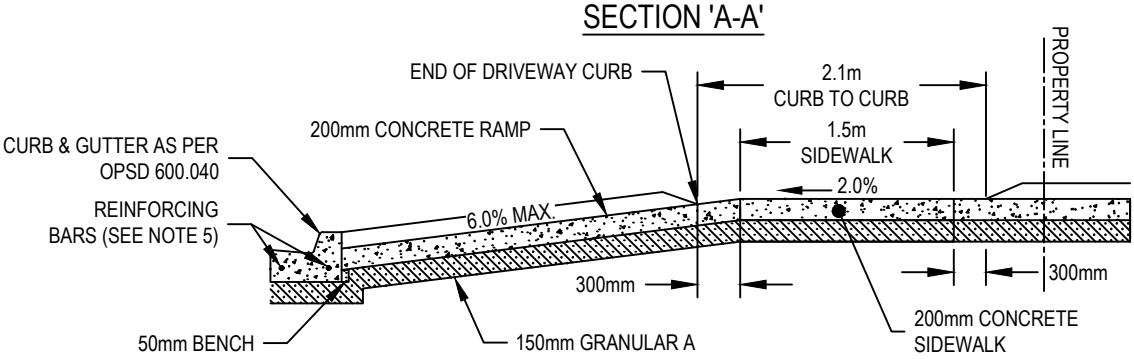

NOTES:

1. ALL TOPSOIL AND SOD TO BE REMOVED FROM LIMITS OF PROPOSED DRIVEWAY.
2. GRANULAR TO BE COMPACTED TO 100% S.P.D.
3. MAXIMUM DRIVEWAY GRADE: 6.0%.
4. THICKNESS OF CONCRETE SIDEWALK AT DRIVEWAYS SHALL BE 200mm.
5. 2-15M REINFORCING BARS SHALL BE PLACED AT A HEIGHT OF 50mm ABOVE THE BOTTOM OF THE CURB AND GUTTER, ONE 76mm FROM THE FRONT FACE, AND ONE 76mm FROM THE BACK.
6. EXPANSION JOINT MATERIAL SHALL BE INSTALLED AT THE BACK OF THE SIDEWALK.
7. ALL DIMENSIONS ARE IN MILLIMETERS UNLESS OTHERWISE SPECIFIED.

INDUSTRIAL / COMMERCIAL DRIVEWAY ENTRANCE		TOWNSHIP OF WILMOT PUBLIC WORKS AND ENGINEERING DEPARTMENT
		DATE: FEBRUARY 2022
		SCALE: NTS
		DWG No.: WIL-DET-22-39 REV: 0

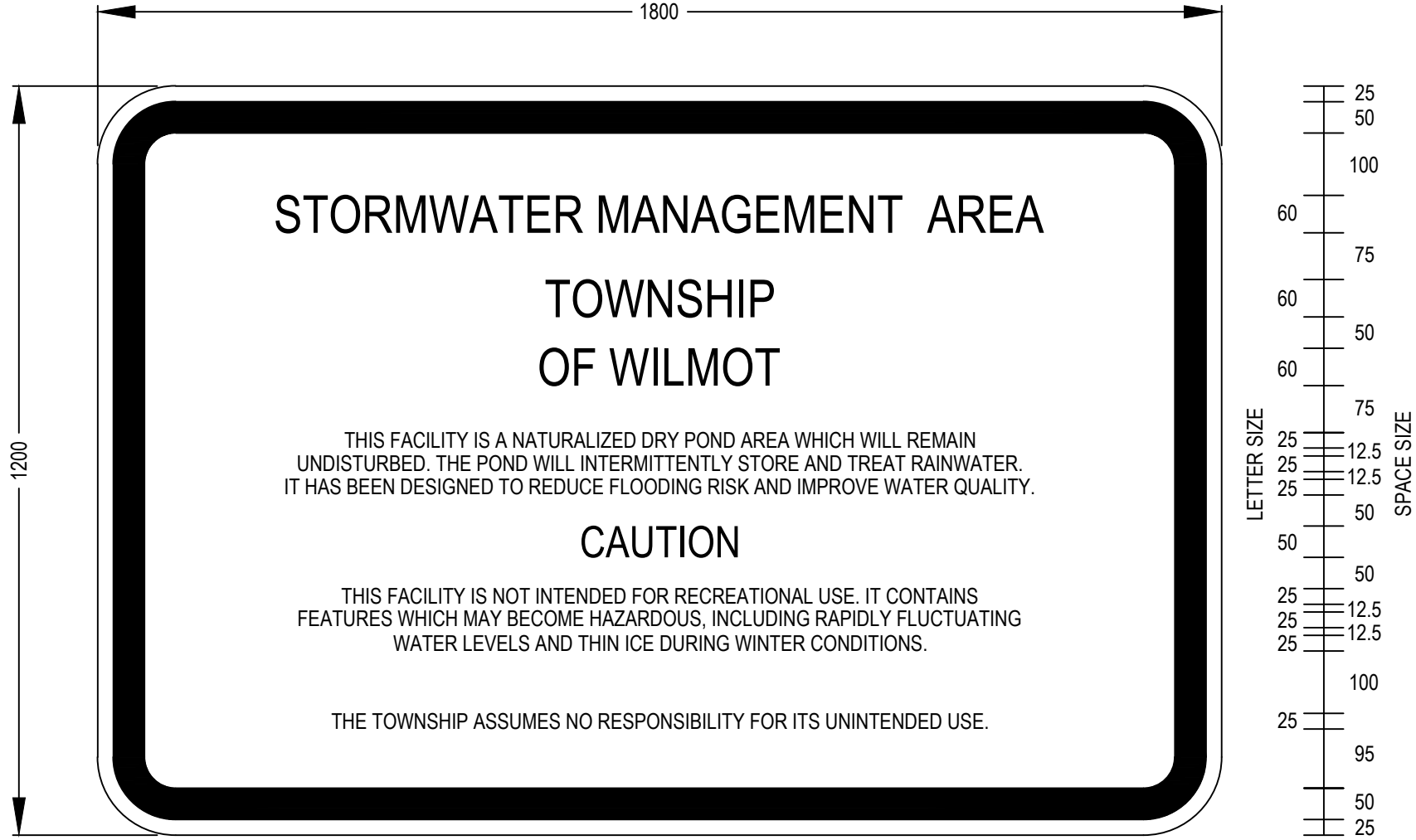

NOTE:

1. SIGN TO BE PAINTED WITH ROYAL BLUE LETTERS AND BORDERS.
2. SIGN TO BE SUPPLIED AND MOUNTED BY THE CONTRACTOR.
3. SIGN TO BE MOUNTED ON 100mm x 100mm WOOD POSTS WITH SUITABLE FRAMING. POSTS TO BE SUPPLIED AND INSTALLED BY THE CONTRACTOR.
4. SIGN TO BE CONSTRUCTED OF 20mm THICK PLYWOOD TO THE DIMENSIONS SHOWN.

STORMWATER MANAGEMENT AREA SIGN

TOWNSHIP OF WILMOT
PUBLIC WORKS AND ENGINEERING DEPARTMENT

DATE: FEBRUARY 2022

SCALE: NTS

DWG No.: WIL-DET-22-40 | REV: 0

NOTES:

1. CONCRETE CHAMBER AS PER OPSD 1108.010 OR PRECAST EQUIVALENT.
   - ADJUSTMENT UNITS FOR FRAME INSTALLATION WILL NOT BE PERMITTED, ONE PIECE CONSTRUCTION ONLY (MAX HEIGHT 1.0m)
   - ONE PIECE ADJUSTMENT UNIT MUST EXTEND MINIMUM 100mm TO MAXIMUM 300mm ABOVE FINISHED GRADE.
   - FRAME TO BE POURED INTO CONCRETE RISER.
2. ACCESS FRAME MUST BE LOCKABLE AND COVER SHALL BE BILCO TYPE J-AL (1050mm x 1050mm MIN.) OR APPROVED EQUIVALENT. 2.0m CLEARANCE TO BE MAINTAINED AROUND ENTRANCE FRAME.
3. CONCRETE CHAMBER TO BE APPROPRIATELY SIZED AND INSTALLED IN A LANDSCAPED AREA.
4. 350mm CLEARANCE TO BE MAINTAINED FROM CHAMBER FLOOR.
5. CONCRETE SUPPORTS TO BE UNDER ALL VALVES AND METER.
6. BY-PASS LINE SIZE TO BE SAME SIZE AS THE METER LINE, BE IN CLOSED POSITION, AND SEALED BY THE TOWNSHIP.
7. METER CHAMBER MUST BE WATERPROOF AND BE SELF DRAINING.
8. DOUBLE CHECK DETECTOR ASSEMBLY TEST PORTS TO BE PLUGGED USING MEANS THAT IS WATER TIGHT AND INSTALLATION MUST COMPLY WITH THE REGION OF WATERLOO BACKFLOW PREVENTION BY-LAW.
9. NO CONNECTION FOR AN IRRIGATION OR OTHER TYPES OF EQUIPMENT ARE PERMITTED WITHIN CHAMBER.
10. IF A BACKFLOW DEVICE IS REQUIRED, A SEPARATE CHAMBER IS REQUIRED.
11. A FLUSH MOUNT ACCESS HATCH IS AN ACCEPTABLE INSTALLATION WITHIN A WALKWAY, PROVIDING A BILCO LU-2 GALVANIZED LADDERUP SAFETY POST IS INSTALLED AT THE ENTRANCE.
12. VEHICLES MAY NOT PARK WITHIN 2.0m OF THE CHAMBER.
13. BACKFLOW PREVENTER TO BE ON "UPSTREAM' SIDE OF METER.
14. ALL METALLIC PIPE AND FITTINGS ARE TO BE WRAPPED AS PER DGSSMS.
15. TRACER WIRE TO BE CONNECTED TO PIPE AND FITTINGS AS PER DGSSMS. THE WIRE IS TO EXTEND TO MH LID AND EXCESS WRAPPED AROUND LADDER RUNG.
16. MAINLINE WATER METER TO BE SUPPLIED BY THE APPLICANT. WATER METER TO BE AN ELECTROMAGNETIC METER MANUFACTURED BY SENSUS, MODEL HYDROVERSE METER OR APPROVED EQUIVALENT. MANUFACTURER AND MODEL NUMBER TO BE PROVIDED TO THE TOWNSHIP ON REVIEW AND ACCEPTANCE.

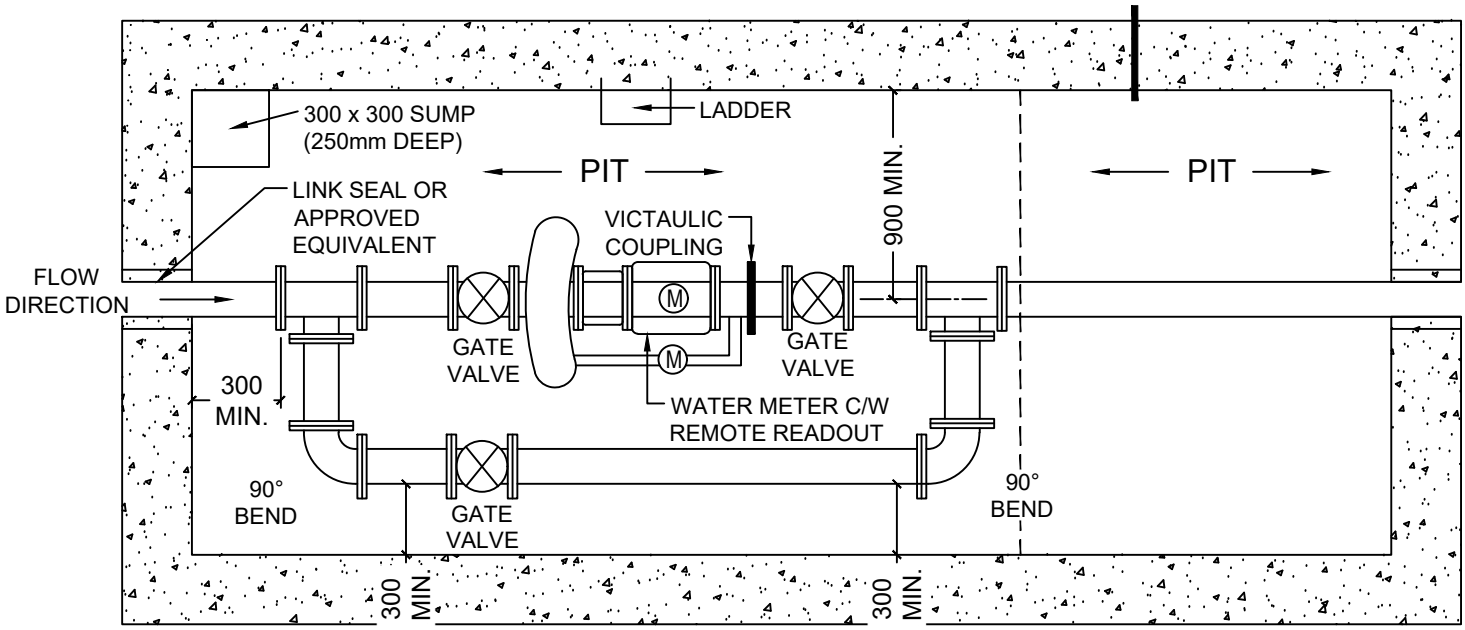

TYPICAL WATER METER INSTALLATION

TOWNSHIP OF WILMOT
PUBLIC WORKS AND ENGINEERING DEPARTMENT

DATE: MARCH 2022

SCALE: NTS

DWG No.: WIL-DET-22-41 | REV: 0

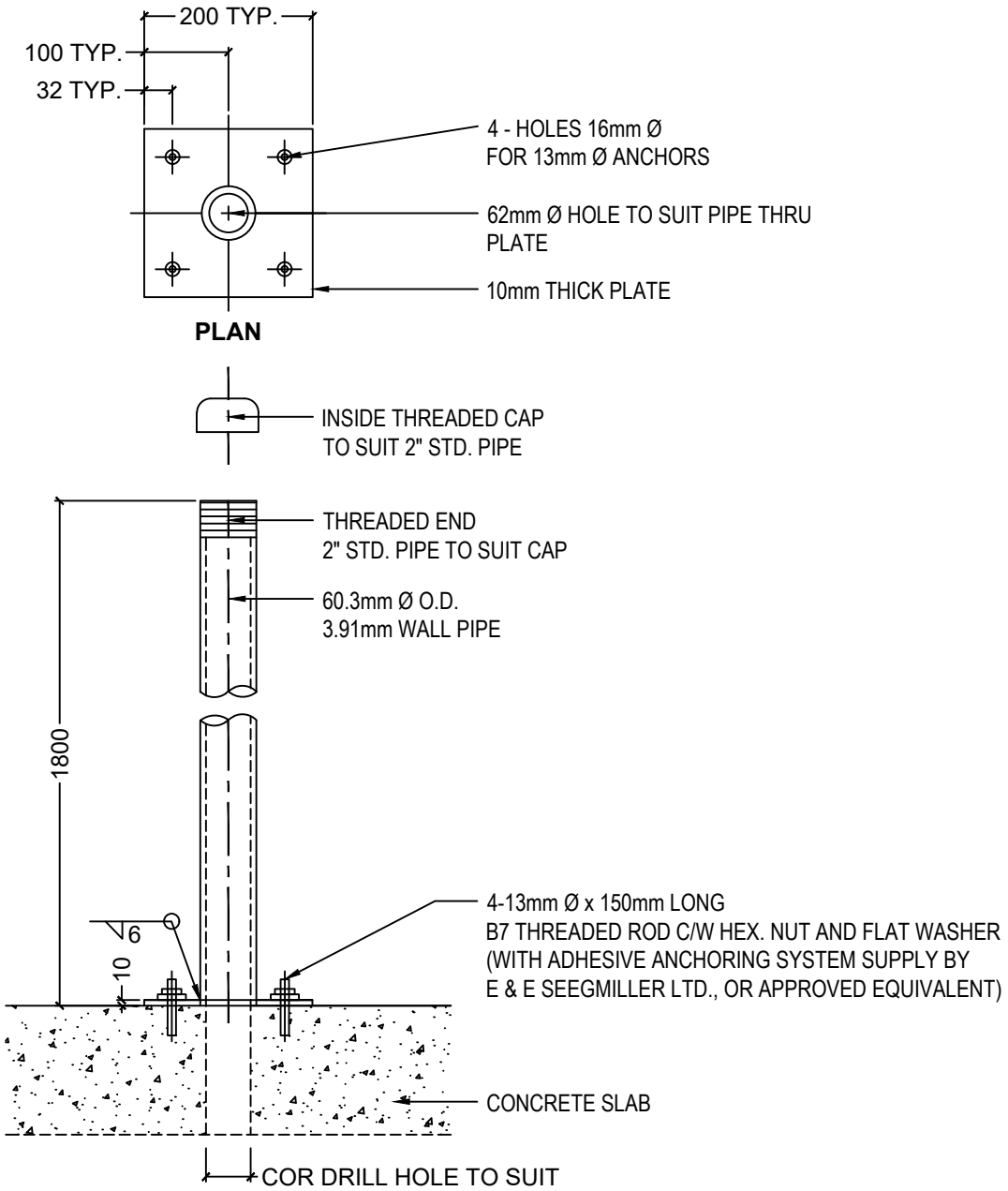

NOTES:

1. PIPE SHALL BE ACCORDING TO ASTM A 53M, GRADE B.
2. PLATES SHALL CONFORM TO G40.20/G40.21, GRADE 300W.
3. WELDING SHALL CONFORM TO THE LATEST ISSUE OF CSA SPECIFICATION W59.
4. PIPE SHALL BE HOT DIP GALVANIZED ACCORDING TO ASTM A123 AFTER FABRICATION.
5. CALL 519-634-8525 FOR ASSISTANCE.

REMOTE MOUNTING POST:

6. MUST BE A 50mm GALVANIZED PIPE, NO LESS THAN 4' AND NO MORE THAN 5' ABOVE FINISHED GRADE, THREADED ON TOP AND SUPPLIED WITH A CAP TO FIT.
7. AT NO TIME CAN THIS POST BE STRAPPED TO THE SIDE OF THE CHAMBER.
8. REMOTE ELECTRONIC READERS ARE TO BE PURCHASED FROM THE TOWNSHIP AT THE TIME OF BUILDING PERMIT APPLICATION.

REMOTE MOUNTING POST DETAIL

TOWNSHIP OF WILMOT
PUBLIC WORKS AND ENGINEERING DEPARTMENT

DATE: MARCH 2022

SCALE: NTS

DWG No.: WIL-DET-22-42 | REV: 0

	Water Meter Policy
	Section:
	Policy # **Pg. 1 of 4**
Revision Date:	Issue Date:
Approved by:	Review Date:

PURPOSE

The Purpose of this document is to outline Township of Wilmot Utilities requirements and responsibilities for properties requiring water meters, multi-metering and meter chambers.

SCOPE

Ontario Building Code article 7.6.1.3(5) states where a water supply is to be metered, the installation of the meter, including the piping that is part of the water meter installation and the valving arrangement for the meter installation, shall be in accordance with the water purveyor's requirements.

This policy and procedures shall be applied to all properties in the Township of Wilmot where a water service (domestic and fire) is provided from the distribution system to the property where a water meter or meter chamber is to be installed.

DEFINITIONS

- **Ontario Building Code –** the regulation governing building construction in Ontario
- **Water Supply –** source water provided by local Municipality
- **Multi Metering (sub - metering) –** is water meters installed into individual units within a development.
- **Water meter –** an instrument for recording the quantity of water passing through an outlet**:** a machine that measures how much water is used in a building
- **ERT –** Encoder Receiving transmitter
- **Meter chambers –** is an inspection chamber for water meter assemblies, the chamber can be installed anywhere where a water meter cannot be installed inside a building or where the place to affix the water service pipe is too far from the building**.**

- **Secondary water meters means –** Privately owned water meter that measures other units in a building that is installed after the Municipal water meter.
- **Water Purveyor –** The Supervisor of the Water Utility which has a Ministry of the Environment and Conservation and Parks license equal to or greater than the class of the municipal system and designated by the Municipal owner. Also referenced as the Overall Responsible Operator (ORO).

STANDARDS AND PROCEDURES

Multi Metering

One (1) Township owned meter will be placed in each single family residential, multi-family residential, commercial, industrial and institutional Property, (one water service-one meter) unless approved by the Township with the following exceptions:

- Street facing dwellings, individually owned and containing a municipal address with a separate water service from the primary watermain and no interconnected plumbing. (ie. street fronting row housing); or
- Existing multi-metered properties.

All Water Meters including an Encoder Receiver Transmitter (ERT) must be installed prior to occupancy. The size, type and manufacturer of the Water Meter shall be approved by the Township's Utility Department, prior to installation.

All water used in the above-mentioned property will pass through such meter and the owner of the property shall be held liable for water charges.

Secondary meters may be purchased for the convenience of the owner, as in apartment houses or multiplexes, at the owner's request and expense. All secondary meters shall be installed in a manner so that all water supplied passes through the Township meter prior to passing through the secondary meter. Secondary meters shall not be read or billed separately or maintained by the Township. For properties that have cistern(s) an additional meter must be purchased and installed for calculation of sewage discharge.

A shut off valve shall be installed immediately adjacent to the point at which the water connection enters the Premises. This valve shall be located in a readily accessible area. The installation and maintenance will be at the expense of the Property Owner / Builder.

All connections supplying water from the Water Systems, for potable / fire use, shall be equipped with a Water Meter immediately adjacent to the shut off.

Both the Water Meter and the ERT shall be in locations which is always readily accessible to the Township for the purposes of obtaining a reading from said meter.

Water Meters shall be installed inside a heated building unless otherwise determined by the Township's Utility Department.

The Township shall maintain, repair or replace all Township owned Water Meters, as deemed necessary. No other person shall remove a Water Meter for any reason, except for the Township. If it is determined that a Water Meter fails as a result of tampering or negligence as determined by the Township, full cost recovery for such repair or replacement shall be that of the Property Owner.

Meter Chambers

If the Township receives an application/permit for a new water service and determines that the Water Meter cannot be located inside the building or structure in accordance with the Township's Standards, and / or Properties with multiple buildings the Township Public Works and Engineering Department may approve the installation of the Water Meter in a Water Meter chamber.

The Water Meter chamber shall be supplied and installed at the Owner's expense. The Water Meter chamber shall meet Township Standards. The Township will own the Water Meter, however the Owner shall retain ownership of the Water Meter chamber and any valves, including Backflow Valves if required.

For properties that have a water service of 30m or more from the watermain to the house a meter pit will be required to be installed at the property line or as per Township requirements.

Water meter chambers shall be located at or near the Property line of the property, unless the Director of Public Works and Engineering has given approval for an alternative location.

No Owner shall have access to a Water Meter chamber other than a person authorized by the Township.

Meter Set Drawings

Applicant is to provide meter set drawings through plan submission process showing but not limited to installation, material, and design requirements for the site. Typical standard meter set drawings attached.

Policy # CA-001

ASSOCIATED DOCUMENTS

- Meter Chamber Drawing & Details – Std. Dwg. No. WIL-DET-41
- Remote Mounting Post Detail – Std. Dwg No. WIL-DET-22-42
- Ontario Building Code Act

RESPONSIBILITIES

Engineering

- Review, inspect and accept of servicing plans for site plans and subdivision development
- Issues Permits
- Follows Design Guidelines and Supplemental Specifications for Municipal Services (DGSSMS), OPSS MUNI, MOECP, Drinking water legislation

Utilities

- Review servicing site plans
- Follows Administration Policy
- Supplies meter, final inspection once installed
- Maintains and repairs infrastructure
- Follows DGSSMS, AWWA C651-14, MOECP, OPSS MUNI

Development Services

- Infil and site plan approval authority
- Review / coordinates subdivision applications
- Incorporates Administration Policy to all development permits
- Reviews, accepts, issues permits, inspects under the OBC specifically part 7 on site servicing projects.
- Collects meter fees

COMMUNICATION

Engineering – Permit process

Development Services – Developer agreements, building permit processes.

Utility – meter supplier, site inspections, installation, maintenance and repair infrastructure.

Company Letterhead

Month DD, YYYY

Email only

Public Works and Engineering

Township of Wilmot
60 Snyder's Road West,
Baden, ON N3A 1A1

Attention Engineering Department

Permit No.: XXXX

Regarding: Final Lot Grading Certification
Project Name – Developer Name

On behalf of Developer Name, we have inspected the finished lot grading for the following lot, in conjunction with the review of the approved stamped plan.

Lot No.	Civic Address	Date Inspected	Conforms to Grading Control Plan dwg #xxxxxxx revision date xxxx
XX	XX Snyder's Road East	Month DD, YYYY	Yes

We hereby certify that the grading for the above lot generally conforms to the proposed grades as shown on the stamped Engineering plans and / or the overall Grading Plan stamped dated XXXXXX revision #XXXXX, to support drainage of the lot and abutting lands. We hereby certify that the proposed lot drainage and / or grading plan have been designed and constructed in accordance with drainage common law in Ontario, sound engineering principles and the Ontario Building Code Articles such as but not limited to 9.14.6.1 & 9.15.4.6. We ensure artificially collected and / or surface drainage will not adversely affect adjacent properties.

In addition, all required stormwater devices (dry-wells, ditch inlets, piping, etc), all roof leaders/downspouts and sump pump outlets have been installed in accordance with the approved plan and function correctly.

We trust the above is in order; however, should you have any questions, please do not hesitate to contact the undersigned.

Sincerely,

Signature & Stamp
Position
Company name
Contact Information

SCHEDULE D

COST OF SERVICES TO BE INSTALLED BY SUBDIVIDER
PHASE xxx

SECTION	ITEMS	COST
A	SITE PREPARATION	$
B	EARTHWORKS	$
C	STORMWATER MANAGEMENT WORKS	$
D	STORMWATER MANAGEMENT FACILITY LANDSCAPING	$
E	STORMWATER MANAGEMENT FACILITY CLEANOUT	$
F	SANITARY SEWER	$
G	STORM SEWER	$
H	WATERMAIN	$
I	ROAD & SURFACE WORKS	$
J	PARK & TRIAL WORKS & LANDSCAPING	$
K	BOULEVARD LANDSCAPING	$
L	MISCELLANEOUS	$
M	DEVELOPMENT CHARGE ITEMS ELIGIBLE	$
	SUBTOTAL	$
	ENGINEERING (15%)	$
	CONTINGENCY (15%)	$
	SUBTOTAL + ENGINEERING + CONTINGENCY	$
	HST (13%)	$
	TOTAL COST	**$**

Note:

1. A more detailed breakdown of the cost/unit prices of the required public works for Sections XXXX are detailed in a document prepared by XXXXX dated XXXXX.

Township of Wilmot
Survey Monument Record Sheet

WI-1$COUNTY$003$3$
$$363.613$

Tablet is set in concrete pier on south side of Regional Road No. 12, 17.7m southeast of intersection of Regional Road No. 12 and Regional Road No. 10 (Stoesser's Corner), 85cm north from fence, 6.58m west from hydro pole, 11.9m southwest of quadruple cherry tree and 8.8m southeast of 25 maple, to the
westerly tree of line of 3 maples on south side of Regional Road No. 12.

WI-2$TOPO$670135$1$
$$395.34$

Topographical Survey tablet in a concrete pier 0.3m in diameter and at ground level, on southwest side of Waterloo Township Road No. 41, 1.2 km southeast from Waterloo Township Road No. 52, on top of a high wooded hill, 29.9m south from centre of intersection of laneway leading to a grey bungalow (residence of Finley) and Township Road No. 41, 79.6m northwest of a telephone pole, 6.1m southwest from centreline of road.

WI-3DHO65-210$1$
$$375.563$

Two storey red brick house (residence of D. Quibell) on the south side of Regional Road No. 6, being 3.5 km east of Emmanuel Lutheran Church in the Village of Petersburg; 3.1 km west of intersection of Regional Road No. 6 and Fischer Drive at the west end of the City of Kitchener. House is 53.6m east of junction of Hwy. No. 7 and Waterloo Road No. 41, and 19.5m south of centreline of Regional Road No. 6. Tablet is set horizontally in the east face of concrete foundation, being 6.71m south of northeast corner and 0.37m below first course of brickwork.

WI-4DHO65-211$1$
$$356.964$

Frame barn (owned by P. Distler) on the north side of Regional Road No. 6, being 1.9 km east of Emmanuel Lutheran Church in the Village of Petersburg, and 33.5m north of centreline of road. Tablet is set horizontally in east face of concrete foundation, being 4.79m north of southeast corner and 1.52m below bottom of framework.

WI-5DHO65-212$1$
$$365.615

Red brick schoolhouse (S.S. No. 14) on the north side of Regional Road No. 6, being 0.4 km east of Emmanuel Lutheran Church in the Village of Petersburg, and 26.5m north of centreline of road. Tablet is set horizontally in east face of concrete foundation, being 0.76m south of northeast corner and 0.15m below the first course of brickwork.

WI-6DHO65-213$1$
$$363.420$

Two storey red brick house (residence of Mr. Knipfel) on the south side of Regional Road 6, being 243.8m west of Emmanuel Lutheran Church in the Village of Petersburg, and 20.7m south of centreline of highway. Tablet is set horizontally in the west face of the concrete foundation, being 4.88m south of the northwest corner, and 0.37m below the first course of brickwork.

WI-7DHO65-214$1$
$$380.163$

One and one-half storey frame house (residence of A. White) on the north side of Regional Road 6, being 2.6 km east of the public school in the Village of Baden; 2.1 km west of Emmanuel Lutheran Church in the Village of Petersburg; 1.2 km east of the east junction of Regional Road 6, and 23.2m north of centreline of highway. Tablet is set horizontally in the west face of concrete foundation, being 4.88m north of southwest corner, and 0.70m below bottom of framework.

WI-8DHO65-215$1$
$$376.692$

One storey frame "Green Hills" Motel (owned by E. Ryman) on the south side of Regional Road 6, being 1.9 km east of the public school in the Village of Baden; 0.5 km east of east junction of Old Hwy. 7, 8 and 7B, 8B, and 92.7m south of centreline of highway. Tablet is set horizontally in west face of concrete foundation, being 2.50m south of the northwest corner, and 0.21m below bottom of framework.

WI-9$TOPO$670373$1$
$$435.43$

Topographical Survey tablet in a concrete pier 0.3m in diameter, at ground level, on top of Baden Hill, on south of Regional Road 6 and approximately 60.0m above Regional Road 6, 1.3 km east from junction of Old Highways 7 and 8 with Highways 7B and 8B, 19.5m southeast from southwest corner of stone building, 14.1m northwest of northwest corner of wire link fence enclosing largest tower, 1.6m south of third signal post from the largest tower, 1.7m west from second signal post.

WI-10$TOPO$101-F1
$$360.626$

C.N.R. Brick arch culvert 1.6 km east of station and at 114.63 km from Toronto, 30.5m west of road allowance between Lots 12 and 13, Township of Wilmot; bolt in east face of stone coping of north headwall.

WI-11DHO65-216$1$
$$357.788$

Yellow brick split-level house (residence of E. Honderich) on the north side of Old Hwy. 7B and 8B, being 0.8 km east of the public school in the Village of Baden, and 33.8m north of centreline of highway. Tablet is set horizontally in west face of concrete foundation, being 0.64m south of northwest corner and 1.22m below first course of brickwork.

WI-12DHO65-218$1$
344.178

Three storey red block building (owned by Waterloo County Co-op) on the west side of Foundry Street in the Village of Baden, being 0.4 km south of junction of Old Hwy. 7B, 8B and Foundry Street, and 0.5 km north of junction of Regional Road 6 and Foundry Street. Tablet is set horizontally in the east face of concrete foundation, being 11.0m from centreline of Foundry Street; 8.66m south of the northeast corner, and 2.19m below blockwork.

WI-13DHO65-219$1$
$$347.919$

Concrete culvert under Regional Road 6, being 1.2 km west from junction of Regional Road 6 and Foundry Street, south of the Village of Baden. Tablet is set horizontally in the north end of culvert, being 0.15m west from northeast corner of culvert, and 0.52m below the top.

WI-14DHO92-67$1$
$$385.876$

One storey brown brick house (owned by L. Hagen) on the west side of gravel road between Lots 12 and 13, Township of Wilmot, being 0.8 km east of the Public School in the Hamlet of Baden along Old Hwy. 7 and 8B, hence 1.0 km south along road between Lots 12 and 13 and 33.5m west of centreline of gravel road. Tablet is set horizontally in the west (rear) face of stone and concrete flower planter at the extreme southeast corner of house, being 0.15m north of the southwest corner of planter and 0.21m below stonework.

WI-15DHO65-217$1$
$$350.635$

Two storey red brick post office and dwelling (owned by A. Everts) on the south side of Old Hwy. 7B and 8B, being 0.4 km west of the public school in the Village of Baden, and 12.0m south of centreline of highway. Tablet is set horizontally in the east face of concrete foundation, being 3.35m south of northeast corner and 0.15m below stucco facing.

WI-16$COUNTY$020$3$
$$347.905$

Tablet is set vertically in north face of northwest corner of Steinman Mennonite Church in northeast corner of intersection of Regional Road 5 and Regional Road 1.

WI-17$COUNTY$016$3$
$$339.882$

Concrete bridge over Nith River on Regional Road 5 south of Phillipsburg. Tablet set in east end of south pier on top of pier.

WI-18$COUNTY$017$3$
$$338.219$

Concrete bridge over Nith River on Waterloo Regional Road 9, east of Phillipsburg. Tablet set vertically in north face of northwest corner of east abutment.

WI-19$COUNTY$027$3$
$$366.920$

Tablet set vertically in north face of northeast corner of Ohmer Jantzi's Barn in southwest corner of intersection of Regional Road 5 and Wilmot Township Road No. 2, second set of buildings west of intersection (New Prussia - opposite former Wellesley S.S. No. 8).

WI-20$COUNTY$018$3$
$$347.490$

Concrete bridge over Nith River on Regional Road 5 south of Wellesley. Tablet set in west end of north pier on top of pier.

WI-21$COUNTY$046$3$ - DESTROYED

Tablet is set in foundation of a Kitchener Water Commission Building 39.6 m north of centreline of Regional Road 4, approximately 2.9 km west of Regional Road 12. Tablet is on south face of the easterly building, 18 cm east of southwest corner at ground level.

WI-22DHO91-67D
$$362.320$

Brass cap on 5 cm diameter pipe (flush with ground) on the east side of Regional Road 12, being 1.76 km south of the junction of Regional Road 6 and Regional Road 12 and Regional Road 4 (Bleams Road), and 0.48 km north of a yellow brick house (owned by M. Winters) on the east side of Regional Road 12. Bench Mark is 13.1 m east of centreline of Regional Road 12, 0.3 m west of the east right-of-way fence, 0.6 m north of field fence junction and is marked by a yellow and black picket set 0.3 m north of Bench Mark.

WI-23$COUNTY$045$3$ - DESTROYED

Tablet is set in west corner of concrete box culvert under Regional Road 12, 30.5 m north of the intersection of Regional Road 12 and Regional Road 4. Tablet is 0.46 m south of northwest corner, and 21 cm east of west end of culvert.

WI-24$COUNTY$047$3$ - DESTROYED

Tablet is set in northwest corner of a concrete box culvert under Regional Road 4; 121.9 m east from the intersection of Regional Road 4 and Wilmot Township Road 15. Tablet is 0.3 m south of north edge and 0.3 m east of west edge of culvert.

WI-25DHO93-67D
$$363.770$

Metal clad and frame barn (owned by M. Witzel) on the east side of gravel road between Lots 12 and 13, Township of Wilmot, being 0.8 km east of the Public School in the Hamlet of Baden along Old Hwy. 7 and 8B, hence 1.84 km south along gravel road between Lots 12 and 13 and 167.6 m east of centreline of gravel road. Tablet is set horizontally in the south face of concrete foundation, being 10.1 m east of the southwest corner and 27 cm below blockwork.

WI-26DHO65-226$1$
$$333.550$

Concrete culvert under Hwy. 7 and 8, being 0.6 km south along Peel Street from Evangelical United Church in New Hamburg, and hence 1.8 km east along highway. Culvert is 2.7 km west of junction Hwy. 7 and 8 and Foundry Street south of Baden. Tablet is set horizontally in the north face of concrete culvert, being 0.15m west from northeast corner and 0.52m below top of culvert.

WI-27$TOPO$68-U-522$1$
$$334.52$

Bronze tablet in south face of southeast abutment of Hwys. 7 and 8 bridge across Nith River at New Hamburg, 2.4m west from southeast corner of the abutment, and 1.2m below top of the concrete railing on top of abutment.

WI-28DHO65-228A1
$$335.637$

Yellow brick Evangelical United Church in New Hamburg, situated on the east side of Peel Street being 20.7m north of the intersection of Peel Street and Boulee Street. Church is 0.6 km north along Peel Street from junction of Hwy. 7 and 8 and Peel Street. Tablet is set horizontally in the south face of concrete foundation, being 2.23m east of southwest corner, and 0.46m below first course of brickwork.

WI-29DHO65-228$1$
$$336.038$

Concrete and steel bridge carrying Hwy. 7 and 8 over the Nith River, being 0.6 km south along Peel Street from Evangelical United Church in New Hamburg, and hence 57.0m east along Hwy. 7 and 8. Tablet is set horizontally in north face of west abutment, being 5.20m east of northwest corner, and 0.67m below the top of coping.

WI-30$TOPO$670374$1$
$$361.63$

Topographical Survey tablet in a concrete pier 0.3m in diameter, at ground level, north corner of intersection of Hwy. 7 and 8, and Waterloo Regional Road 3, 26.5m northwest from centreline of Hwys. 7 and 8, 10.97m northeast from centreline of Waterloo Regional Road 3 and .67m south from wire fence.

WI-31DHO65-229$
$$358.534$

Two storey yellow brick house (residence of A. Beehler) on the north side of Hwy. 7 and 8, being 0.6 km south from Evangelical United Church in New Hamburg, hence 1.0 km west along highway, thence northerly 304.8m along road at junction of Hwy. 7, 8 and Regional Road 3 and then 152.4m west along gravel lane. Tablet is set horizontally in south face of stone foundation, being 0.46m west of southeast corner, and 0.55m below first course of brickwork.

WI-32$TOPO$670375$1$
$$361.95$

Topographical Survey tablet in a concrete pier 0.3 m in diameter, at ground level, on south side of Old Hwys. 7B and 8B, 0.7 km east from Hwy. No. 7 and 8, 51.8 m south from centreline of Old Hwys. 7B and 8B, 3.9 m east from centreline of a farm laneway, 9.8 m southeast of a telephone pole, 0.37 m west from fence.

WI-33DHO65-203$1$
$$358.434$

Yellow brick split level house (residence of R. Zehr) on the north side of Old Hwy. 7B and 8B, being 0.6km south from Evengelical United Church in New Hamburg, hence 3.1km west along highway to west junction of Hwys. 7 and 8 and 7B, 8B, thence 0.5km northeast along Old Hwy. 7B, 8B. House is situated 30.5m north of centreline of Old Hwy. 7B and 8B. Tablet is set horizontally in west face of concrete foundation, being 8.53m north from southwest corner and 0.82m below the first course of brickwork

WI-34DHO65-227$1$
$$342.487$

One storey red brick building (Hahn Brass Co. - building owned by Amerock Co.) on the north side of Hwy. 7 and 8, being 0.6 km south along Peel Street from Evangelical United Church in New Hamburg, and hence 0.6 km east along Hwy. 7 and 8. Tablet is set horizontally in south face of concrete foundation, being 62m north of centreline of highway; 2.26m east of southwest corner and 24cm below the first course of

brickwork.

WI-35$TOPO$670376$1$
$$361.99$

Standard iron bar with Topographical Survey brass collar, 0.06m above ground level, on top of a knoll, north side of C.N.R. track, 0.7 km northwest form Old Hwys. 7B and 8B, approximately 190m west from centreline of Waterloo Township Road No. 47, 4.3m north from steep drop-off, 0.66m south from wire fence.

WI-36$TOPO$102-F1
$$332.454$

Public library in New Hamburg, bolt in front of north wall, 2.44m from northwest corner and in second course of stonework below watertable course.

WI-37$TOPO$670378$1$
$$346.31$

Topographical Survey tablet in a concrete pier 0.3m in diameter, at ground level, on north side of Arnold Street, 0.4 km east of Waterloo Street, New Hamburg, 45.3m northwest from blue water tower, 38.7m west from fire hydrant, 14.2m south (slope distance) from most southerly C.N.R. track, about 2.0m southwest from telephone pole.

WI-38DHO90-67D
$$358.707$

Two storey grey brick house (owned by F. Salzman) on the west side of Regional Road 12 being 0.8 km south of the junction of Regional Road 6 and Regional Road 12 in Petersburg, 2.2 km north of the junction of Regional Road 12 and Regional Road 4 (Bleams Road) and 11.9m west of centreline of Road No. 1. Tablet is set horizontally in the north face of stone foundation being 5.18m east of the northwest corner and 0.18m below brickwork.

WI-39DHO88-67$1$
$$363.926$

One storey frame red insulbrick house (owned by H. MacCullan) on west side of gravel road between Townships of Waterloo and Wilmot being 3.4 km east of Emmanuel Lutheran Church in Hamlet of Petersburg along Regional Road 6, hence 1.3 km south along road between Townships, also being 1.4 km north along Township Road from Regional Road 4 (Bleams Road) at Mannheim, and is 25.0m west of centreline of gravel road. Tablet is set horizontally in the south face of concrete foundation being 4.08m west of southeast corner and 0.18m below siding.

WI-40DHO89-67$1$

$$371.397$

One storey yellow brick house (owned by W. Snyder) on west side of gravel road between Townships of Waterloo and Wilmot, being 3.4 km east of the Emmanuel Lutheran Church in the Hamlet of Petersburg along Regional Road 6, hence 2.0 km south along road between Townships, also being 1.0 km north along Township Road from Regional Road 4 (Bleams Road) at Mannheim, and is 36.6m west of centreline of gravel road. Tablet is set horizontally in west (rear) face of concrete foundation being 0.18m north of southwest corner and 0.76m below brickwork (at ground level).

WI-41$TOPO$670087$1$
$$402.03$

Topographical Survey tablet in a concrete pier 0.3m in diameter, at ground level, on south side of Erb Street, 102.7m northeast from Township Road 41, 12.8m southeast from centreline of Erb Street, 3.8m east from northeast corner of hydro tower, 2.1m north of fence.

WI-42$TOPO$670077$1$
$$361.25$

Topographical Survey tablet in a concrete pier 0.3m in diameter and at ground level, east side of Mannheim Road, 0.3 km south of Township Road 41, on top of a 4.0m bank, 58.0m north from northeast corner of a bungalow with light coloured roof, 54.4m north-northeast from northwest corner of the same bungalow, 31.7m southeast from a telephone pole, 13.1m east from centreline of the road.

WI-43$RMW364$3$
$$316.314$

Tablet set horizontally in concrete foundation of Weber Castle Building Centre on south side of New Dundee Road. Tablet is set on west side of building at north end at exit door, 0.2 metres below 1st row of concrete block wall.

WI-44$RMW365$3$
$$314.584$

Tablet set horizontally in south face of concrete headwall on north side of bridge over creek passing under New Dundee Road. Tablet is on east end of wall under bracket for steel handrail at west end of steel guide rail

WI-45$RMW366$3$
$$329.342$

Tablet set horizontally in concrete foundation wall on north side of brick building in New

Dundee Cemetery on east side of Regional Road 12 north of New Dundee. Tablet is set 0.3 metres east of northwest corner 0.2 metres below 1st course of brick.

WI-46$RMW367$3$
$$339.265$

Tablet set horizontally in concrete support for hydro pole with steel risers on side of pole at north side of driveway to brick hydro station inside chain link fence line. Tablet set in south face of support base.

WI-47$RMW368$3$
$$326.425$

Tablet is set horizontally in east end of concrete box culvert carrying stream under Regional Road 12, approximately 200 metres south of intersection of Regional Road 2. Tablet is 0.1 metres below top of culvert and 0.1 metres south of northeast corner.

WI-48$RMW369$3$
$$347.713$

Tablet is set horizontally in west face of concrete base of bell junction box no. 201-1, 176-1 on east side of Regional Road 12 and south of Wilmot Township Road 6. Tablet is 0.1 metres below top of base and 0.1 metres north of southwest corner of base.

WI-49$RMW371$3$
$$365.566$

Tablet is set horizontally in concrete retaining wall along top of bridge carrying Regional Road 12 over Highway 7/8. Tablet is set in west face on south end of wall at end of steel guide rail, 0.2 metres above chamfer and 0.4 metres north of south end of wall.

Notes
Original data received from Region of Waterloo Survey Map book

MUNICIPAL CONSENT REQUIREMENTS MANUAL

TABLE OF CONTENTS

1.0 INTRODUCTION

A Municipal Consent is the municipal authorization for a utility company, and/or corporation, to occupy a specific location above or below ground within the Township rights-of-way. Standard utility corridors and alignments have been established to avoid conflicts in the planning of projects by various utilities occupying the Township's rights-of-way and to minimize the impact of proposed work on the adjacent infrastructure. Municipal Consents are only issued to utility companies, commissions, agencies and private Applicants who have the authority to construct, operate and maintain their infrastructure within the right-of-way as established through legislation, terms of an Agreement with the Township, or a Municipal Access Agreement.

All utility work, with a few exceptions, within rights-of-way requires Municipal Consent (MC) and a Right-of-Way Work Permit (ROWP) from the Township's Public Work and Engineering Department, with the exception of Emergency Works. A ROWP for utility works will not be granted until MC is granted by the Public Works and Engineering Department. The Applicant understands and agrees that in making an application for MC the Applicant agrees to abide by the terms and conditions of the MC and Municipal Consent Requirement Manual.

The approval of a MC is valid for a period of one year from the date of issuance. If the work is not completed in its entirety within the one-year period, the Applicant must reapply for consent to locate the remaining work within the right-of-way.

2.0 ORDER OF PRECEDENCE

In the event of any inconsistency or conflict in the contents of the following documents, such documents shall take precedence and govern in the following order:

1. Federal and Provincial legislation, including Municipal Access Agreements (MAA) and Franchise Agreements.
2. Township of Wilmot By-Laws
3. Municipal Consent Acceptance
4. Municipal Consent Manual
5. Township Infrastructure Manual

3.0 DEFINITIONS

"Applicant" means any utility company, commission, agency, municipal department or private party applying for Municipal Consent to gain acceptance for the placement of apparatus within the Township of Wilmot's Public Road Allowance.

"Emergency Work" means work that must be complete immediately because health, safety or the provision of essential services is endangered. This emergency work could result from but not limited to a broken watermain, gas line break or damaged hydro lines.

"Municipal Consent" means the approval of a comprehensive submission which involves a formal drawing submission on the placement of apparatus within the Township's road allowance which has been approved by the Township Public Works and Engineering Department. "Municipal Consent" does not allow work to take place on the Right of Way of any Township Roads.

"Plant" means any poles, cables, pipes, conduits, pedestals, antennas, vaults, support structures or any other similar facilities or structures.

"Public Road Allowance" means the surface of, as well as the spaces above and below public road allowances.

"Right of Way Work Permit" means a permit issued by the Township of Wilmot's Public Works and Engineering Department for the purpose of Authorizing the commencement of all work taking place within the Township road allowance.

"Work" means the installation, maintenance, repair, replacement, extension or operation of any Plant in a public road allowance.

4.0 GENERAL REQUIREMENTS

In making an application for an installation within the road allowance, the applicant must agree to the following, but not limited to:

- If the work arising out of an application does not commence within six (6) months of the issuance of the consent, the applicant will be required to apply for an extension of the municipal consent;
- A ROWP must be issued prior to the commencement of work on the Township Road Allowance; and
- The applicant shall provide as-constructed or as-recorded drawings of the completed work to the Public Works and Engineering Department, as set out in this document and / or the attached covering acceptance letter for the Municipal Consent.

5.0 WORK PERMITTED WITHOUT MC

The following types of work require only a ROWP:

- Emergency work required to maintain or restore existing service;
- Exploratory work to investigate existing Plant condition;

All other types of work require both a MC and a ROWP including:

- installing new plant
- Repair of existing Plant (same horizontal and vertical location);
- making additions or upgrades/alterations to existing plant
- excavating, trenchless work within the right-of way

- Any service drop not requiring the removal, relocation or alteration of any adjacent infrastructure. Service drops crossing the pavement structure shall conform to the requirements of a long service drop. Wherever possible, services and service connection to property line shall be designed and constructed directly in front of the customer being serviced, perpendicular to the roadway. Service drops shall not be a Temporary Connection, nor of a length greater than one (1) metre within the Service Corridor

5.1 Emergency Work

Emergency work is permitted prior to submission of a ROWP Application. The completed ROWP Application must be submitted to the Public Works and Engineering Department on the same day the work is commenced, or if the Township offices are closed, no later than the start of the next working day. If the installation of new or additional plant is required for the emergency repair, a MC Application must be submitted to the Public Works and Engineering Department within 5 business days of the work commencement.

5.2 Service Drops

A ROWP must be obtained from the Engineering Department prior to installing any service drop. Wherever possible, services and service connection to property line shall be designed and constructed directly in front of the customer being serviced, perpendicular to the roadway.

6.0 RIGHT OF WAY WORK PERMITS

Prior to the commencement of work on the Right-of-Way, a ROWP is to be obtained from the Public Works and Engineering Department. The issuance of a ROWP to make an installation within the right-of-way does not relieve the Applicant of the responsibility to ensure that all affected parties are notified of the work and that the appropriate locates and clearances are obtained prior to commencing any installation. As a condition of the ROWP the Applicant may be required to agree to notify, in writing, all existing property owners within the limits of the proposed work. The notice shall include but not limited to a description and rationale for the work, approximate start date, duration of the work, any access restrictions and service interruptions, and provide contact information.

7.0 IDENTIFICATION OF CAPITAL WORKS AND BUDGET PLANNING

All utility companies, commissions, agencies and private Applicants which have the authority to construct, operate and maintain plant within the right-of-way shall submit a forecasted capital projects schedule on an annual basis to the Public Works and Engineering Department as outlined within the terms of the Municipal Access Agreement, Franchise Agreement, or as requested. The schedule will be used to coordinate forecasted capital projects with the Township of Wilmot projects. The Applicant shall use the similar project references, where feasibly, from the forecasted capital projects schedule to the MC form to assist in coordinating review with Township capital projects.

8.0 MUNICIPAL CONSENT APPLICATION

Applications for MC shall be made on the standard MC Application Form on the Township's website. The MC Application Form shall be completed in its entirety and be submitted to the address below;

Attention; Engineering Technician
Engineering Department
60 Snyder's Road West
Baden, ON N3A 1A1
engineering@wilmot.ca
(519) 634 8444 Ext. 250

8.1 Submission Package Requirements

The submission package shall include but not limited to:

- One copy of the application form, completed in its entirety.
- One copy of the detailed design drawings, prepared in accordance with the requirements identified in this document.
- One copy of the required sign-offs from impacted parties, where applicable.
- Full fees, where applicable.

8.2 Application Drawings Requirements

- The scale of the design drawings shall be in accordance with the guidelines outlined in Table 1 Guidelines for Drawing Scale and Units.
- The maximum size of any application drawing shall be ARCH D (610mm × 914mm). The minimum size of any application drawing shall be LETTER (216mm x 279 mm).

TABLE 1			
Density of Existing Plant	**Horizontal Scale (Plan)**	**Vertical Scale (Profile)**	**Units**
Low	1:500	1:50	Metric
High	1:250	1:50	Metric

Note: The maximum scale of any application drawing shall be 1:500.

The following information, but not limited to, shall be accurately shown on the application drawings:

- Direction North Arrow, Legend, and Scale;
- Street Names and Municipal Address;

- Property Lines, Right-of-way Limits and Easement Limits;
- Driveways, Edge of Pavement, and Curbs;
- Guide Rail or Cable, Sidewalks, Fencing, Mature Trees with Dripline; Hydro Poles
- Outlines of adjacent surface and subsurface structures; including diameter and flow direction of pipes if applicable. For the purpose of preparing the application drawings, "adjacent surface and subsurface structures" and "adjacent Plant" shall mean infrastructure that may be impacted by the proposed work or is located less than the minimum clearance distances specified in Appendix 'A';
- Location and Depth of Ditches;
- Description, Location and Dimensions of Existing Adjacent Plant;
- Description, Location and Dimensions of Proposed Plant;
- Show property lines and all private features 15 metres from property line;
- All references to utility depths shall be based on geodetic elevations (See Infrastructure Standards Specification Manual);
- Sign off by the other Utilities with respect to existing location of their Plant, location of proposed Plant by the Applicant and no conflict with future undertakings;
- All dimensions pertaining to the location existing and proposed Plant shall be referenced to the current and/or proposed property lines or Right-of-way limits;
- The drawing shall be greyscale with bold distinct line types to distinguish between types of proposed plant (ie. EP, C/G, SAN, WM, STM, HP).

Where required under the guidelines established by the Professional Engineers of Ontario, application drawings shall be signed and sealed by a Professional Engineer.

8.3 Pre-Application Review

To avoid the need for redesigns and resubmissions, and to reduce review time, the reviewer will, if necessary, within a reasonable time and at a cost to the Applicant, attend one site meeting and conduct a preliminary review of the proposal before the Applicant finalizes the design and submits the MC Application.

8.4 Changes to the Approval

Any request for changes to an accepted MC drawing must be reviewed and accepted by the Public Works and Engineering Department. Depending on the nature and extent of the requested change, the Applicant may be required to:

- meet with the public Works and Engineering Department in the field to review the proposed change
- submit, in writing, an explanation of the proposed change
- submit a revised drawing highlighting the proposed change
- obtain sign-off from adjacent owners of affected above ground plant (if applicable)

8.5 Projects with Multiple Drawing

The Applicant may choose to 'bundle' several drawings together as a single application for projects which involve continuous Plant installation over large distances. An application being a request for a Municipal Consent for work of a continuous nature (no more than one hundred (100) meters apart) on the Right-of-Way. For clarity, a separate application and Municipal Consent will be required for any work not within one hundred (100) meters of the initial Work being undertaken.

For larger plant upgrade projects the fee for applications with multiple drawings is subject to the discretion of the Engineering Department. In the absence of any specific instructions, the application will be reviewed as a whole with all drawings being accepted simultaneously or all drawings being declined.

8.6 Cancelled Projects

The Public Works and Engineering Department must be notified of any cancelled projects for which a MC Application has been submitted or a MC has been issued.

8.7 Incomplete or Non-Approved Applications

MC Applications that are not in strict conformance with the MC Requirements, particularly with regards to the drawing standards, will not be accepted. Applications submitted without the full MC fee will not be reviewed until the full MC fee is received. In the event the application is not accepted, the Applicant will be contacted by the Public Works and Engineering Department via e-mail to the address specified on the application. The Applicant will be advised of the general deficiencies of the application. If the Applicant does not address the deficiencies identified within two months time, the application form will be returned to the Applicant together with a covering letter from the Public Works and Engineering Department indicating that a new application is required and any fees have been forfeited and additional resubmission fees are required.

8.8 Circulation and Sign-Offs

Prior to submitting an application, the Applicant is advised to circulate drawings of their proposed work to all utility companies, agencies and commissions that may be impacted by the work. The following should be considered if circulated:

- Marked up the Applicant's drawing or provided the Applicant with an up-to-date location certificate of that party's infrastructure within the limits of the proposed work.
- Communicated all its requirements to the Applicant; including plant support requirements, 3rd party inspections, separation requirements etc.
- Does not object to the proposed work as described in the application.
- Investigated and declined a joint-build venture with the Applicant.

8.9 Application Review Period

Applications shall be submitted to the Engineering Department at least 30 business days prior to the planned date of commencing the work. The date of application will be the date on which the complete and compliant application is received by the Public Works and Engineering Department. Applications will normally be processed within 20 business days. The time required for review will vary depending on the nature, size and complexity of the proposed work and the completeness and clarity of the application form and drawings as well as staff resources and workload.

9.0 ACCEPTANCE PROCEDURES

Upon completion of the MC application review, a copy of the accepted application will be emailed to the Applicants address as listed on the application. The issuance of a MC by the Township of Wilmot does not relieve the Applicant of the responsibility to ensure that the notification requirements of the procedures manual are properly carried out and that the appropriate locates, insurances and clearances etc. are obtained prior to acquiring an ROWP and commencing the installation of the proposed work.

9.1 Review of Applications for Work in or under New Road Surfaces

To ensure the long-term sustainability of the Township's infrastructure, the Township dictates a moratorium on all new or recently reconstructed streets. The moratorium ensures that the integrity of the pavement structure is protected and also serves to minimize the disruptions and inconvenience to the public resulting from repeated construction activity. In the event an application is received for work in or under any infrastructure that is 15 years old or less, the Public Works and Engineering Department shall undertake a comprehensive review of the proposed working area, type and methods of construction to mitigate the potential negative impacts. This includes construction or reconstruction of roads, curbs, sidewalks, and boulevards, full resurfacing of streets including base repairs. The comprehensive review shall include a meeting with the Applicant to discuss the following without limitations:

- Alternative means of meeting the Applicant's servicing objectives by investigating alternate routes, evaluation of existing conduit, reactivation of abandoned Plant, utilization of abandoned conduits, trenchless technologies, etc.;
- Provide justification for proposed methods of installation if deemed harmful to the new pavement structure;
- Roadway restoration details;
- Additional costs for work in a newly constructed corridor.

9.2 Disputes

In the event of any dispute regarding the review of a specific application, the Director of Public Works & Engineering shall make the final determination.

10.0 DESIGN GUIDELINES

10.1 Alignments

Installation of plant shall follow the alignments shown in the Township of Wilmot Standard Drawings; or at the discretion of the Township. The Township, in its sole discretion, may direct the Applicant to propose an alternate alignment if, in the opinion of the Public Works and Engineering Department, the proposed alignment is not in the best interests of the efficient and organized usage of the Right-of-way.

10.2 Roadway Crossing

Wherever possible, proposed roadway crossing shall be perpendicular to the roadway. Roadway crossings within intersections should be avoided. All roadway crossings shall be in conduit adequately sized for future anticipated growth.

10.3 Clearance from Other Plant

Horizontal and vertical clearances shall meet standard vertical and horizontal clearances and / or 3rd party requirements/standards at the discretion of the Public Works and Engineering Department. The indicated clearances are minimums and shall be interpreted to be measured from the outermost edge of the existing Plant to the outermost edge of the proposed Plant. Any encasement, steel plating or other non-excavateable material shall be considered to be part of the proposed Plant and must meet the required clearance from existing Plant. Exemptions from the minimum clearances may be accepted, at the discretion of the affected Plant owners and with the acceptance of the Public Works and Engineering Department. As a minimum, any application for exemption will require written consent from the affected Plant owners giving explicit permission for the Applicant to reduce the clearance. To ensure the acceptability of the proposed reduction in clearance, the Applicant may be required to submit a suitably scaled detailed drawing identifying the existing and proposed Plant clearances.

10.4 Depth of Cover

The depth of cover for all installations within the boulevard shall be a minimum of 1.0 metre below the lowest elevation of either the centreline of trench or the centreline of roadway. The depth of cover for all installations within the pavement structure shall be a minimum of 1.0 metre below the lowest elevation of either the centreline of trench or the centreline of roadway. The depths listed are minimums. Where deemed necessary to accommodate other existing Plant or future work, additional depth of cover may be required at the application review stage or during construction at the sole discretion of the Public Works and Engineering Department. Where an Applicant demonstrates that the depth requirements cannot be met, exceptions may be accepted on a case-by-case basis. Applicants should contact the Public Works and Engineering Department for such an exemption at the planning stage of their project, prior to submission of a MC Application. Under no circumstances shall Plant be installed shallower than the minimum depths indicated without specific written consent from the Public Works and Engineering Department. For buried structures, including, but not limited to, vaults and chambers, the top of the structure shall conform to the minimum depths described above. Where such a structure requires access, it shall be designed so that only the access protrudes to the surface.

10.5 Structures with Surface Access

Any new buried structures which have surface access, with the exception of vaults where the structure roof is monolithic and flush with the surrounding finish grade shall be constructed with the ability for fine adjustment of their elevation to accommodate future changes to surface grading and structurally

designed for highway traffic loading. Structures may not be in sidewalks / asphalt trails. If any settlement occurs the utility company shall repair.

10.6 Common Trenches

To make effective use of the limited space in the right-of-way, the Public Works and Engineering Department may request that utility companies planning installations in close proximity to one another, or to service the same customer, enter into an agreement to share a common trench. Where the parties have agreed to construct in a common trench, one of the utility companies shall be designated as the Applicant for purposes of obtaining a MC, adherence to permit conditions, completion of restoration, billing process, and submission of as-constructed drawings. Common trenches shall be clearly identified, including the names of all participating utility companies, on both the application and the drawings.

10.7 Above-Ground Plant

Applications for work that include an above-ground Plant shall include consideration to reducing the negative visual impact to passing motorists, pedestrians and adjacent property owners while still allowing the Applicant to freely access and properly service the Plant and provide its services to its customers. Applications shall describe the proposed aesthetic treatment which will be reviewed by the Public Works and Engineering Department for suitability and potential impact. Examples of aesthetic treatments include, but are not limited to: placement in locations of minimal visual impact; landscaping around the Plant; painting the Plant; decorative covers; placement of Plant behind existing physical features. The Applicant shall be responsible for the maintenance of any material aesthetic treatment such as paint or coverings to the satisfaction of the Township of Wilmot as outlined within the terms of Municipal Access Agreements, and / or on a case by case basis. If the proposed location of the above ground Plant falls within the boundaries of a Board of Trade (BoT) area, the Applicant shall notify the BoT, in writing, and outline the nature of the work, clearly describing the size, appearance and location of the proposed above ground Plant. The notification must also include the Applicant's contact information. The Applicant is to ensure that any objections regarding the proposed Plant and its location are addressed prior to submitting the application. A copy of the notification shall be submitted with the application. Where a proposed above-ground installation or the proposed aesthetic treatment is not satisfactory, the Public Works and Engineering Department will provide the Applicant with a detailed written explanation of the reason for denial of the permit application.

11.0 INSTALLATION ON TOWNSHIP OWNED LANDS

Other than ROW's Installations on Township owned land other than streets require the prior approval of the department that has jurisdiction over that land. Any easement documents or licenses that may be required by the Engineering Department for work in these locations shall be submitted with the application.

12.0 REGULATORY AUTHORITY APPROVALS

The Township of Wilmot requires the Applicant to seek approvals from all other applicable regulatory authorities prior to submitting the MC application where applicable.

13.0 IDENTIFICATION OF PLANT

All proposed utility Plants with the exception of cables/conduit shall bear the name and contact of the owner and include such details on the submission drawings. The identification may be in the form of

stickers, imprints, tags, or other appropriate methods not to exceed 50 cm2 . Where pole bases are used, the Applicant shall specify on the submission drawing, each bay of sidewalk poured on top of the pole base to bear a stamp with the name of the pole owner and the text “Pole Base” as a warning that there is buried infrastructure below. Where the sidewalk is designed to be reinforced with rebar, the Applicant shall specify on the submission drawing to include a stamp with the wording ‘Reinforced Bay’.

14.0 ABANDONED/DECOMMISSIONED PLANT

The Applicant shall clearly identify all proposed removal or abandonment of Plant on the drawing. As outlined within the terms of Municipal Access Agreements, Franchise Agreements or other Township requirements, the utility company shall continue to be responsible and liable for all abandoned Plant and any issues that arise as a result of that abandoned Plant until such time that it has been completely removed from the Right-of-Way to the satisfaction of the Public Works and Engineering Department. This responsibility shall include, but not be limited to, providing all available information for any abandoned or decommissioned Plant as part of the Applicant’s response to any request for information by the Township. During Township of Wilmot reconstruction projects, the Township, in its sole discretion, may direct the Applicant to specify complete removal of all existing Plant and to be replaced in coordination with the project.

14.1 Pole Replacement

To ensure the timely removal of redundant poles, any application for the installation of a new pole which is intended to replace an existing pole shall clearly identify all poles to be removed. The maximum time period from the installation of the new pole until removal of existing pole and completion of restoration shall not exceed the term of the MC (12 months). The difference between the existing pole diameter and proposed pole diameter must be labeled.

15.0 INSPECTION

The Applicant shall contact the Public Works and Engineering Department’s designated Engineering Technician specified by the Township of Wilmot MC and ROWP prior to the start of works.

16.0 NON-COMPLIANT INSTALLATIONS

Should any construction begin that is not in strict compliance with the conditions of the permit and this document the permit may be cancelled at the sole discretion of the Engineering Department. Depending on the severity of the infraction, the issuance of new permits for some or all work by the same Applicant may be withheld or delayed, at the sole discretion of the Public Works and Engineering Department, until the infraction has been addressed by the Applicant to the satisfaction of the Public Works and Engineering Department. Where a Plant is found to be installed without a valid permit and/or in a location other than that approved by the Public works and Engineering Department, the Applicant may be required to remove the Plant immediately, at its own expense.

17.0 DOCUMENTS REQUIRED ON-SITE

The Applicant shall ensure that, as a minimum, copies of the following documents are kept on-site at all times and shall make these documents available for viewing immediately upon being requested to do so by the Public Works and Engineering Department or the Township of Wilmot Municipal By-Law Enforcement: • Approved MC and Approved Drawing(’s) • Right-of-way Activity Permit • Notification to

adjacent residences and businesses, where applicable • Notification to BoT, where applicable • Any documents required to be kept on-site under legislation.

18.0 NOTIFICATION OF THE LOCATION OF UNIDENTIFIED PLANT

The Applicant shall immediately notify the Public Works and Engineering Department of any Plant encountered during the course of excavation which was not identified in any of the pre-construction circulations or locates. The Applicant shall contact all other utility companies and make an effort to determine the owner of the unidentified Plant. The Applicant shall include the location, depth, size and material of the unknown Plant, clearly labelled as unidentified existing Plant on the as-constructed drawings submitted for that project.

19.0 TRENCHLESS INSTALLATIONS

Where the work is being undertaken using trenchless installation methods, preservation and protection of existing Plant shall be according to Best Management Practices, 3rd party requirements, or Ontario Provincial Standard Specifications and/or plant utility owner specifications. Minimum horizontal and vertical clearances to existing Plant as specified in Appendix "A" shall be maintained. Clearances shall be measured from the nearest edge of the largest back reamer required to the nearest edge of the facility being paralleled or crossed. Existing underground Plant shall be exposed to verify its horizontal and vertical locations when the bore path comes within 1.0 m horizontally or vertically of the existing facility. Existing Plant shall be exposed by non-destructive methods. The number of pilot holes required to monitor work progress and the proposed location of such pilot holes should be clearly depicted on the application drawing. All pilot holes and any other damage to the street infrastructure shall be restored as per the requirements of ROWP and / or MC acceptance letter, other Township Bylaws, infrastructure Standards, etc.

20.0 BACKFILL AND RESTORATION

Backfilling and restoration shall be carried out in accordance with the conditions of ROWP, MC acceptance letter and / or Engineering Manual, etc.. All restoration shall be completed at the expense of the Applicant.

21.0 AS-CONSTRUCTED/AS-RECORDED DRAWINGS

The Applicant shall submit within 90 days of project completion, as-constructed/as-recorded drawings in PDF and AutoCAD DWG format to the Engineering Department as per the amended version of CSA S250-16. As-constructed submissions shall record accurate installation information and include a cover letter that contains, as a minimum but not limited to, the following:

- Applicant's Name;
- Contractor's Name (where applicable);
- Name of the Project;
- Utility and Township Permit Number;
- Date of Start of Construction;
- Date of Completion of Construction;
- Date of Inspection by Township Engineering Technician;
- Location description and key map;
- Start of warranty date;
- End of warranty date;

- Road Cut/Exploratory Pit pavement degradation in m^2;
- Be certified by a qualified person
- Include the certification noted as follows:

I CERTIFY THAT THIS LOCATION CERTIFICATE DEPICTS THE LOCATION AND CONTENT OF THE CONSTRUCTED PLANT IN ACCORDANCE WITH THE TOWNSHIP OF WILMOT'S MC REQUIREMENTS

If the Applicant does not submit a compliant as-constructed drawing within 90 days of project completion, the Public Works and Engineering Department may, in its sole discretion, arrange for a locator and survey crew to identify, locate and prepare a drawing accurately depicting the location of the Applicant's Plant. All costs associated with this work shall be charged to the Applicant, or deducted from the LC or security deposit. The issuance of new permits may be withheld or delayed, at the sole discretion of the Public Works and Engineering Department, until the required as-constructed drawings have been submitted.

The submitted as-constructed drawings may be used for management of the Right-of-Way and for future information designs. In the event that the actual constructed Plant location differs from that shown on the as-constructed drawing, the Applicant will be held 100 percent responsible, and shall absolve all other occupiers of the street of any responsibility for all damages, liabilities, relocation costs, redesign costs and subsequent delay costs resulting from the Applicant's failure to provide an accurate as-constructed drawing.

22.0 SECURITY DEPOSIT

The Public Works and Engineering Department shall be satisfied that the Applicant has posted sufficient security with the Township of Wilmot as outlined within the terms of Municipal Access Agreements, Franchise Agreements or other Township requirements or as an individual security deposit, to guarantee the performance by the Applicant of its obligations in connection with the proposed work prior to granting acceptance for the MC.

23.0 MUNICIPAL CONSENT / RIGHT OF WAY WORK PERMIT FEES

23.1 Application Fee

The fee for MC Applications and Right of Way work permit shall be in accordance with the Fees and Charges By-Law, per individual application. Applications with multiple drawings or extensive work shall be determined at the discretion of the Public Works and Engineering Department standard practice.

23.2 Construction Fees

If required at the discretion of the Public Works and Engineering Department, Construction fees may be required by the Township. The fee for MC Construction fees shall be in accordance with the current Fees and Charges By-law, (Pavement degradation, inspection, securities, etc) and will be estimated based on hourly rates for staff, vehicles and administrative fees. The fee will be estimated at the time of the MC review and will be required prior to MC acceptance is granted.

24.0 OTHER CONSIDERATIONS

The Applicant shall comply with all applicable Legislation, Township and Region By-Laws, Township Infrastructure Standards and Specifications, including but not limited to:

- Telecommunications Act
- Rulings by the Canadian Radio-television and Telecommunications Commission (CRTC)
- Rulings by the Ontario Energy Board (OEB)
- Right-of-way Work Permit Procedure
- By-laws
- Tree Protection and Preservation

25.0 TOWNSHIP OWNED INFRASTRUCTURE/JOINT USE AGREEMENTS

When the proposed works involves the removal or the replacement of a utility pole that is being utilized for Township of Wilmot infrastructure including but not limited to Street Lighting, Parking Signs, and Public Information Signs, the Applicant shall coordinate with the Public Works and Engineering Department for removal and replacement of the Township Owned infrastructure prior to submitting the application. The Applicant shall identify all Township Owned infrastructures being removed or relocated on the application drawing.

APPENDIX A – RIGHT OF WAY WORK PERMIT FORM

Link - Right-of-WayROW-Work-Permit-Appliaction-Form.pdf (wilmot.ca)

GRAVENHURST
GATEWAY TO MUSKOKA

Sent via Email

April 19, 2022

RE: TOWN OF GRAVENHURST RESOLUTION – FLOATING ACCOMMODATIONS

At the Town of Gravenhurst Committee of the Whole meeting held on April 12, 2022 the following resolution was passed:

> **WHEREAS** the Province is currently consulting with municipalities on the use of floating accommodations;
>
> **AND WHEREAS** public feedback is required to be submitted to the NDMNRF by April 19, 2022;
>
> **THEREFORE BE IT RESOLVED THAT** Administration be directed to submit comments on behalf of the Town of Gravenhurst to include, not limited to:
>
> - qualifications of a "vessel",
> - length (number of days) of time permitted for camping on Crown Land,
> - wastewater management; and
> - lack of infrastructure (ie pumping stations, hygiene amenities) to support floating accommodations within the Town of Gravenhurst;
>
> **AND THAT** Administration be directed to Report to Council on what measures can be implemented to restrict the use of Floating Accommodations within the Town of Gravenhurst;
>
> **AND FINALLY THAT** this motion be circulated to municipalities within the Province of Ontario.

Sincerely,

J.G.

Jacob Galvao
Administrative Clerk II – Legislative Services
Town of Gravenhurst

Sent via Email

April 19, 2022

RE: TOWN OF GRAVENHURST RESOLUTION – RUSSIAN SANCTIONS

At the Town of Gravenhurst Committee of the Whole meeting held on April 12, 2022 the following resolution was passed:

> **WHEREAS** the country of Ukraine has experienced a premeditated and unprovoked invasion by Russia;
>
> **AND WHEREAS** silence is complicity;
>
> **AND WHEREAS** Canada imports hundreds of millions of dollars' worth of goods from Russia each year;
>
> **AND WHEREAS** negative financial impacts upon a country can be used as a means to deter further conflict;
>
> **BE IT THEREFORE RESOLVED THAT** the Correspondence from the Town of Georgina regarding sanctions on Russia be received for information;
>
> **AND THAT** The Town of Gravenhurst unequivocally denounces Russia's unjustifiable war against Ukraine;
>
> **AND THAT** the Town of Gravenhurst supports the sanctions which the Federal government of Canada has thus far imposed on Russia;
>
> **AND THAT** effective immediately and until a time when the sovereignty of Ukraine is once again unchallenged, the Town of Gravenhurst will:
>
> 1) Not purchase any products (ie plywood, fertilizer, steel, furniture or machinery) which can be easily traced to have originated from Russia; and
> 2) Insist that any future contracts for services for the Town of Gravenhurst abide by these same limitations within our municipality;
>
> **AND THAT** upon confirmation that the Belarusian military is engaged within Ukraine that the Town of Gravenhurst apply these limitations upon goods from that country as well;

AND THAT this decision of Gravenhurst Council be forwarded to all other municipalities within Ontario requesting they enact similar measures so that as a united front we can make a noticeable difference.

Sincerely,

J.G.

Jacob Galvao
Administrative Clerk II – Legislative Services
Town of Gravenhurst

GRAVENHURST
GATEWAY TO MUSKOKA

Sent via Email

April 19, 2022

RE: TOWN OF GRAVENHURST RESOLUTION – YEAR OF THE GARDEN

At the Town of Gravenhurst Committee of the Whole meeting held on April 12, 2022 the following resolution was passed:

> **WHEREAS** the Year of the Garden 2022 celebrates the Centennial of Canada's horticulture sector;
>
> **AND WHEREAS** gardens and gardening contribute to the quality of life of our municipality and create safe and healthy places where people can come together;
>
> **AND WHEREAS** the Year of the Garden 2022 highlights and celebrates the important contribution of gardeners, our local gardening organizations, horticultural professionals and local horticultural;
>
> **AND WHEREAS** gardens and gardening have helped us face the challenges of the COVID-19 Pandemic;
>
> **AND WHEREAS** Communities in Bloom, in collaboration with the Canadian Garden Council, invites all municipalities to celebrate the Year of the Garden;
>
> **NOW THEREFORE BE IT RESOLVED THAT** the correspondence from the City of Port Colborne be received for information;
>
> **AND THAT** the Town of Gravenhurst, along with other communities across Canada, celebrate 2022 as the Year of the Garden and recognizes the contribution of gardens and gardening to the development of our country, our Town and the lives of our citizens in terms of health, quality of life and environmental challenges;
>
> **AND FINALLY THAT** a copy of this resolution be provided to all municipalities in Ontario.

3-5 Pineridge Gate Gravenhurst, Ontario P1P 1Z3 **Office:** (705) 687-3412 Fax: (705) 687-7016
info@gravenhurst.ca www.gravenhurst.ca

Sincerely,

J.G.

Jacob Galvao
Administrative Clerk II – Legislative Services
Town of Gravenhurst